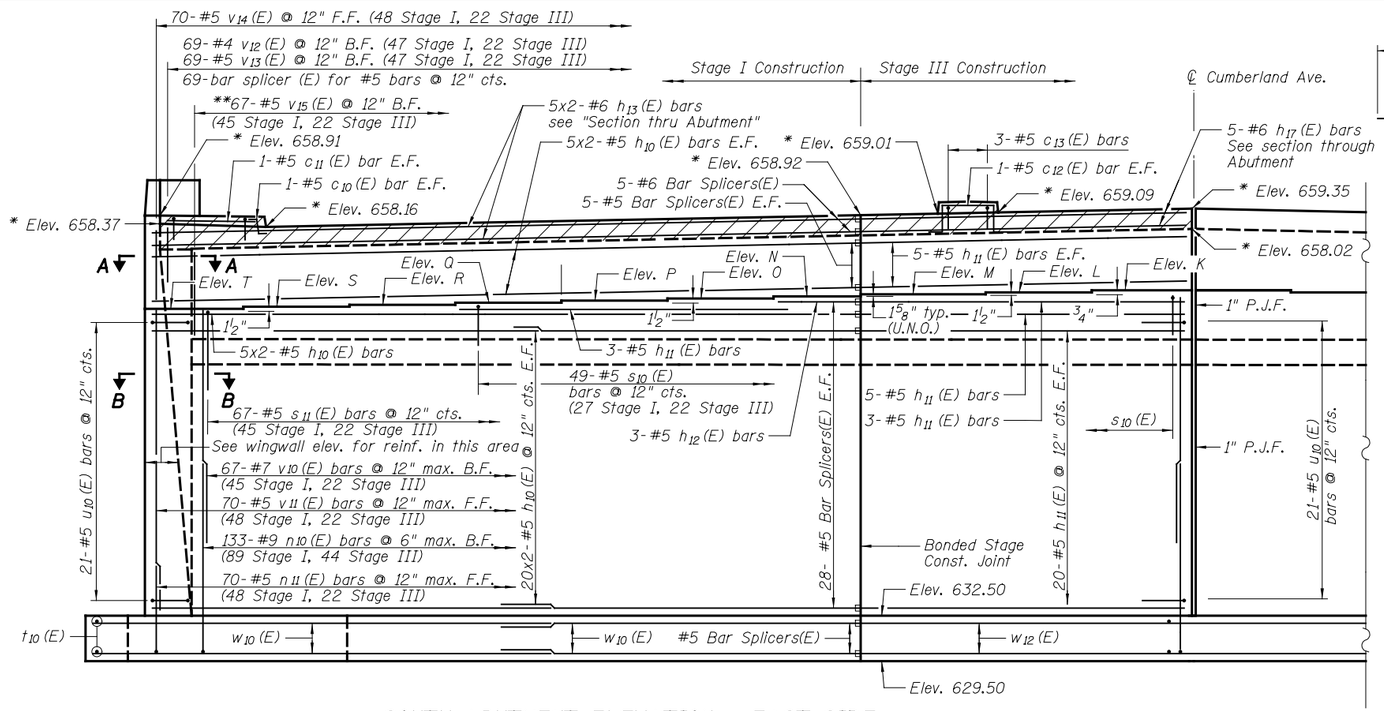

SOUTH ABUTMENT ELEVATION - EAST SIDE

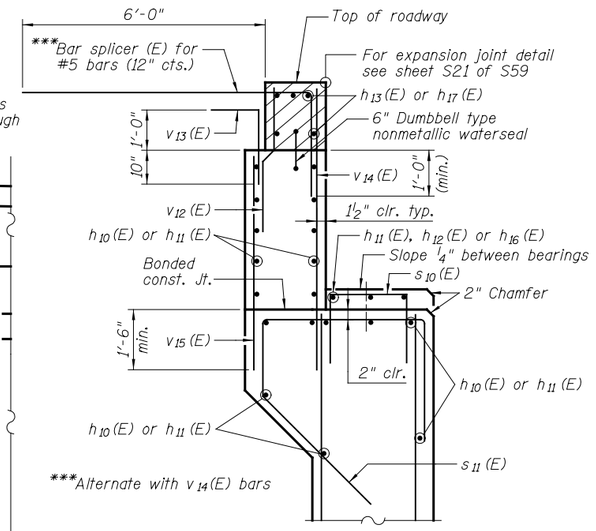

DETAIL 1

BRIDGE SEAT ELEVATIONS

Elev. A	652.66
Elev. B	652.80
Elev. C	652.95
Elev. D	653.09
Elev. E	653.23
Elev. F	653.37
Elev. G	653.52
Elev. H	653.66
Elev. I	653.80
Elev. J	653.87
Elev. K	653.87
Elev. L	653.81
Elev. M	653.68
Elev. N	653.54
Elev. O	653.40
Elev. P	653.27
Elev. Q	653.13
Elev. R	652.99
Elev. S	652.85
Elev. T	652.72

MIN. BAR LAP

#4 bar = 2'-4"
#5 bar = 2'-11"
#6 bar = 3'-10"
#7 bar = 5'-2"

Notes:

Space reinforcement in cap to miss anchor bolts.

Pour steps monolithically with cap.

Bars indicated thus 5x2-#5 etc. indicates 5 lines of bars with 2 lengths per line.

For Bill of Material see sheet S36 of S59.

For Sections A-A & B-B see sheet S36 of S59.

F.F. = Front Face
B.F. = Back Face
E.F. = Each Face

Concrete sealer shall be applied to the exposed surface of the backwall & entire bridge seat.

Hatched area to be poured after superstructure forms have been removed. Quantities of concrete included with concrete superstructure.

** Order v15(E) bars full length, cut to fit variable backwall height and use remainder of bars in opposite end.

*** 5-4" Dia. Sleeves for Electrical Lighting Conduits. Cost included with the pay item "Concrete Structures". See Electrical Plans for details.

* Elevations shown are at back of abutment (see "Section thru Abutment")

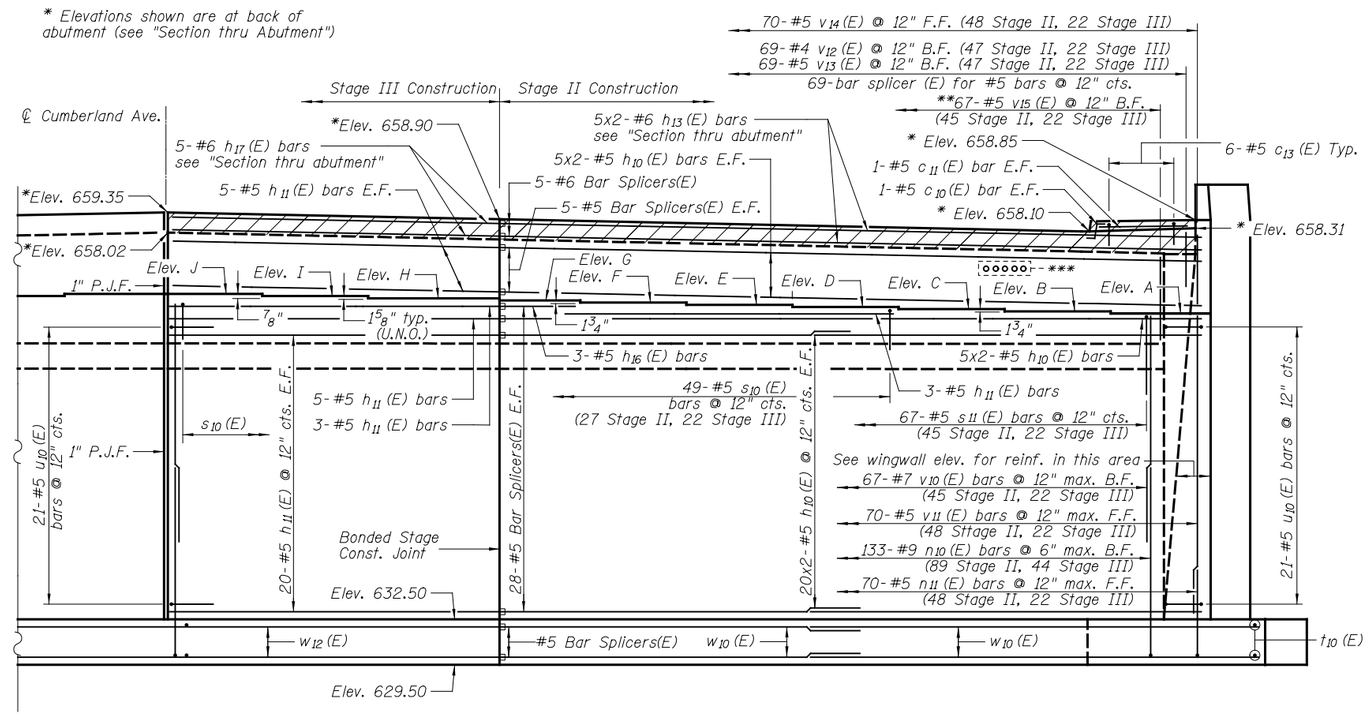

SOUTH ABUTMENT ELEVATION - WEST SIDE

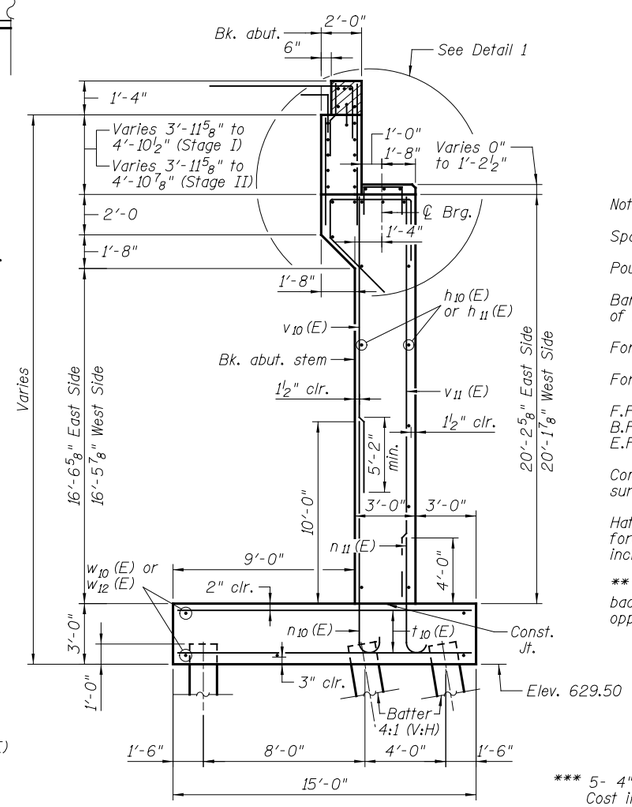

SECTION THRU ABUTMENT

PATRICK ENGINEERING INC. 4970 VARSITY DRIVE LISLE, IL 60532 patrickengineering.com	USER NAME =	DESIGNED - RDW	REVISED	STATE OF ILLINOIS DEPARTMENT OF TRANSPORTATION
		DRAWN - DM	REVISED	
	PLOT SCALE =	CHECKED - AD	REVISED	
	PLOT DATE =	DATE - 2/18/2013	REVISED	

SOUTH ABUTMENT ELEVATION
STRUCTURE NO. 016-1250

SCALE: NONE — SHEET NO. S34 OF S59 SHEETS

F.A.U RTE.	SECTION	COUNTY	TOTAL SHEETS	SHEET NO.
2746	1616B	COOK	404	303
		CONTRACT NO. 60J14		
		ILLINOIS FED. AID PROJECT		

Q:\IDOT\21050_006_CumberlandAve\Drawings\CADD Sheets\D160J14-sht-tsl-SouthAbut2.dgn