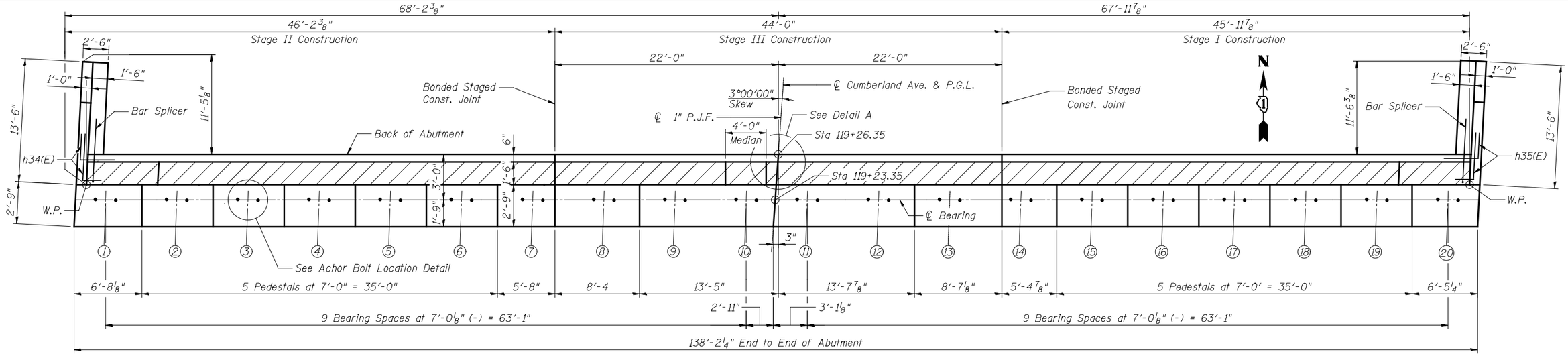

TOP VIEW

(Parapets not shown)

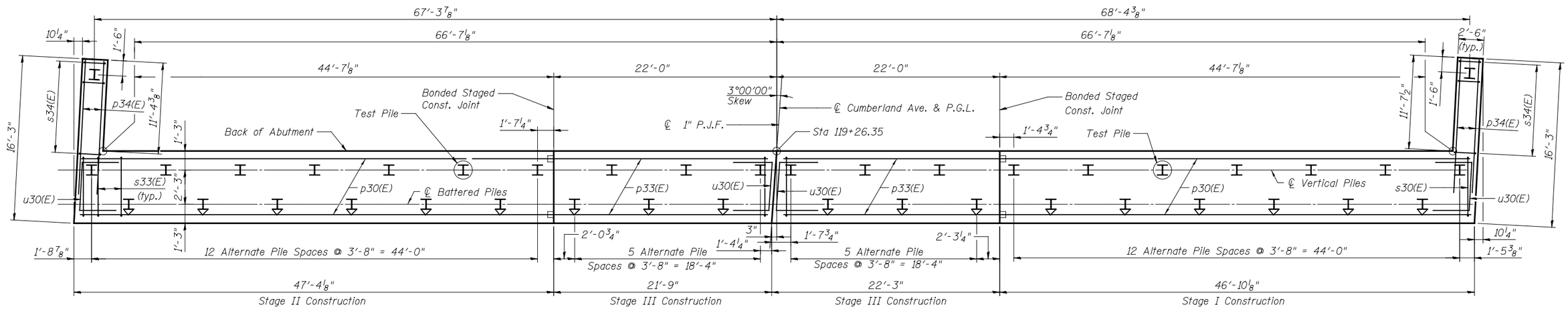

PLAN-PILE CAP

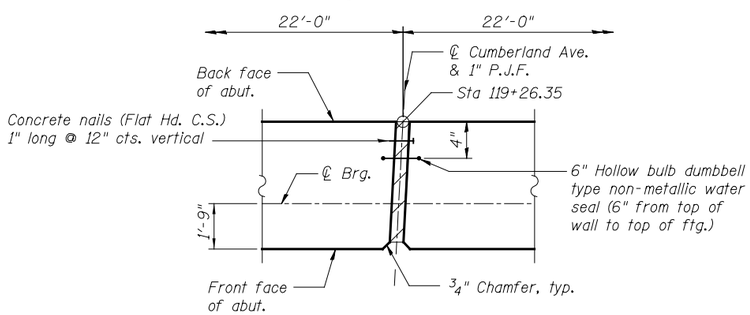

DETAIL A

(Section below brg. seat shown, above similar)

PILE DATA

Type:	HP 12x53
Nominal Required Bearing:	418 Kips
Factored Resistance Available:	165 Kips
Estimated Length:	35 ft.
No. Production Piles:	38
No. Test Piles:	2

⤓ : Indicates battered pile.

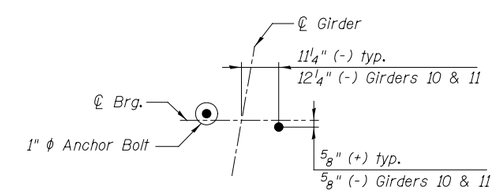

ANCHOR BOLTS LOCATION

PATRICK ENGINEERING INC. 4970 VARSITY DRIVE LISLE, IL 60532 patrickengineering.com	USER NAME =	DESIGNED - AD	REVISED
		DRAWN - AD	REVISED
	PLOT SCALE =	CHECKED - RDW	REVISED
	PLOT DATE =	DATE - 2/18/2013	REVISED

STATE OF ILLINOIS
DEPARTMENT OF TRANSPORTATION

NORTH ABUTMENT PLAN
STRUCTURE NO. 016-1250

SCALE: NONE | SHEET NO. S37 OF S59 SHEETS

F.A.U RTE.	SECTION	COUNTY	TOTAL SHEETS	SHEET NO.
2746	1616B	COOK	404	306
		CONTRACT NO. 60J14		
		ILLINOIS FED. AID PROJECT		

Q:\IDOT\21050_006_CumberlandAve\Drawings\CADD Sheets\D160J14-sht-tsl-north-Abut-1.dgn