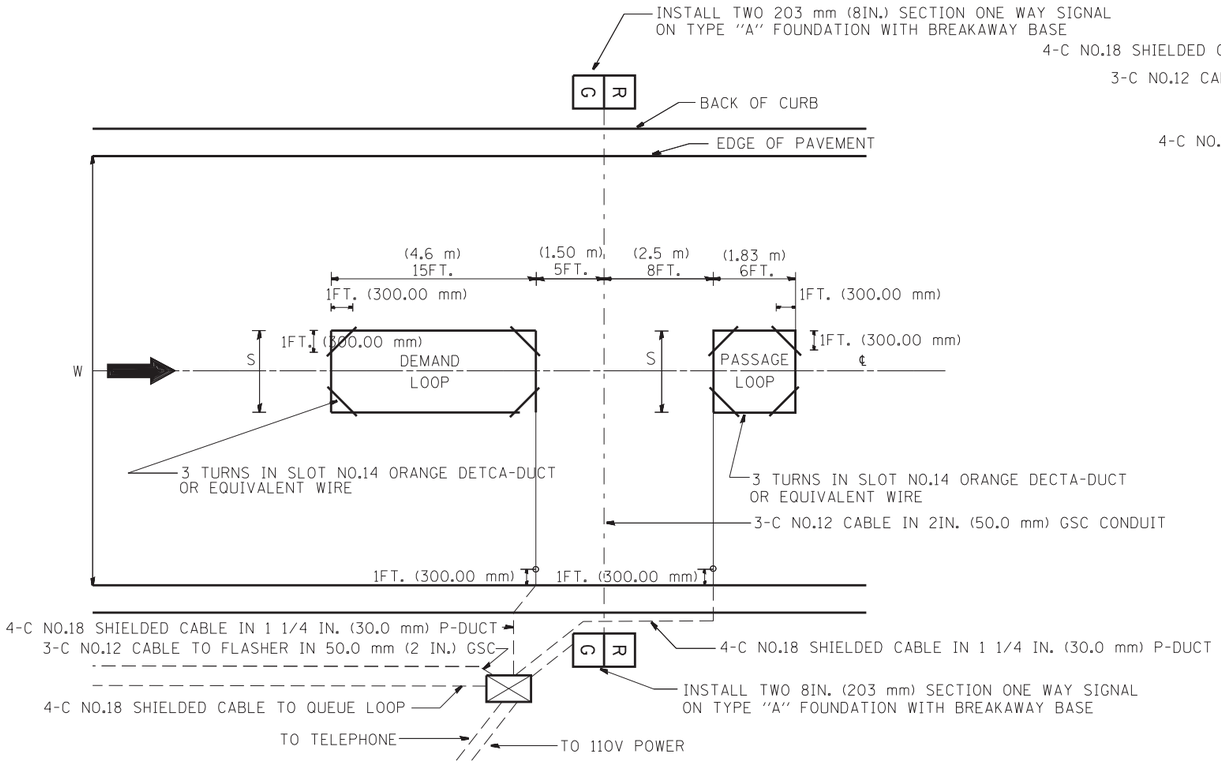

TYPICAL SIGNAL AND LOOP LAYOUT (TYPE I)

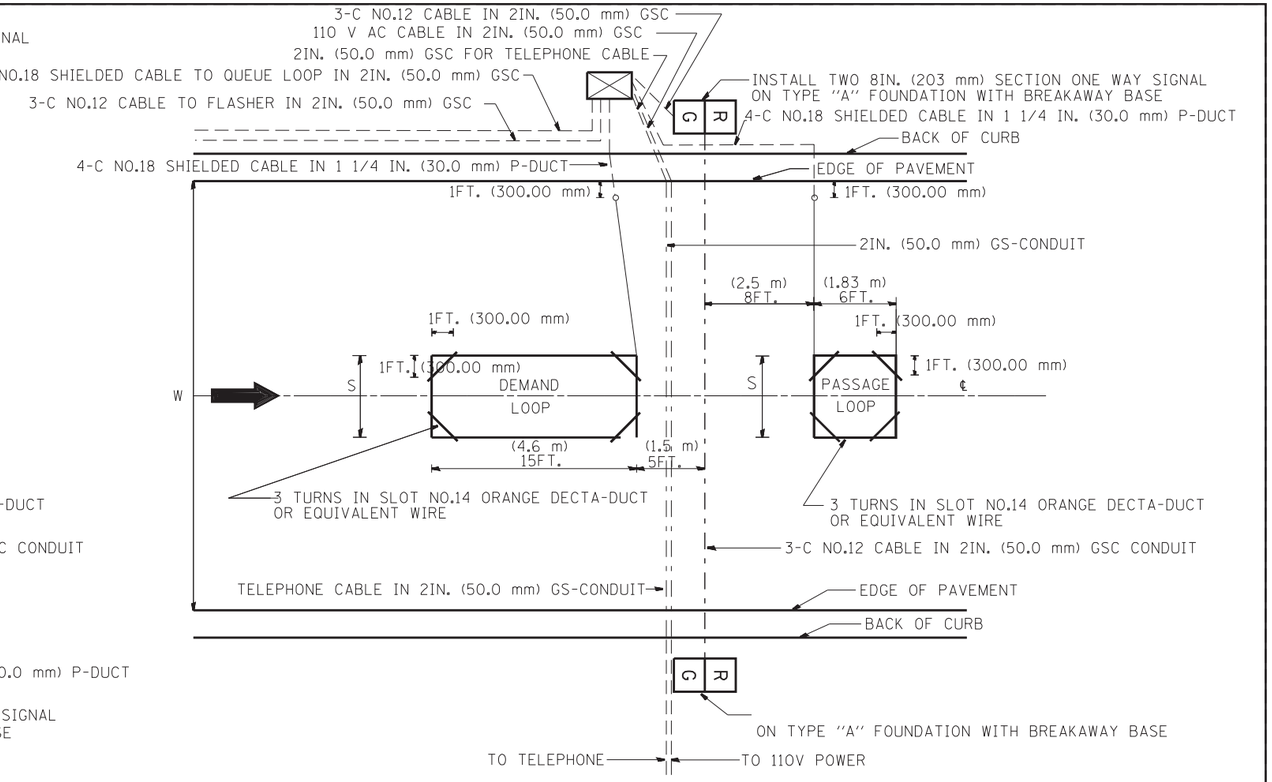

TYPICAL SIGNAL AND LOOP LAYOUT (TYPE II)

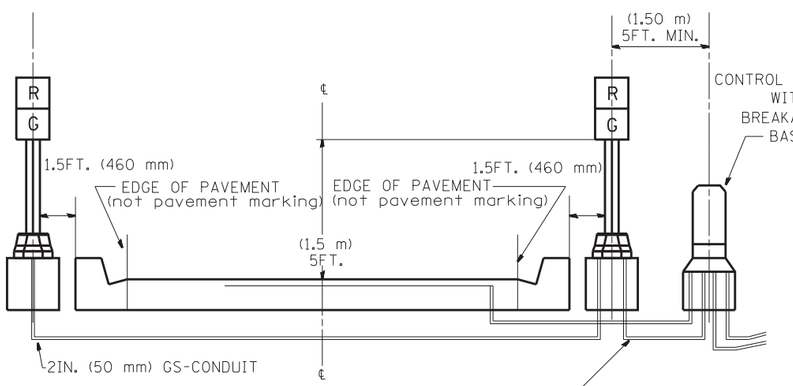

SECTION

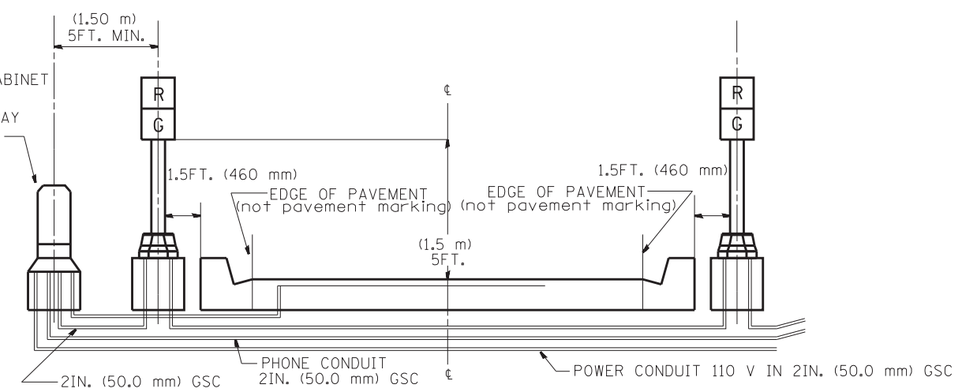

SECTION

TABLE 1	
WIDTH (W)	WIDTH (S)
12′ (3.7 m)	8′ (2.5 m)
13′ (4.0 m)	9′ (2.8 m)
14′ (4.3 m)	10′ (3.1 m)
15′ (4.6 m)	11′ (3.4 m)
16′ (4.9 m)	12′ (3.7 m)
17′ (5.2 m)	13′ (4.0 m)
18′ (5.5 m)	14′ (4.3 m)
19′ (5.8 m)	15′ (4.6 m)
20′ (6.1 m)	18′ (4.9 m)
21′ (6.4 m)	17′ (5.2 m)
22′ (6.7 m)	18′ (5.5 m)
23′ (7.0 m)	19′ (5.8 m)
24′ (7.3 m)	20′ (6.1 m)
25′ (7.6 m)	21′ (6.4 m)

NOTES:

1. EACH LOOP SHALL BE SPLICED TO A 4-C NO.18 TWISTED SHIELDED LEAD IN WHEN 150FT. (45 m) OR MORE FROM CABINET.
2. LOOPS SHALL BE SPLICED IN HANDHOLES ONLY, OTHERWISE WRITTEN PERMISSION SHALL BE OBTAINED FROM TSC ENGINEER.
3. LOOPS SHALL NOT BE SPLICED IN SERIES.
4. EACH LOOP LEAD IN SHALL BE IDENTIFIED AND PERMANENTLY COLOR CODED IN THE COREHOLE, HANDHOLE & CABINETS THRU WHICH THEY ENTER OR PASS AND TAGGED WITH THE CORRECT NOMENCLATURES.

FILE NAME = c:\pw_work\pwidot\mezag\d0287541\TSCTYP.dgn	USER NAME = mezag	DESIGNED - R.L.	REVISED - 06/94	STATE OF ILLINOIS DEPARTMENT OF TRANSPORTATION TRAFFIC SYSTEMS CENTER	TYPICAL RAMP METERING INSTALLATION TYPE I & II (WITH CURB & GUTTER)
		DRAWN - G.M.	REVISED - 09/96		
	PLOT SCALE = 100.0000 ′ / in.	CHECKED - R.L.	REVISED - 02/98		
	PLOT DATE = 7/26/2012	DATE -	REVISED -		SCALE: NONE · SHEET NO. OF SHEETS · STA. TO STA.

F.A. RTE.	SECTION	COUNTY	TOTAL SHEETS	SHEET NO.
			404	363
		CONTRACT NO.		
FED. ROAD DIST. NO.	ILLINOIS	FED. AID PROJECT		

TRAFFIC SYSTEMS CENTER (TY-1TSC-400#2)

TSCTYP.dgn 7/26/2012 1:02:02 PM User=mezag