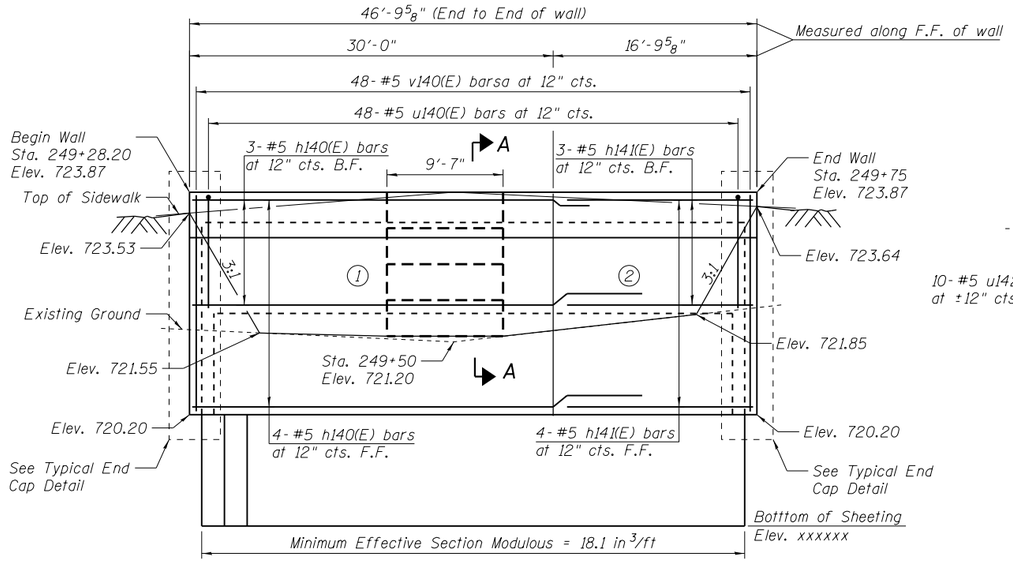

ELEVATION

(Looking west)

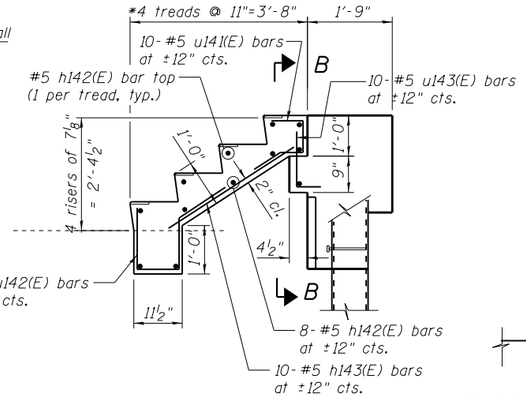

SECTION A-A

* Cost included in "Concrete Structures"

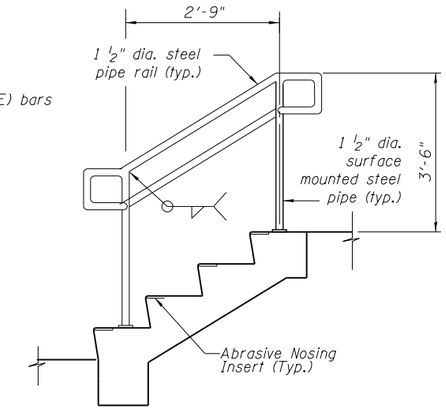

TYPICAL PIPE HANDRAIL DETAIL

Note: Contractor to provide min. 1/8" per ft. slope on stairs to prevent ponding.

BILL OF MATERIAL

Bar	No.	Size	Length	Shape
h140(E)	7	#5	33'-8"	
h141(E)	7	#5	16'-6"	
h142(E)	12	#5	9'-3"	
h143(E)	10	#5	3'-5"	
u140(E)	55	#5	4'-9"	
u141(E)	10	#5	3'-8"	
u142(E)	10	#5	4'-5"	
u143(E)	10	#5	1'-9"	
v140(E)	47	#5	3'-4"	
Structure Excavation			Cu. Yd.	31
Concrete Structures			Cu. Yd.	11.6
Form Liner Textured Surface			Sq. Ft.	116
Reinforcement Bars, Epoxy Coated			Pound	1,060
Pipe Handrail			Foot	12
Permanent Sheet Piling			Sq. Ft.	626
Ornamental Railing			Foot	38

BAR LAPS

Basic Lap
#5 bars - 2'-7"

Top Bar Lap
#5 bars - 2'-11"

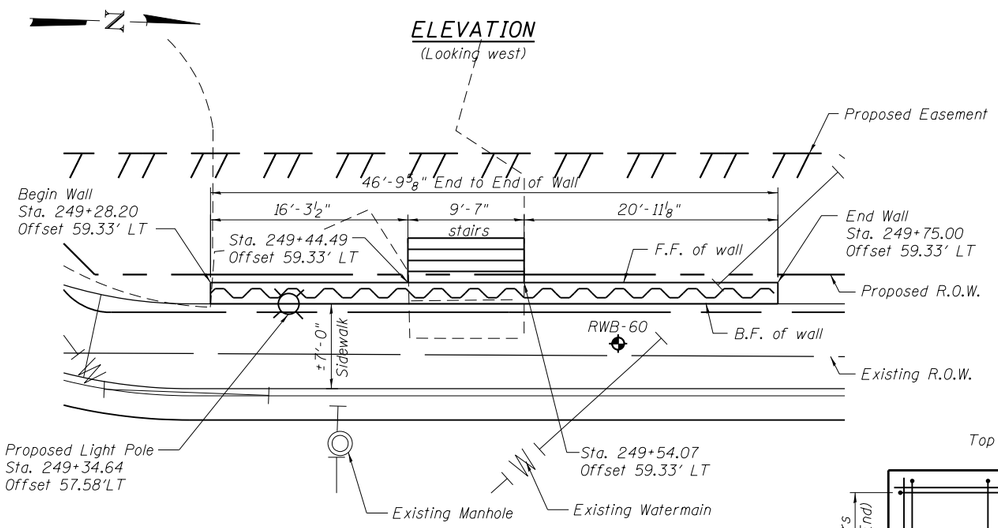

PLAN

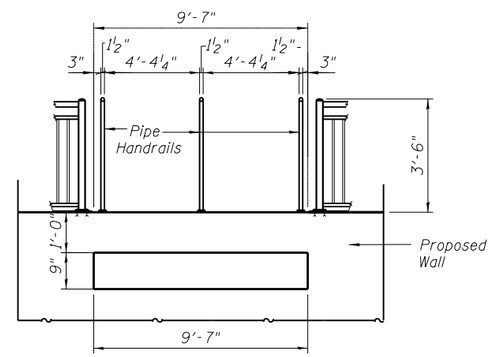

SECTION B-B

(Stairs not shown)

LEGEND

⊘ = Panel No.
✥ = Soil Boring
F.F. = Front Face
B.F. = Back Face
E.F. = Each Face

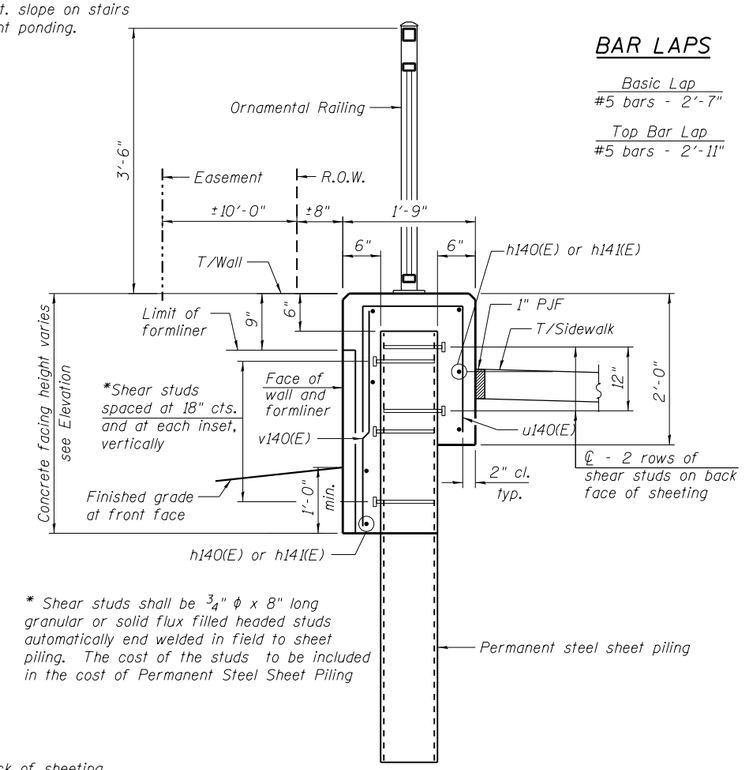

* Shear studs shall be 3/4" ϕ x 8" long granular or solid flux filled headed studs automatically end welded in field to sheet piling. The cost of the studs to be included in the cost of Permanent Steel Sheet Piling

TYPICAL SECTION THROUGH WALL

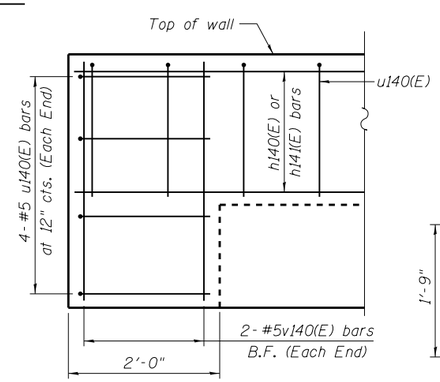

TYPICAL END CAP DETAIL

(v(E) bars at F.F. not shown for clarity)

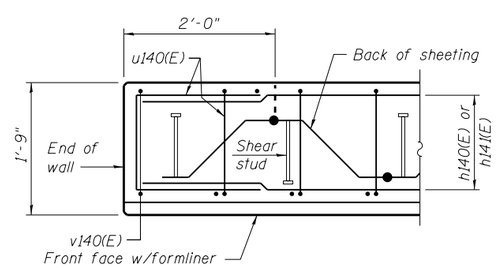

PLAN AT END OF WALL

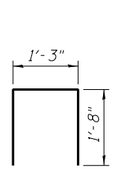

BAR u140(E)

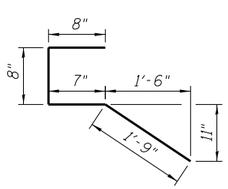

BAR u141(E)

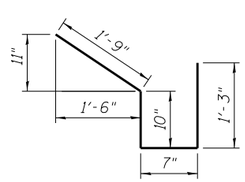

BAR u142(E)

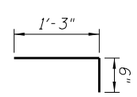

BAR u143(E)

NOTES:

Wall stations, offsets and dimensions are measured at front face of wall.

All exposed corners shall have a 1" chamfer.

For General Notes, Wall Key Plan and US 45 Profile, see Sheet 1.

For Typical Wall Details and Ornamental Railing see Sheet 2.

The details for the concrete cap, reinforcement and required number of shear stud connectors are based on Section AZ 18 sheet piling. If the Contractor chooses to use any other section, then the Contractor shall submit revised concrete cap and reinforcement configuration for approval by the Engineer. Such changes shall not be cause for additional compensation.

URS
100 S. WACKER DR.
SUITE 500
CHICAGO IL 60606
TEL (312)939-1000
FAX (312)939-4198

FILE NAME = D160M61-SHT-Wall_14-1.dgn	USER NAME = Anthony_Plutz	DESIGNED - SAP	REVISED -
		CHECKED - MJL	REVISED -
	PLOT SCALE = 12.5000 ' / in.	DRAWN - MJL	REVISED -
	PLOT DATE = 3/14/2013	CHECKED -	REVISED -

STATE OF ILLINOIS
DEPARTMENT OF TRANSPORTATION

RETAINING WALL NO. 14 – S.N. 016-Z040
STA. 249+28.20 TO 249+75.00

SHEET NO. 13 OF 42 SHEETS

F.A.P RTE.	SECTION	COUNTY	TOTAL SHEETS	SHEET NO.
330	103R-4	COOK	877	489
		CONTRACT NO. 60M61		
		ILLINOIS FED. AID PROJECT		