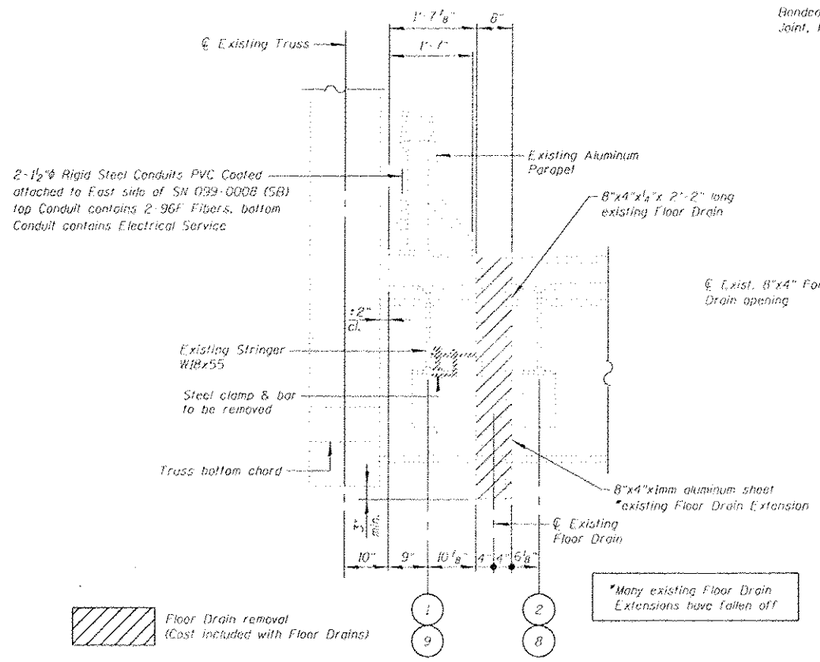

EXISTING SECTION AT FLOOR DRAIN

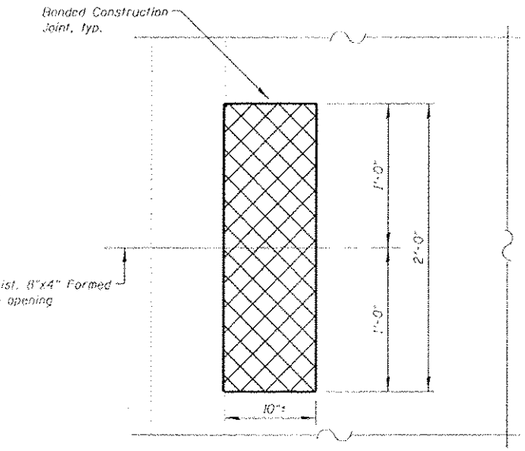

PARTIAL PLAN

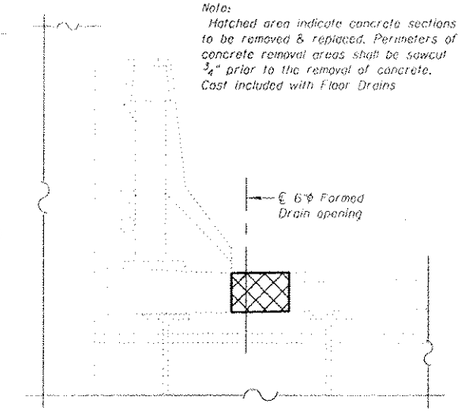

SECTION AT DRAIN

Concrete Removal

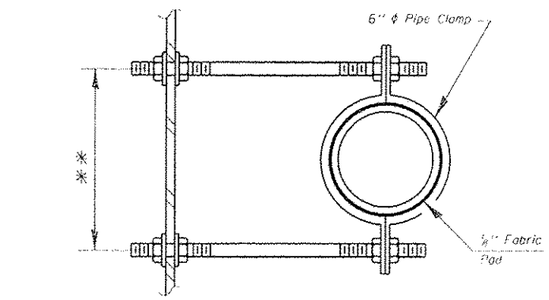

SECTION A-A

**Dimension as required by Pipe Clamp

Note:
The exterior surfaces of the floor drains shall be painted with the finish coat as specified in the 2012 Special Provision Section 506 for Cleaning and Painting New Metal Structures. The exterior surface of the drains shall be cleaned and given a washcoat pretreatment in accordance with Society of Protective Coatings Spec. SSPC-SP1 & SSPC Paint 27 prior to painting.

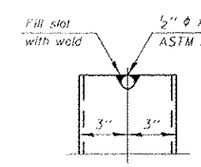

ALUMINUM TUBE

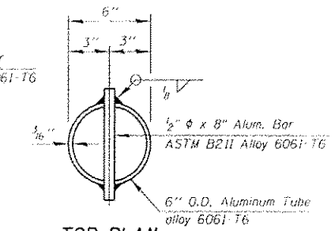

TOP PLAN
(Showing Aluminum Tube)

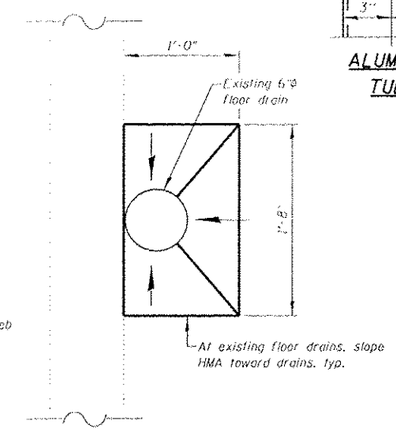

H.M.A. SURFACE DETAIL AT DRAIN

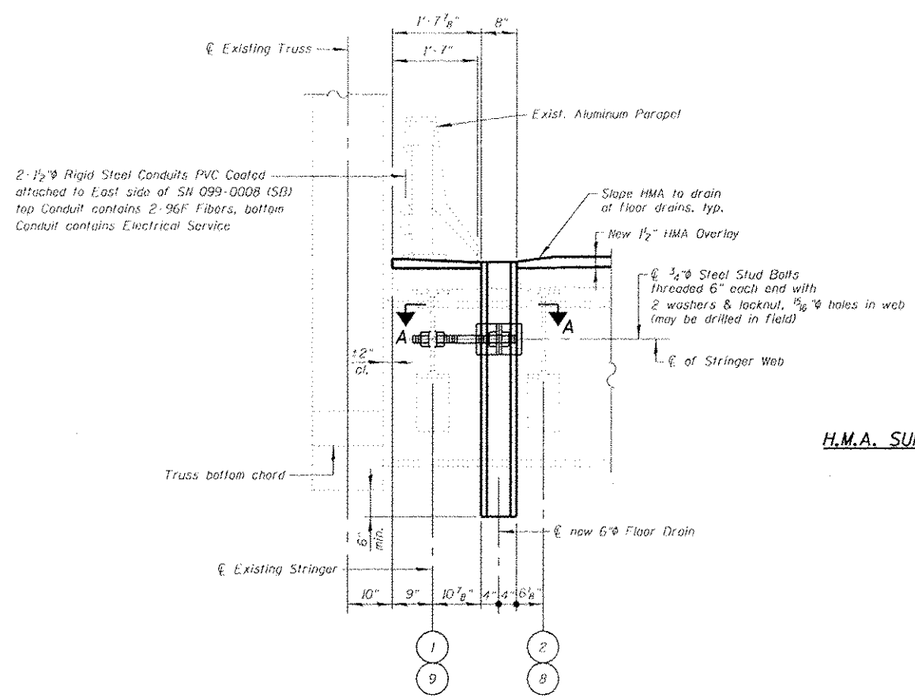

PROPOSED SECTION AT FLOOR DRAIN

BILL OF MATERIAL

DESCRIPTION	UNIT	TOTAL
Floor Drains	Each	112
Plug Existing Deck Drains	Each	80

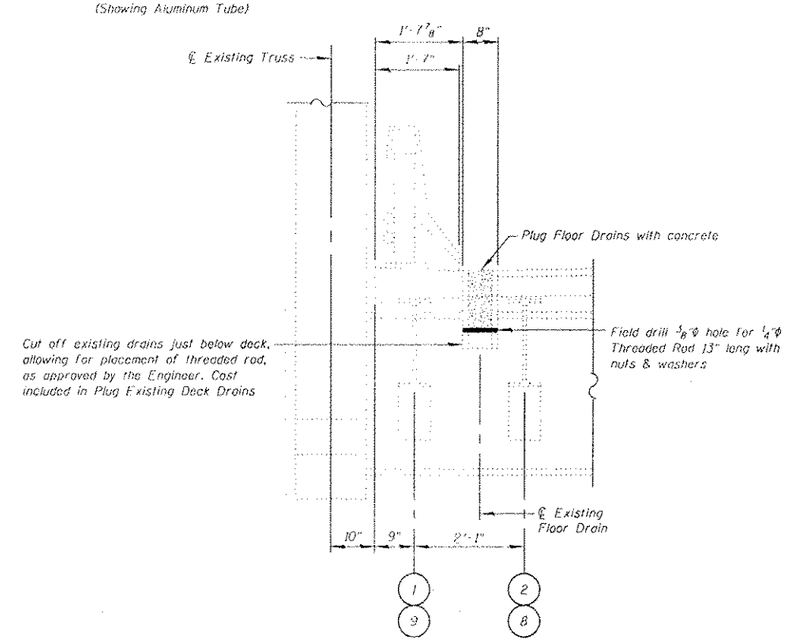

SECTION AT FLOOR DRAIN ELIMINATION

FILE NAME = I:\103203.1-55 over Des Plaines\Structural\CADD Sheets\D160R62-18-floor_drain-details.dgn

CHRISTIAN-ROGE & ASSOCIATES, INC.	USER NAME = brzewozniks	DESIGNED - J.C.N./B.N.S./J.W.	REVISED -	STATE OF ILLINOIS DEPARTMENT OF TRANSPORTATION
		CHECKED - B.N.S./J.W.	REVISED -	
	PLOT SCALE = 100.0000 ' / IN.	DRAWN - F.M.	REVISED -	
	PLOT DATE = 3/21/2013	DATE - MARCH 20, 2013	REVISED -	

FLOOR DRAIN REPLACEMENT DETAILS
STRUCTURE NO'S. 099-0008 & 099-0009

SHEET NO. 518 OF 560 SHEETS

F.A.I. RTE.	SECTION	COUNTY	TOTAL SHEETS	SHEET NO.
55	87B, D-BR-1	WILL	106	57
		CONTRACT NO. 60R62		
		ILLINOIS FED. AID PROJECT		