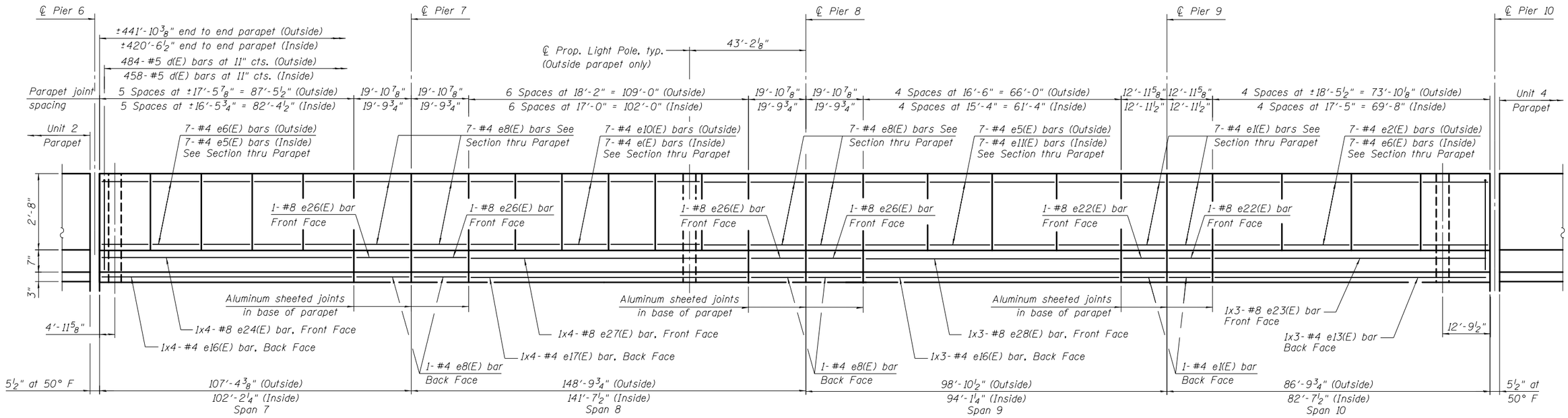

INSIDE ELEVATION OF INSIDE & OUTSIDE PARAPETS

(Unit 3)

MINIMUM BAR LAP

(Parapet)
#4 bar = 2'-0"
#8 bar = 5'-2"

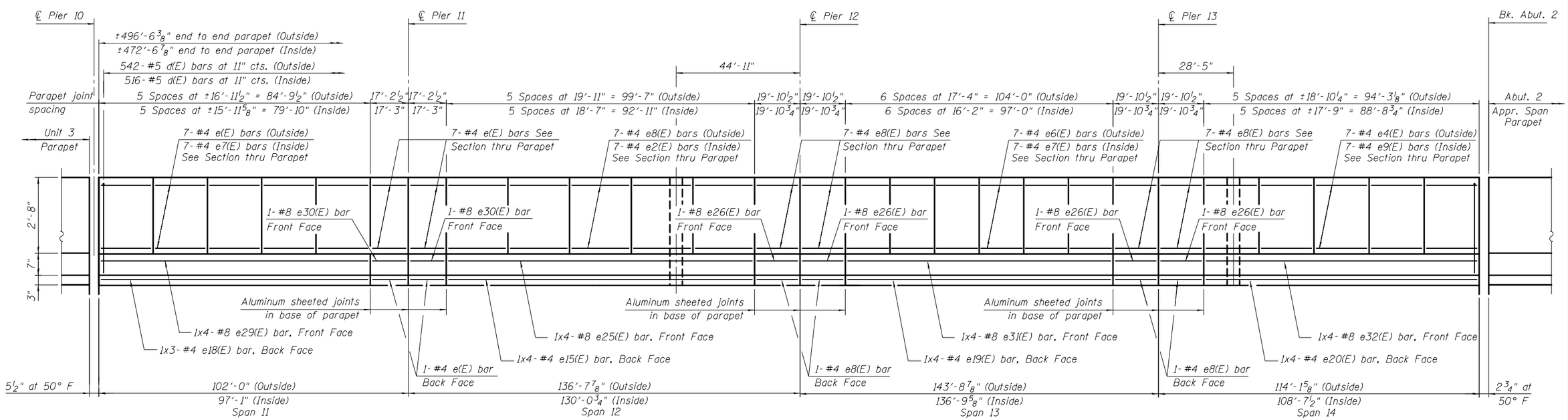

INSIDE ELEVATION OF INSIDE & OUTSIDE PARAPETS

(Unit 4)

BOWMAN, BARRETT & ASSOCIATES INC.
CONSULTING ENGINEERS
Chicago, Illinois
312.228.0100
www.bbandainc.com

USER NAME =	DESIGNED - IYL	REVISED -	
	CHECKED - BAK	REVISED -	
PLOT SCALE =	DRAWN - MTR	REVISED -	
PLOT DATE = 11/08/2012	CHECKED - IYL	REVISED -	

STATE OF ILLINOIS
DEPARTMENT OF TRANSPORTATION

SUPERSTRUCTURE DETAILS III
STRUCTURE NO. 016-2437

SHEET NO. S-23 OF S-83 SHEETS

F.A.I. RTE.	SECTION	COUNTY	TOTAL SHEETS	SHEET NO.
94	2012-060-BR	COOK	285	186

CONTRACT NO. 60V61

ILLINOIS FED. AID PROJECT

S:\0172\05-CADD\Structural\SN 0162437\CADD Sheets\0162437-60J12-023-SD03.dgn 12/7/2012 2:26:11 PM