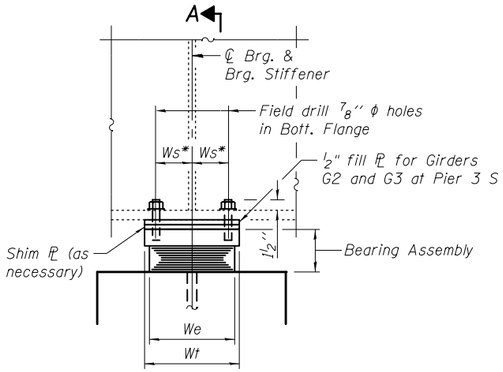

ELEVATION

*Dimensions measured parallel to or at right angles to ℄ girders. See Bearing Orientation Plans.

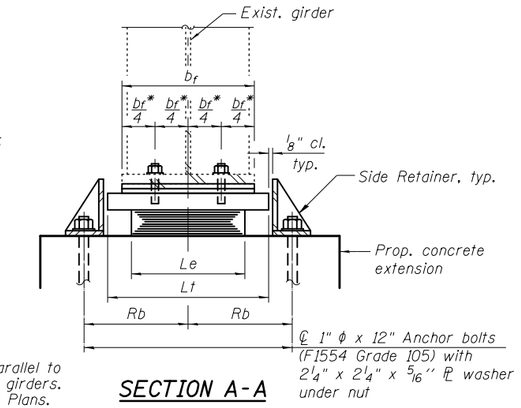

SECTION A-A

TYPE I ELASTOMERIC EXP. BRG.

TYPE I ELASTOMERIC BEARING DESIGN DATA

Location	Bearing Orientation						Th	Elastomers and Steel Plates							Top Plate				br	Rb	v
	α	X1**	X2**	Y1**	Y2**	Y3		We	Le	Tp	Np	Ts	Ns	Te	Tt	Wt	Lt	Ws			
Pier 1	0°	1'-1"	1'-1"	8"	8"	1 5/8"	8 1/16"	15"	24"	3/4"	6	3/16"	5	5 7/16"	2 5/8"	1'-4"	2'-2"	5 3/4"	1'-0"	1'-3 1/4"	8 1/16"
Pier 4	+5°00'46"	1'-0 1/4"	1'-1 5/8"	9 1/8"	6 13/16"	1 5/8"															
Pier 3 S	0°	8"	8"	5 1/2"	5 1/2"	1 5/8"	6"	10"	14"	7/16"	8	1/8"	7	4 3/8"	1 5/8"	11"	1'-4"	3 1/4"	1'-0"	10 1/4"	6"
Pier 6 S	-4°03'03"	8 3/8"	7 9/16"	4 15/16"	6 1/16"	1 5/8"															
Pier 9	-4°53'04"	1'-0 5/8"	11 5/16"	6 7/16"	8 1/2"	1 5/8"	5 13/16"	14"	22"	11/16"	4	3/16"	3	3 5/16"	2 1/2"	1'-3"	2'-0"	5 1/2"	1'-4"	1'-2 1/4"	5 13/16"

**Dimensions measured to corner of top plate.

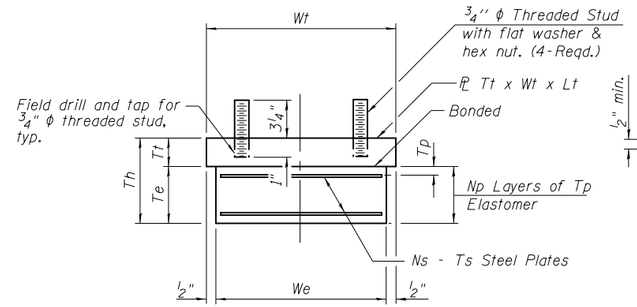

BEARING ASSEMBLY

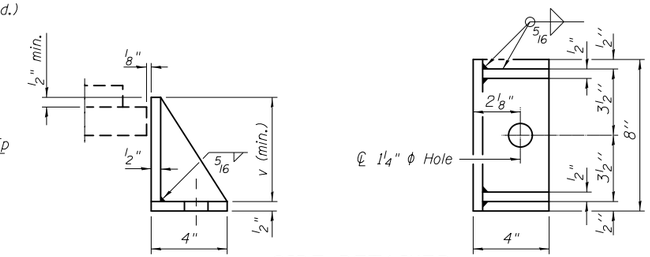

SIDE RETAINER

Equivalent rolled angle with stiffeners will be allowed in lieu of welded plates.

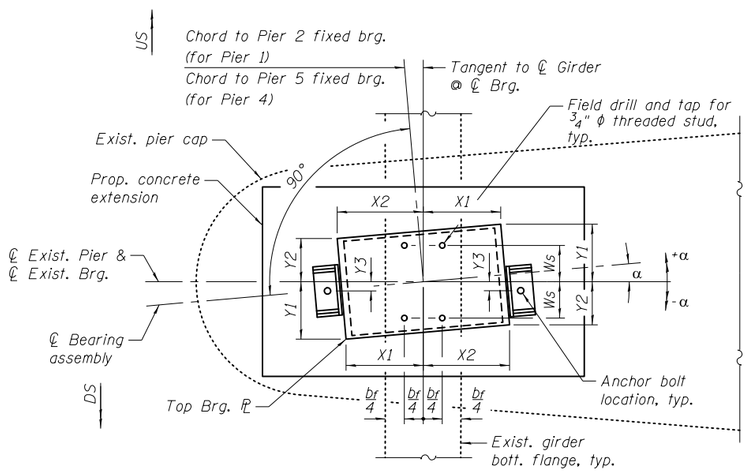

BEARING ORIENTATION PLAN

Pier 4 shown, Pier 1 similar

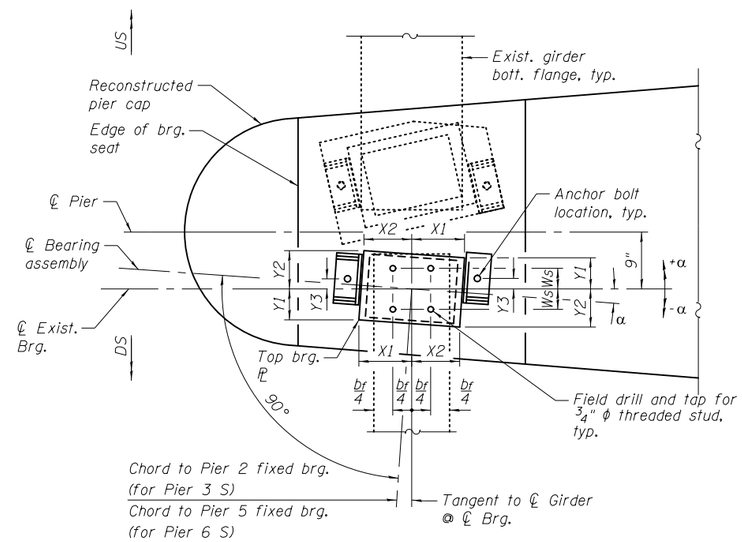

BEARING ORIENTATION PLAN

Pier 6 S shown, Pier 3 S similar

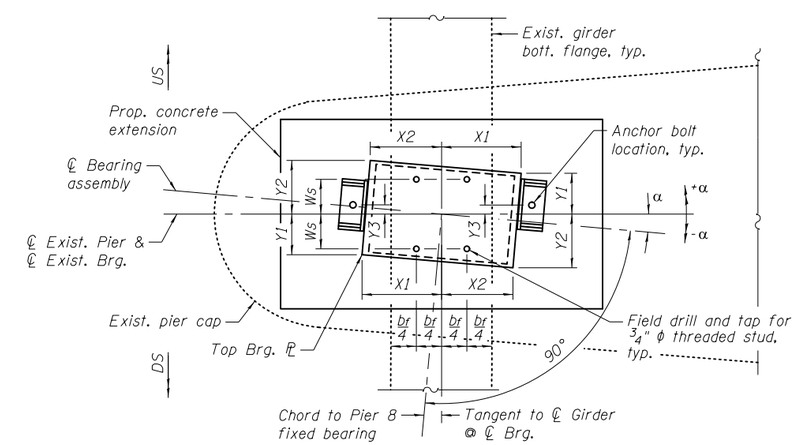

BEARING ORIENTATION PLAN

Pier 9

Notes:

Anchor bolts shall be ASTM F1554 all-thread (or an Engineer-approved alternate material) of the grade(s) and diameter(s) specified. The corresponding specified grade of AASHTO M314 anchor bolts may be used in lieu of ASTM F1554.

Anchor bolts for side retainers may be cast in place or installed in drilled holes.

Drilled and set anchor bolts shall be installed according to Article 521.06 of the Standard Specifications.

Side retainers, and other steel members required for the elastomeric bearing assembly shall be included in the cost of Elastomeric Bearing Assembly, Type I.

Cost of field drilling & tapping shall be included in the cost of Elastomeric Bearing Assembly, Type I.

See Sheet S-62 for Bearing Removal Details and Jacking Procedure.

Two 1/8 in. adjusting shims shall be provided for each bearing in addition to all other plates or shims and placed as shown on bearing details.

Existing cross frame bolts shall not be removed without prior approval from the Engineer.

BILL OF MATERIAL

Item	Unit	Total
Elastomeric Bearing Assembly Type I	Each	20
Anchor Bolts, 1"	Each	40

TYPE II ELASTOMERIC BEARING DESIGN DATA

Location	Girder slope	Bearing Orientation					Elastomers and Steel Plates							Top Plate			Bottom Plate			br	Rb	Wa	v
		α	X1**	X2**	Y1**	Y2**	We	Le	Tp	Np	Ts	Ns	Te	Tt	Wt	Lt	Tb	Wb	Lb				
Abut. 1	3.6%	0°	1'-0 1/8"	1'-0 1/8"	6 3/4"	6 3/4"	10"	14"	7/16"	6	1/8"	5	4 1/8"	1 15/16"	1'-0"	1'-4"	1"	1'-1 1/2"	2'-0 1/4"	12"	10 1/4"	4"	6 1/16"
Pier 3 N	3.3%	+5°55'37"	11 3/8"	1'-0 3/4"	7 15/16"	5 7/16"																6 1/8"	
Pier 6 N	3.5%	+12°42'16"	11"	1'-2 5/8"	10 15/16"	5 3/16"	10"	14"	7/16"	8	1/8"	7	5 1/4"	1 15/16"	1'-1"	1'-6"	1 3/8"	1'-4 1/2"	2'-2 1/4"	16"	11 1/4"	9 1/8"	7 3/16"
Abut. 2	-3.7%	-12°42'01"	1'-3 5/8"	11 15/16"	5 3/16"	11 3/8"	11"	16"	1/2"	7	1/8"	6	5 1/8"	2"	1'-2"	1'-8"	1 1/2"	1'-5"	2'-4 1/4"	18"	1'-0 1/4"	9 1/2"	7 1/8"

**Dimensions measured to corner of bottom plate, or theorectical corner where bottom plate is clipped.

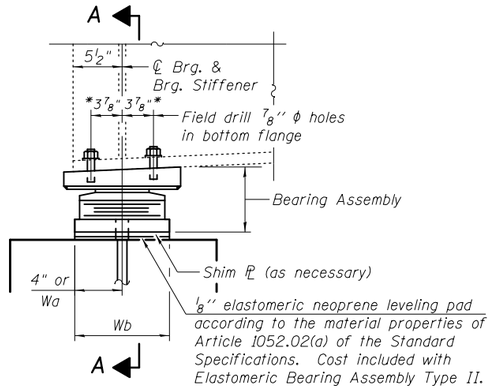

ELEVATION

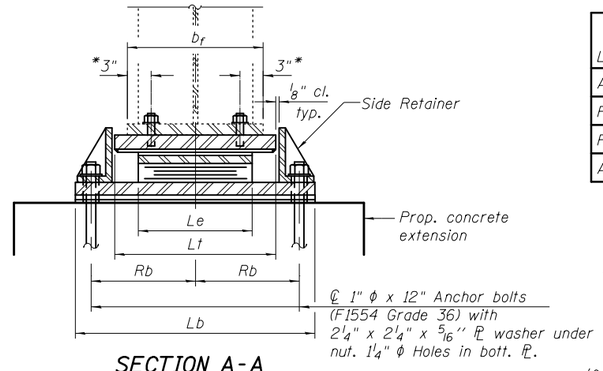

SECTION A-A

*Dimensions measured parallel to or at right angles to ℄ girders. See Bearing Orientation Plans.

TYPE II ELASTOMERIC EXP. BRG.

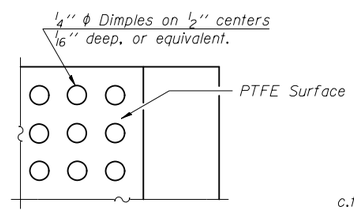

PLAN-PTFE SURFACE

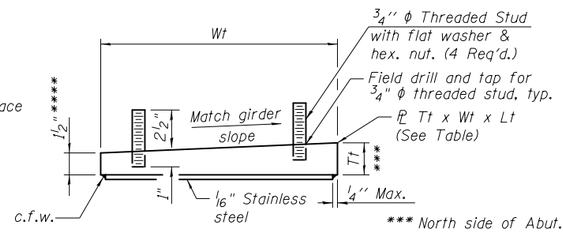

TOP BEARING ASSEMBLY

*** North side of Abut. 1, Pier 3 N, & Pier 6 N
East side of Abut. 2

**** South side of Abut. 1, Pier 3 N, & Pier 6 N
West side of Abut. 2

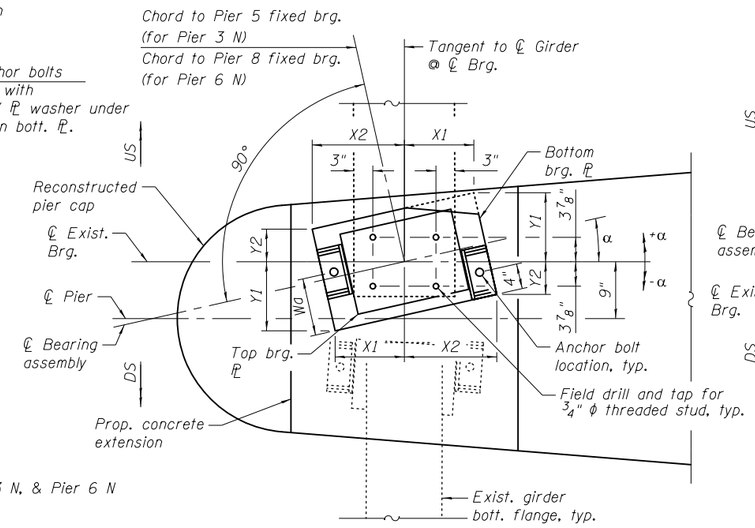

BEARING ORIENTATION PLAN

Pier 6 N shown, Pier 3 N similar

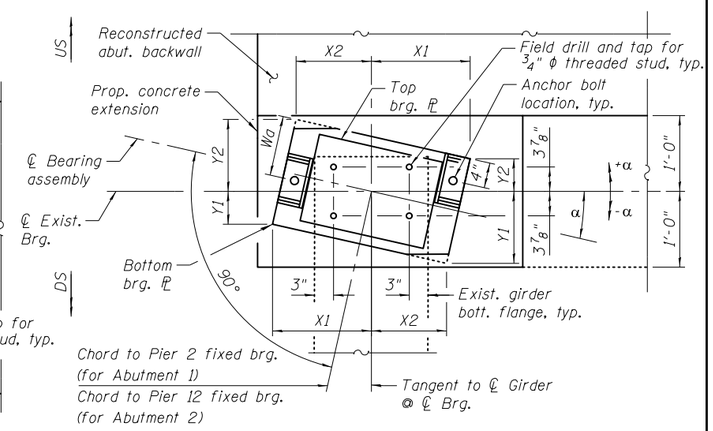

BEARING ORIENTATION PLAN

Abutment 2 shown, Abutment 1 similar

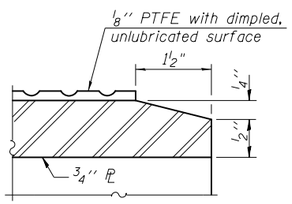

SECTION THRU PTFE

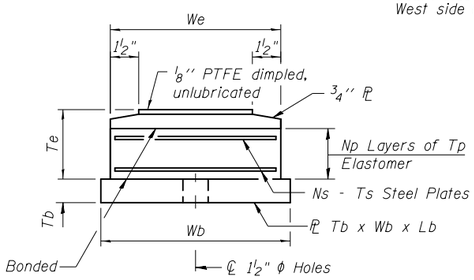

BOTTOM BEARING ASSEMBLY

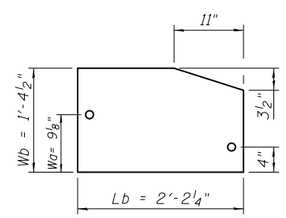

BOTTOM PLATE CLIP DETAIL

(Girders G1 & G4 at Pier 6N, 2 required)

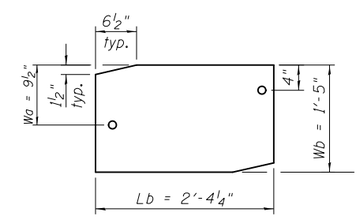

BOTTOM PLATE CLIP DETAIL

(Girders G1 thru G4 at Abutment 2, 4 required)

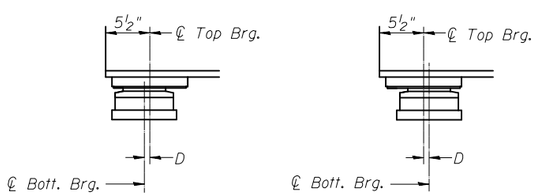

BELOW 50°F.
(Move bott. brg. away from fixed brg.)

ABOVE 50°F.
(Move bott. brg. toward fixed brg.)

SETTING ANCHOR BOLTS AT EXP. BRG.

D=1/8" per each 100' of expansion for every 15° temp. change from the normal temp. of 50°F.

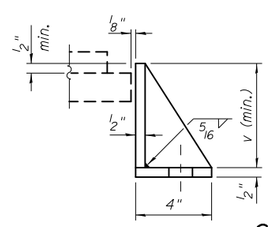

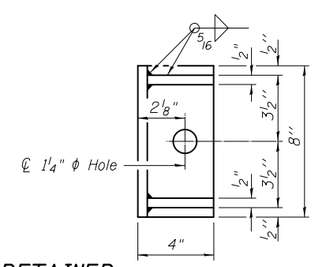

SIDE RETAINER

Equivalent rolled angle with stiffeners will be allowed in lieu of welded plates.

BILL OF MATERIAL

Item	Unit	Total
Elastomeric Bearing Assembly Type II	Each	16
Anchor Bolts, 1"	Each	32

Notes:

Anchor bolts shall be ASTM F1554 all-thread (or an Engineer-approved alternate material) of the grade(s) and diameter(s) specified. The corresponding specified grade of AASHTO M314 anchor bolts may be used in lieu of ASTM F1554.

Anchor bolts for Type II bearings shall be placed in holes drilled in the concrete through holes in the bottom bearing plate after bearings are in place. Side retainers shall be placed after bolts are installed.

Drilled and set anchor bolts shall be installed according to Article 521.06 of the Standard Specifications.

Side retainers and other steel members required for the elastomeric bearing assembly shall be included in the cost of Elastomeric Bearing Assembly, Type II.

The 1/8" PTFE sheet shall be bonded directly to the top steel plate with a two-component, medium viscosity epoxy resin, conforming to the requirements of the Federal Specification MMM-A-134, Type I. The bond agent shall be applied on the full area of the contact surfaces.

Bonding of 1/8" PTFE sheet during vulcanizing process will be permitted provided the process and method of adjusting assembly height is approved by the Engineer.

Cost of field drilling & tapping shall be included in the cost of Elastomeric Bearing Assembly, Type II.

See Sheet S-62 for Bearing Removal Details and Jacking Procedure.

Two 1/8 in. adjusting shims shall be provided for each bearing in addition to all other plates or shims and placed as shown on bearing details.

The Contractor shall field verify the slope of the existing girders prior to construction or ordering of materials.

Existing cross frame bolts shall not be disconnected without prior approval from the Engineer.

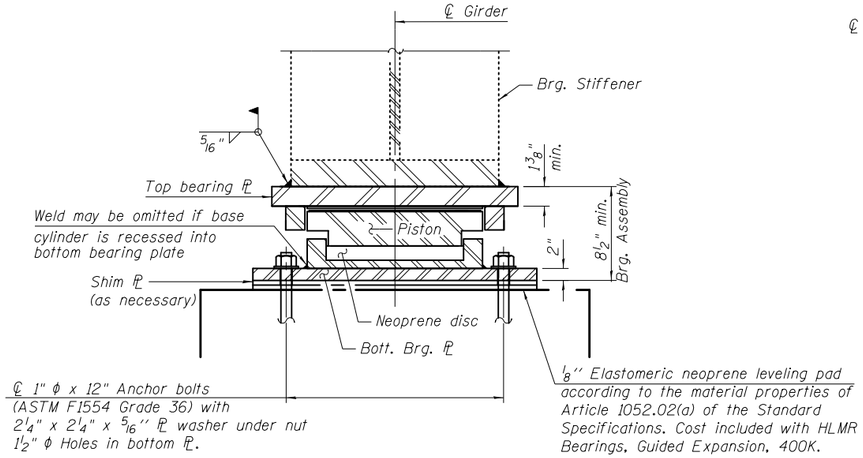

GUIDED EXPANSION HLMR BEARING

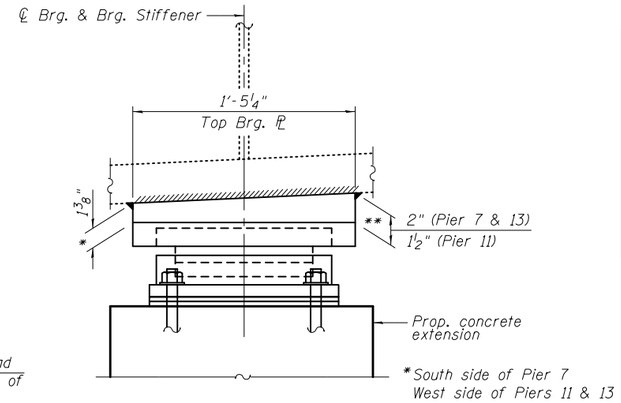

SIDE VIEW

HLMR BEARING DESIGN DATA

Location		Girder slope	Anchor Bolt Layout									Vertical Design Load, k	Lateral Design Load, k
			α	X1	Y1	X2	Y2	X3	Y3	X4	Y4		
Pier 7	G1	3.6%	+7°21'02"	1'-1 7/16"	9 5/16"	1'-3 5/16"	5 9/16"	1'-1 3/4"	6 9/16"	1'-3 5/16"	5 9/16"	400	80
	G2 thru G4			11 13/16"	10 1/16"	1'-2"	6 3/4"	11 13/16"	10 1/16"	1'-2"	6 3/4"		
Pier 11	G1	-0.9%	+6°44'59"	1'-1 1/2"	9 1/8"	1'-3 1/4"	5 3/4"	1'-1 7/8"	6 7/16"	1'-3 1/4"	5 3/4"		
	G2 thru G4			11 15/16"	10"	1'-1 15/16"	6 15/16"	11 15/16"	10"	1'-1 15/16"	6 15/16"		
Pier 13	G1	-3.7%	-7°06'01"	1'-3 5/16"	5 5/8"	1'-1 7/16"	9 1/4"	1'-3 5/16"	5 5/8"	1'-1 13/16"	6 1/2"		
	G2 thru G4			1'-1 15/16"	6 13/16"	11 7/8"	10 1/16"	1'-1 15/16"	6 13/16"	11 7/8"	10 1/16"		

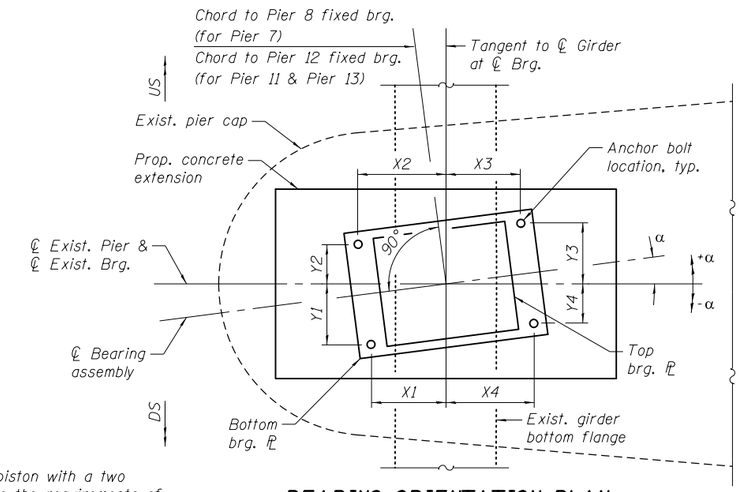

BEARING ORIENTATION PLAN

(Pier 7 & 11 orientation shown, Pier 13 orientation mirrored)

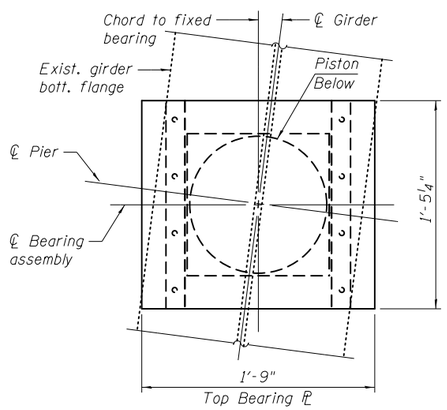

TOP BEARING ℙ AND PISTON PLAN

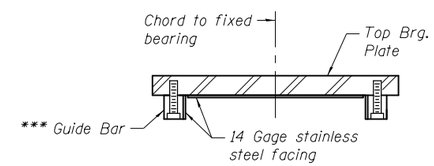

***As alternates to the bolted connection shown, the guide bars may be connected to the top bearing plate by groove welds or the guide bars and top bearing plate may be fabricated as a single piece.

TOP BEARING PLATE ASSEMBLY

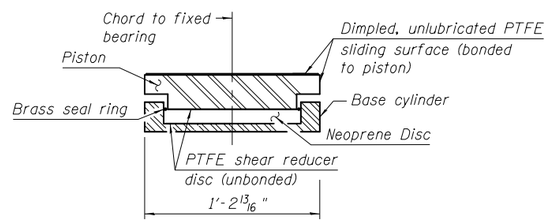

PISTON ASSEMBLY

Notes:

1. The 1/8" PTFE sheets shall be bonded directly to the piston with a two component medium viscosity epoxy resin, conforming to the requirements of the Federal Specification MM-A-134, Type 1. The bond agent shall be applied to the full area of the contact surfaces.
2. The Vertical Design Load in table is the actual controlling vertical service load.
3. HLMR Bearings dimensions and details are based on a specific manufacturer's design tables. Actual dimensions and details may differ. Contractor to verify bearing heights and adjust concrete extension heights as necessary based on the actual bearings provided. Cost included with HLMR Bearings, Guided Expansion, 400K.

Notes (cont.):

4. Cost of field welding shall be included in the cost of HLMR Bearings, Guided Expansion, 400 K.
5. See Sheet S-62 for Bearing Removal Details and Jacking Procedure.
6. Two 1/8 in. adjusting shims shall be provided for each bearing in addition to all other plates or shims and placed as shown on bearing details.
7. The Contractor shall field verify the slope of the existing girders prior to construction or ordering of materials.
8. The expected movement of each bearing due to temparature change from a normal tempurature of 50°F is 1.0" in each direction for a total movement range of 2.0".
9. Anchor bolts shall be ASTM F1554 all-thread (or an Engineer-approved alternate material) of the grade(s) and diameter(s) specified. The corresponding specified grade of AASHTO M314 anchor bolts may be used in lieu of ASTM F1554.
10. Anchor bolts for HLMR bearings shall be placed in holes drilled in the concrete through holes in the bottom bearing plate after bearings are in place.
11. Drilled and set anchor bolts shall be installed according to Article 521.06 of the Standard Specifications.
12. Existing cross-frame bolts and lateral bracing bolts shall not be disconnected without prior approval from the Engineer.

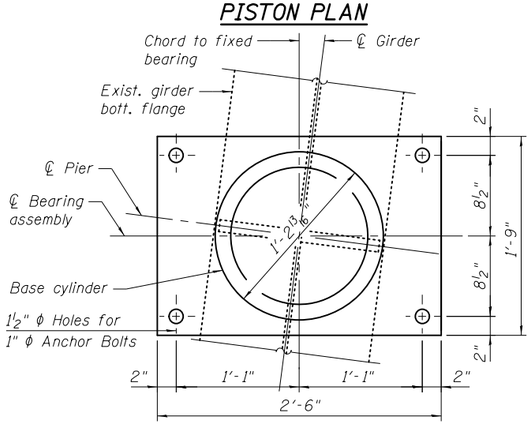

BOTTOM BEARING ℙ AND BASE CYLINDER PLAN

Girders G2 thru G4 at Piers 7, 11, and 13 (9 required)

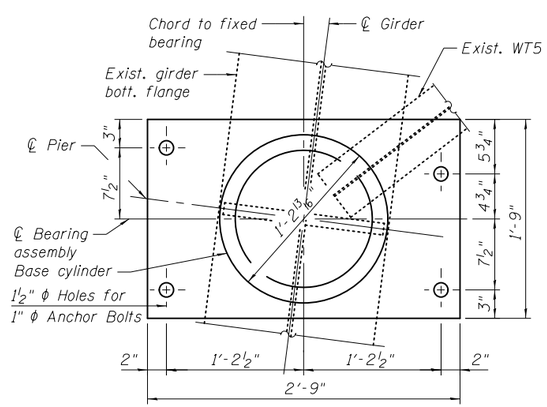

BOTTOM BEARING ℙ AND BASE CYLINDER PLAN

Girder G1 at Pier 7 & Pier 11 (2 required)

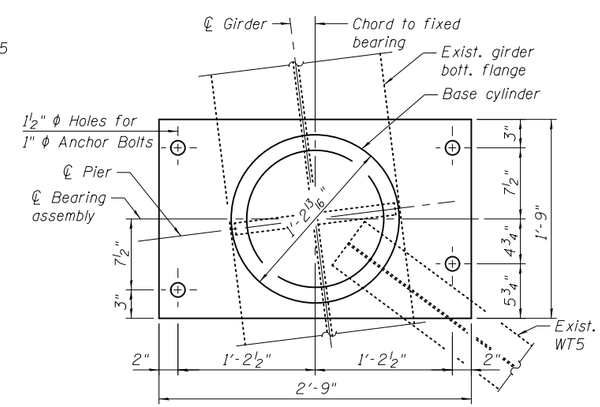

BOTTOM BEARING ℙ AND BASE CYLINDER PLAN

Girder G1 at Pier 13 (1 required)

BILL OF MATERIAL

Item	Unit	Total
HLMR Bearings, Guided Expansion, 400K	Each	12
Anchor Bolts, 1"	Each	48

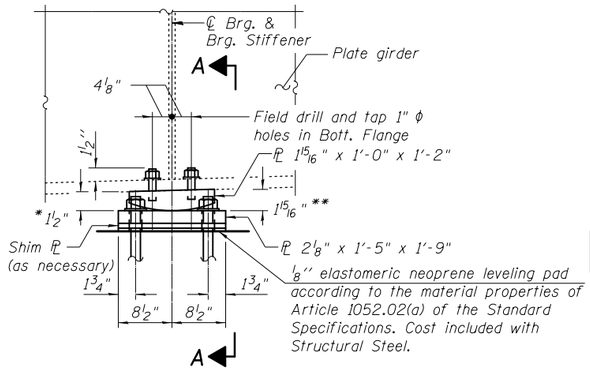

ELEVATION

* South side of Pier 2 & Pier 5
** North side of Pier 2 & Pier 5

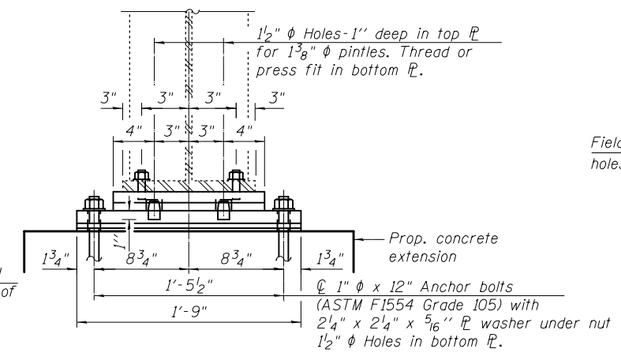

SECTION A-A

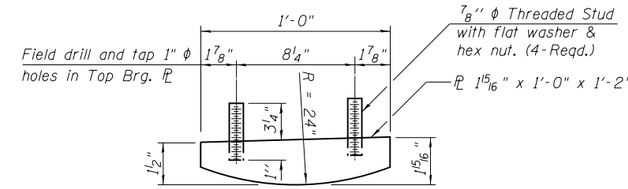

TOP BEARING PLATE DETAIL

Pier 2 & Pier 5

FIXED BEARING AT PIER 2 & PIER 5

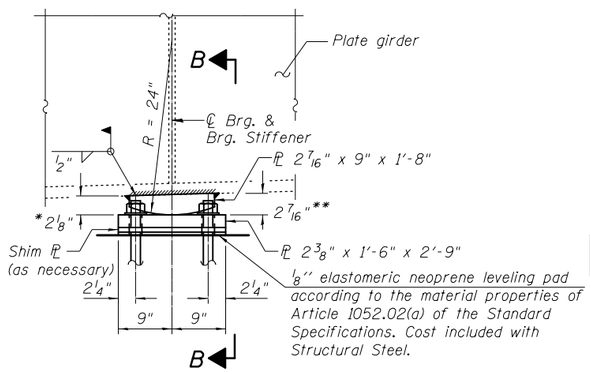

ELEVATION

* South side of Pier 8 & West side of Pier 12
** North side of Pier 8 & East side of Pier 12

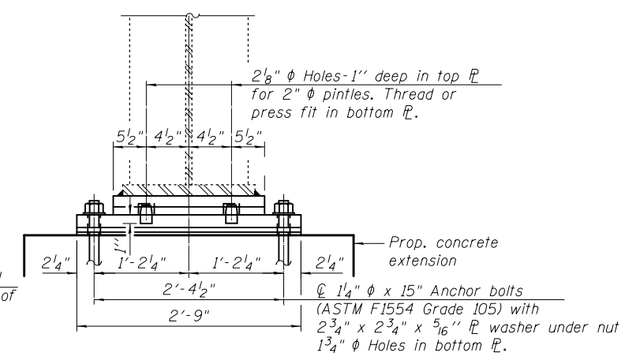

SECTION B-B

FIXED BEARING AT PIER 8 & PIER 12

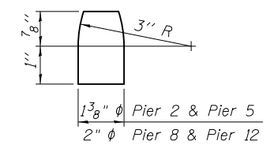

PINTLE

Notes:

Anchor bolts shall be ASTM F1554 all-thread (or an Engineer-approved alternate material) of the grade(s) and diameter(s) specified. The corresponding specified grade of AASHTO M314 anchor bolts may be used in lieu of ASTM F1554.

Anchor bolts at fixed bearings may be either cast in place or installed in drilled holes.

Drilled and set anchor bolts shall be installed according to Article 521.06 of the Standard Specifications.

Cost of field welding and cost of field drilling and tapping holes shall be included in the cost of Furnishing and Erecting Structural Steel.

See Sheet S-62 for Bearing Removal Details and Jacking Procedure.

Two 1/8 in. adjusting shims shall be provided for each bearing in addition to all other plates or shims and placed as shown on bearing details.

The Contractor shall field verify the slope of the existing girders prior to construction or ordering of materials.

Existing cross frame bolts and lateral bracing bolts shall not be disconnected without prior approval from the Engineer.

BILL OF MATERIAL

Item	Unit	Total
Furnishing and Erecting Structural Steel	Pound	6,540
Anchor Bolts, 1"	Each	32
Anchor Bolts, 1 1/4"	Each	32

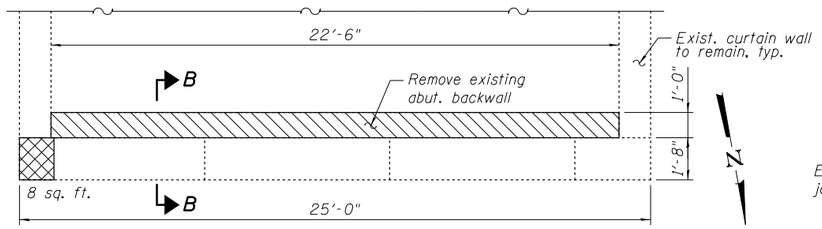

SECTION A-A

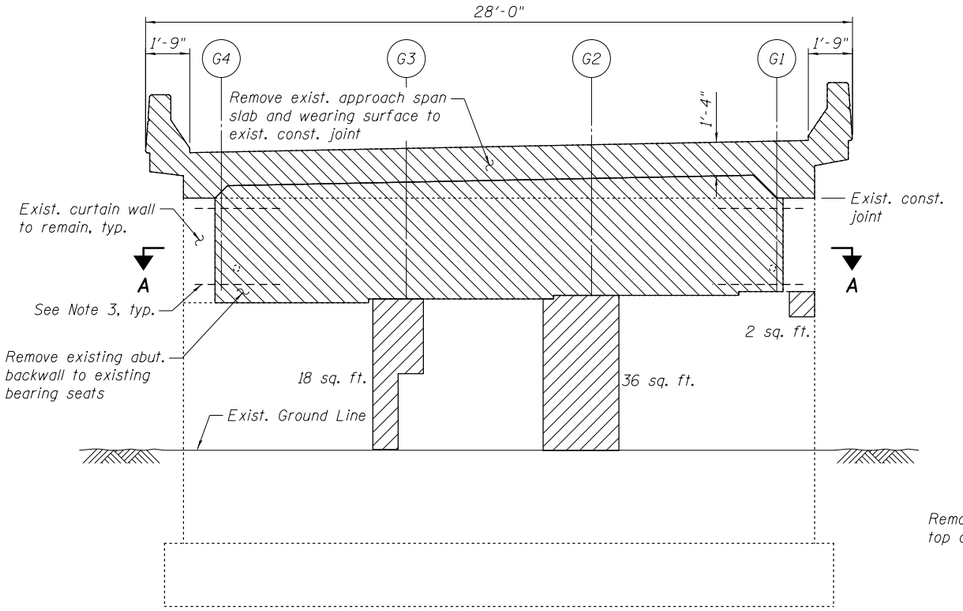

ELEVATION

(Looking South)

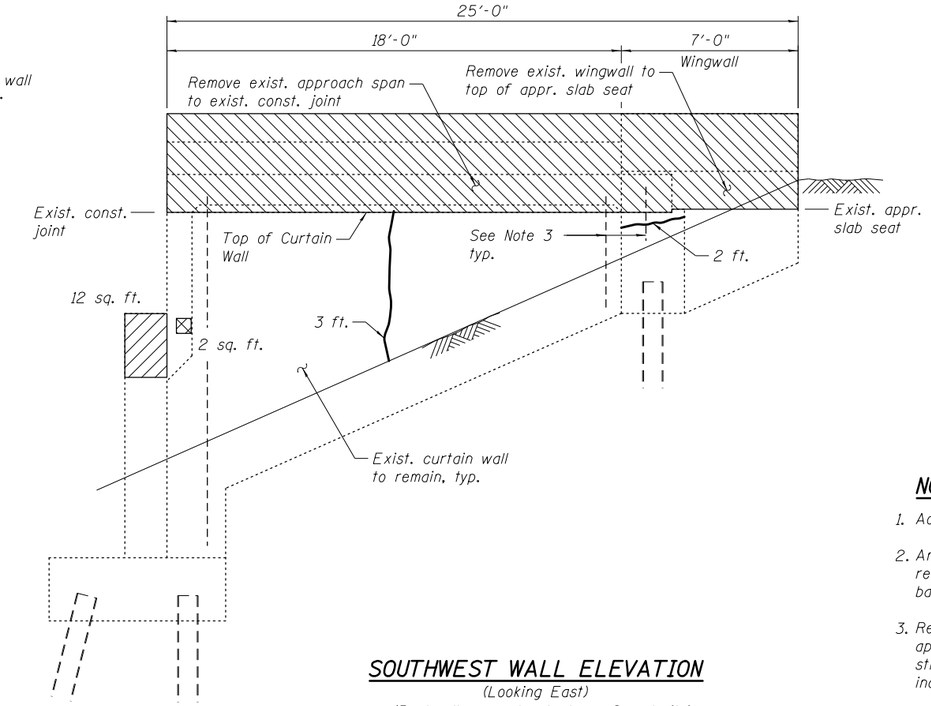

SOUTHWEST WALL ELEVATION

(Looking East)
(Backwall removal not shown for clarity)

NOTES:

1. Actual quantities of repairs shall be approved by the Engineer.
2. Any existing reinforcement to remain that is damaged during removal operations shall be repaired or replaced with an approved bar splicer or anchorage system at no additional cost.
3. Reinforcement in existing abutment backwall, curtain walls, and approach bent extending into removal area shall be cleaned, straightened, and incorporated into the new construction. Cost included with Concrete Removal.

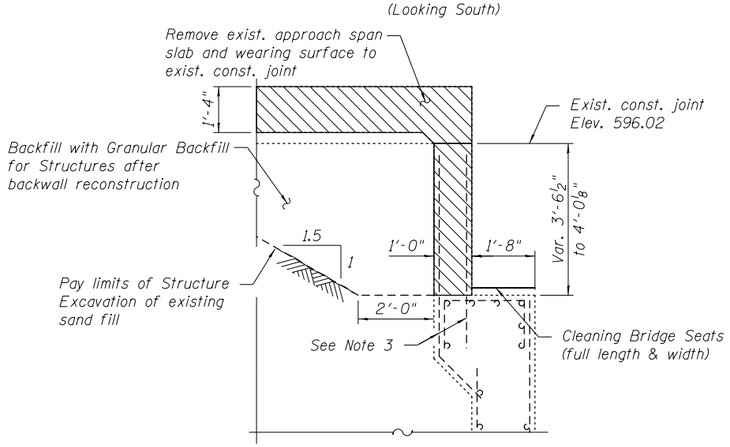

SECTION B-B

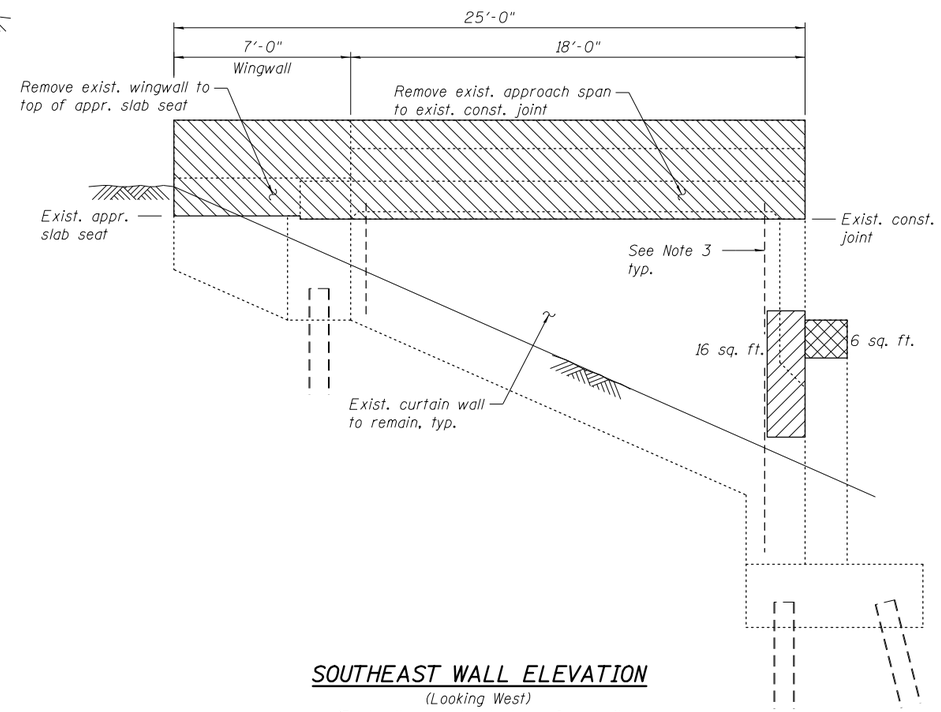

SOUTHEAST WALL ELEVATION

(Looking West)
(Backwall removal not shown for clarity)

LEGEND

- Concrete Removal
- Structural Repair of Concrete (Depth equal to or less than 5 inches)
- Structural Repair of Concrete (Depth greater than 5 inches)
- Epoxy Crack Injection

BILL OF MATERIAL

ITEM	UNIT	QUANTITY
Structure Excavation	Cu. Yd.	17
Granular Backfill for Structures	Cu. Yd.	17
Concrete Removal	Cu. Yd.	38.0
Structural Repair of Concrete (Depth equal to or less than 5 inches)	Sq. Ft.	84
Structural Repair of Concrete (Depth greater than 5 inches)	Sq. Ft.	16
Epoxy Crack Injection	Foot	5
Cleaning Bridge Seats	Sq. Ft.	42
Jack and Remove Existing Bearings	Each	4

S:\1072\05_CADD\Structural\SN 0162437\CADD Sheets\0162437-68J12-042-ABUTRemo.dgn 12/7/2012 2:26:19 PM

BOWMAN, BARRETT & ASSOCIATES INC.
CONSULTING ENGINEERS
Chicago, Illinois
312.228.0100
www.bbandainc.com

USER NAME =	DESIGNED - TL	REVISED -	
	CHECKED - BAK	REVISED -	
PLOT SCALE =	DRAWN - TL	REVISED -	
PLOT DATE = 11/08/2012	CHECKED - BAK	REVISED -	

STATE OF ILLINOIS
DEPARTMENT OF TRANSPORTATION

ABUTMENT 1 REMOVAL AND REPAIR DETAILS I
STRUCTURE NO. 016-2437

SHEET NO. S-42 OF S-83 SHEETS

F.A.I. RTE.	SECTION	COUNTY	TOTAL SHEETS	SHEET NO.
94	2012-060-BR	COOK	285	205

CONTRACT NO. 60V61

ILLINOIS FED. AID PROJECT

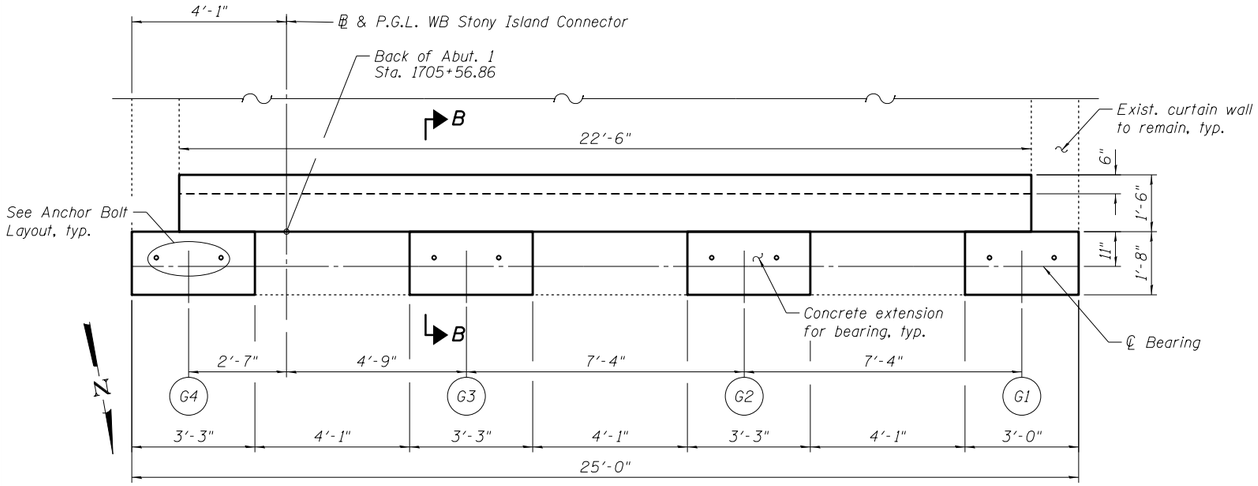

SECTION A-A

Reinf. bars not shown

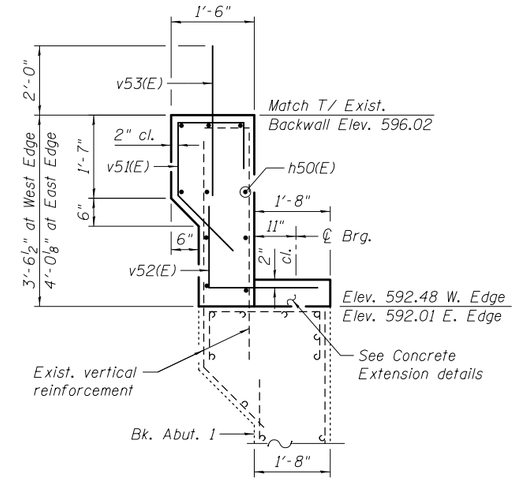

SECTION B-B

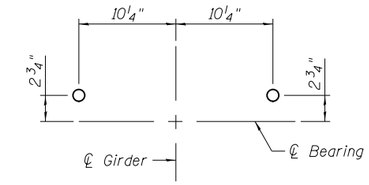

ANCHOR BOLT LAYOUT

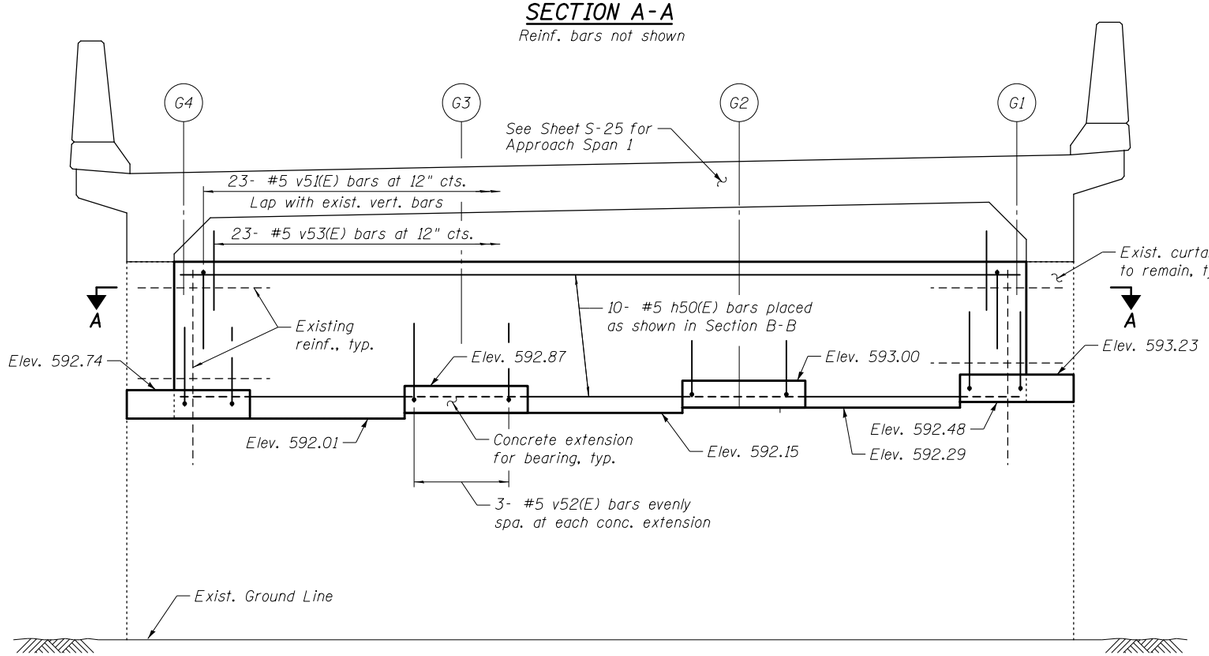

ELEVATION

(Looking South)

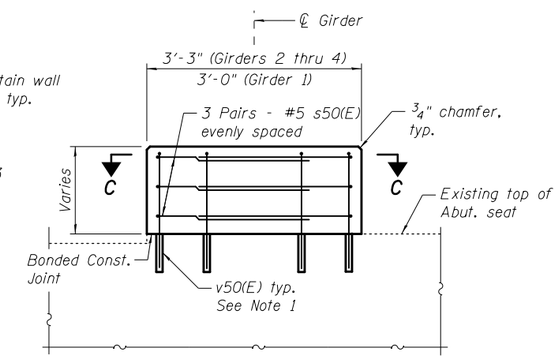

ELEVATION VIEW

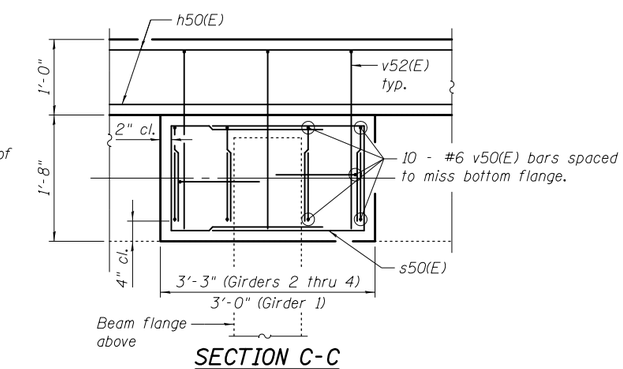

SECTION C-C

CONCRETE EXTENSIONS FOR BEARINGS

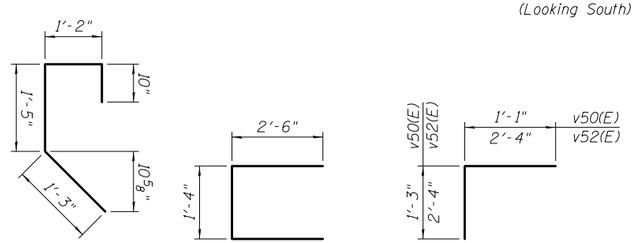

BAR v51(E)

BAR s50(E)

BARS v50(E) AND v52(E)

NOTE:

1. Epoxy grout v50(E) bars in 9" min. drilled holes according to Section 584 of the Standard Specifications.

BILL OF MATERIAL

Bar	No.	Size	Length	Shape
h50(E)	10	#5	22'-2"	
s50(E)	24	#5	6'-4"	
v50(E)	40	#6	2'-4"	
v51(E)	23	#5	4'-8"	
v52(E)	12	#5	4'-8"	
v53(E)	23	#5	3'-4"	
Concrete Structures			Cu. Yd.	4.5
Reinforcement Bars, Epoxy Coated			Pound	790
Concrete Sealer			Sq. Ft.	150

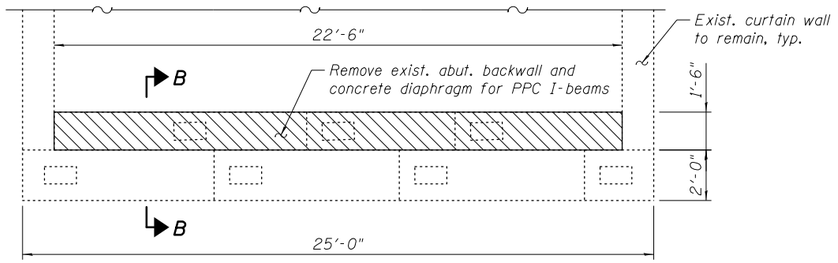

SECTION -A-A

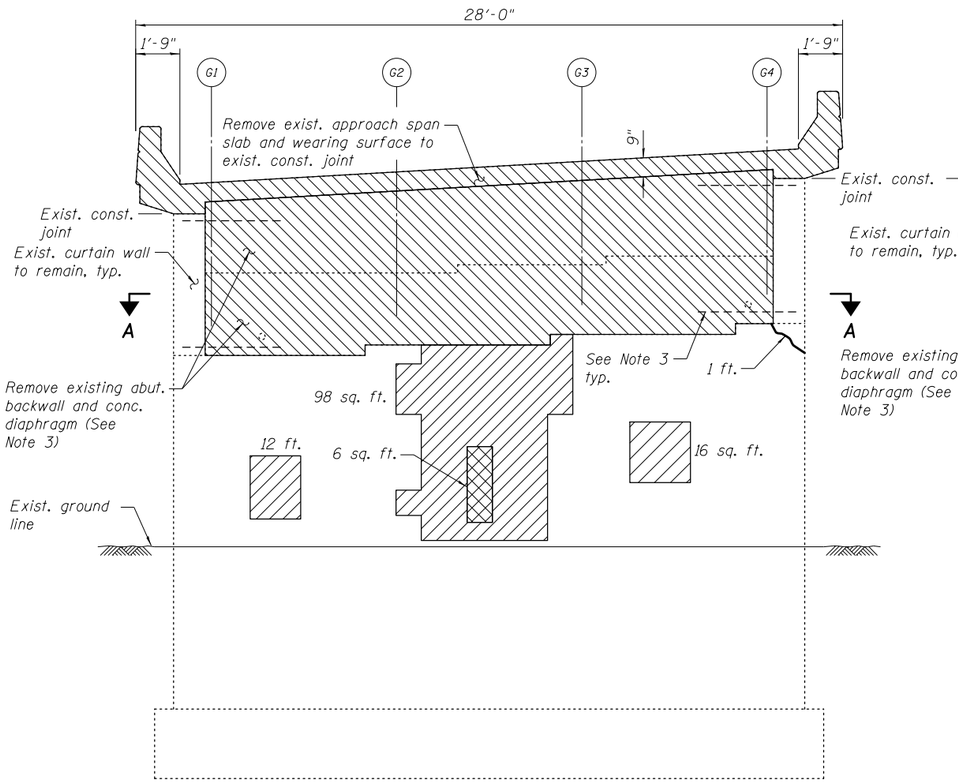

ABUTMENT ELEVATION

(Outside Face)

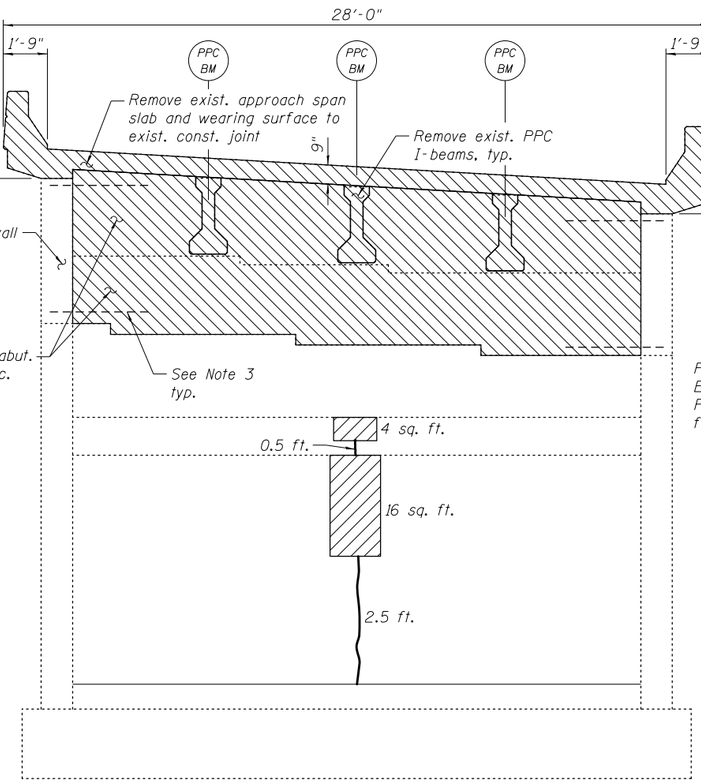

ABUTMENT ELEVATION

(Inside Face)

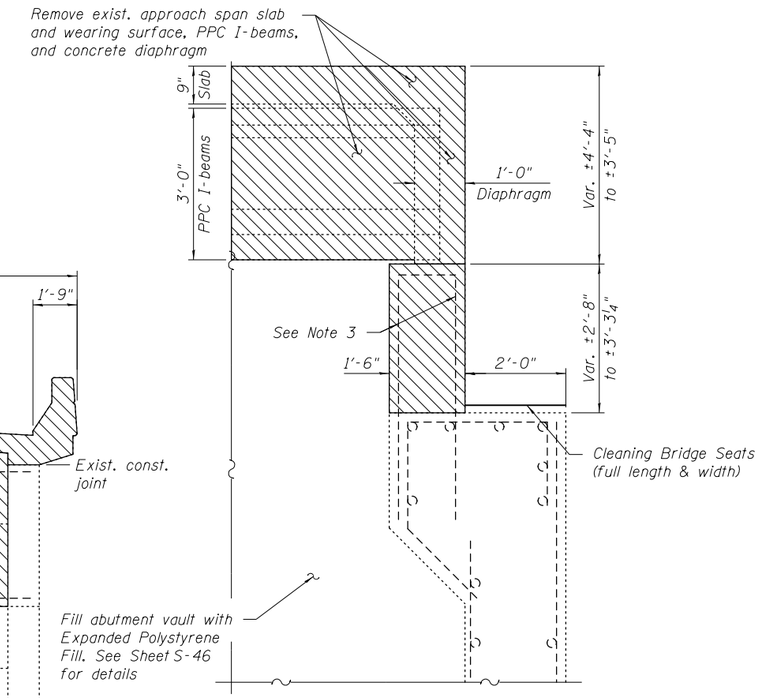

SECTION B-B

NOTES:

1. Actual quantities of repairs shall be approved by the Engineer.
2. Any existing reinforcement to remain that is damaged during removal operations shall be repaired or replaced with an approved bar splicer or anchorage system at no additional cost.
3. Reinforcement in existing abutment backwall extending into removal area shall be cleaned, straightened, and incorporated into the new construction. Cost included with Concrete Removal.

LEGEND

- Concrete Removal
- Structural Repair of Concrete (Depth equal to or less than 5 inches)
- Structural Repair of Concrete (Depth greater than 5 inches)
- Epoxy Crack Injection

BILL OF MATERIAL

ITEM	UNIT	QUANTITY
Concrete Removal	Cu. Yd.	54
Structural Repair of Concrete (Depth equal to or less than 5 inches)	Sq. Ft.	146
Structural Repair of Concrete (Depth greater than 5 inches)	Sq. Ft.	6
Epoxy Crack Injection	Foot	4
Cleaning Bridge Seats	Sq. Ft.	50
Jack and Remove Existing Bearings	Each	4

BOWMAN, BARRETT & ASSOCIATES INC.
CONSULTING ENGINEERS
Chicago, Illinois
312.228.0100
www.bbandainc.com

USER NAME =	DESIGNED - TL	REVISED -	
	CHECKED - BAK	REVISED -	
PLOT SCALE =	DRAWN - MTR	REVISED -	
PLOT DATE = 11/08/2012	CHECKED - BAK	REVISED -	

STATE OF ILLINOIS
DEPARTMENT OF TRANSPORTATION

ABUTMENT 2 REMOVAL AND REPAIR DETAILS I
STRUCTURE NO. 016-2437

SHEET NO. S-44 OF S-83 SHEETS

F.A.I. RTE.	SECTION	COUNTY	TOTAL SHEETS	SHEET NO.
94	2012-060-BR	COOK	285	207

CONTRACT NO. 60V61

ILLINOIS FED. AID PROJECT

S:\1872\05.CADD\Structural\SN 0162437\CADD Sheets\0162437-60J12-044-AB02Rem.dgn 12/7/2012 2:26:28 PM

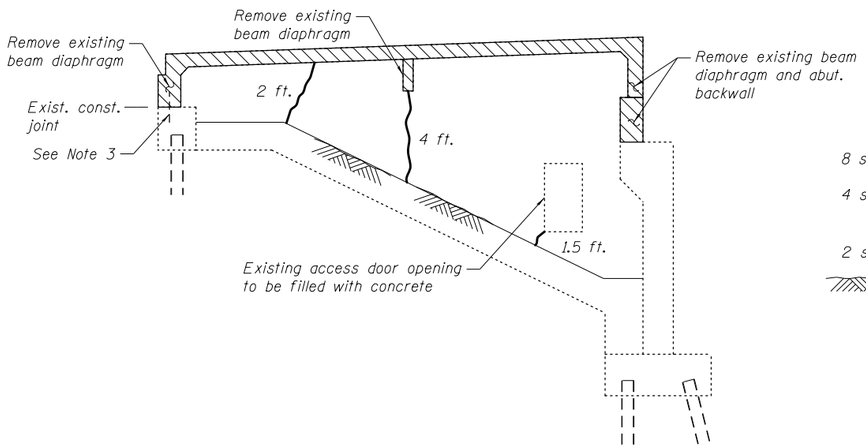

NORTH WALL ELEVATION

(Inside Face)
(PPC I-beams not shown for clarity)

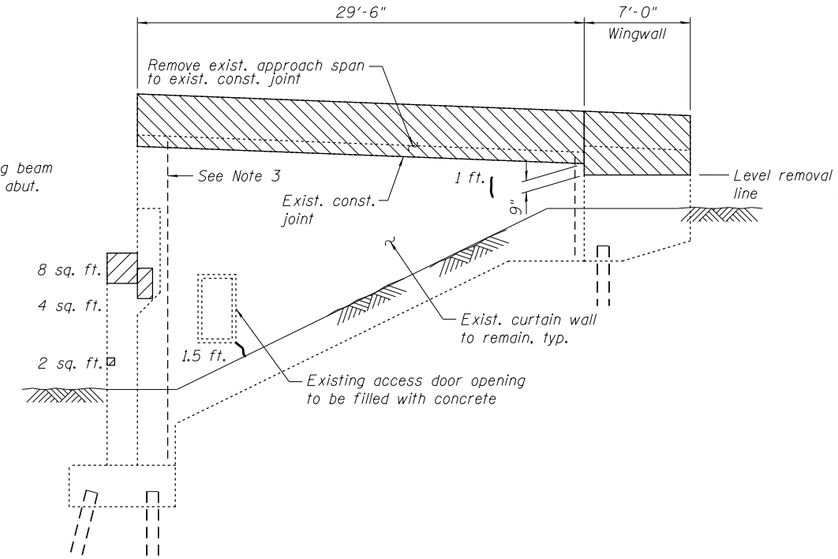

NORTH WALL ELEVATION

(Outside Face)
(Abut. backwall and beam diaphragm removal not shown for clarity)

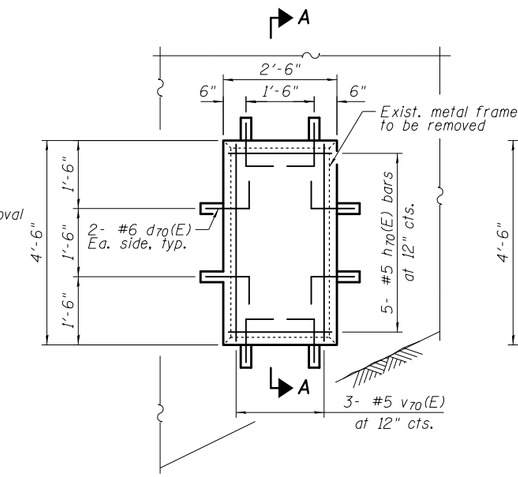

ACCESS DOOR CLOSURE DETAIL

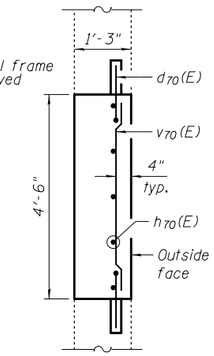

SECTION A-A

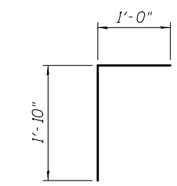

BAR d70(E)

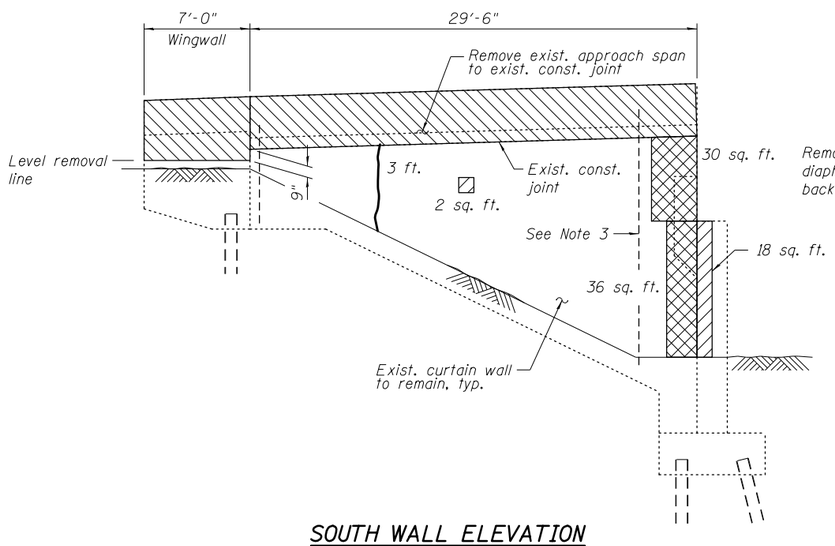

SOUTH WALL ELEVATION

(Outside Face)
(Abut. backwall and beam diaphragm removal not shown for clarity)

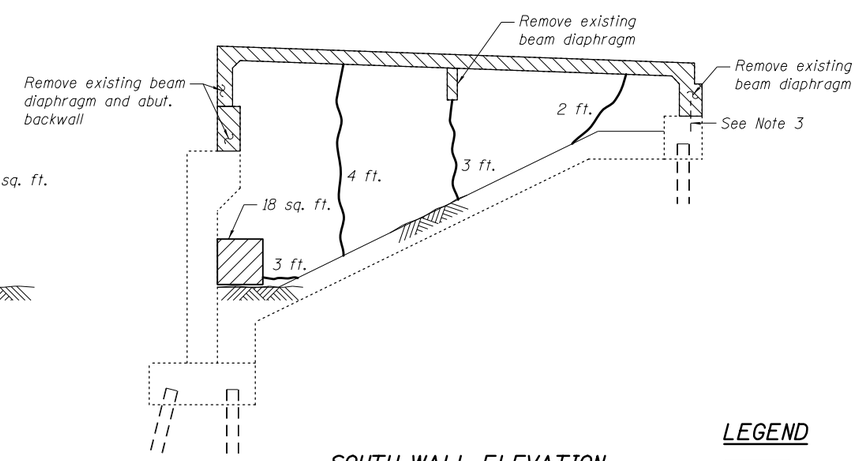

SOUTH WALL ELEVATION

(Inside Face)
(PPC I-beams not shown for clarity)

NOTES:

1. Actual quantities of repairs shall be approved by the Engineer.
2. Any existing reinforcement to remain that is damaged during removal operations shall be repaired or replaced with an approved bar splicer or anchorage system at no additional cost.
3. Reinforcement in existing abutment curtain walls and approach bent extending into removal area shall be cleaned, straightened, and incorporated into the new construction. Cost included with Concrete Removal.
4. See Sheet S-44 for Concrete Removal quantity.
5. Cost of removal of existing metal door frame shall be included in the cost of Concrete Structures.
6. Epoxy grout d70(E) bars in 9" min. drilled holes according to Section 584 of the Standard Specifications.

LEGEND

- Concrete Removal
- Structural Repair of Concrete (Depth equal to or less than 5 inches)
- Structural Repair of Concrete (Depth greater than 5 inches)
- Epoxy Crack Injection

BILL OF MATERIAL

Bar	No.	Size	Length	Shape
d70(E)	8	#6	2'-10"	Γ
h70(E)	5	#5	2'-2"	———
v70(E)	3	#5	4'-2"	———
Concrete Structures			Cu. Yd.	0.6
Reinforcement Bars, Epoxy Coated			Pound	70
Structural Repair of Concrete (Depth equal to or less than 5 inches)			Sq. Ft.	52
Structural Repair of Concrete (Depth greater than 5 inches)			Sq. Ft.	76
Epoxy Crack Injection			Foot	25

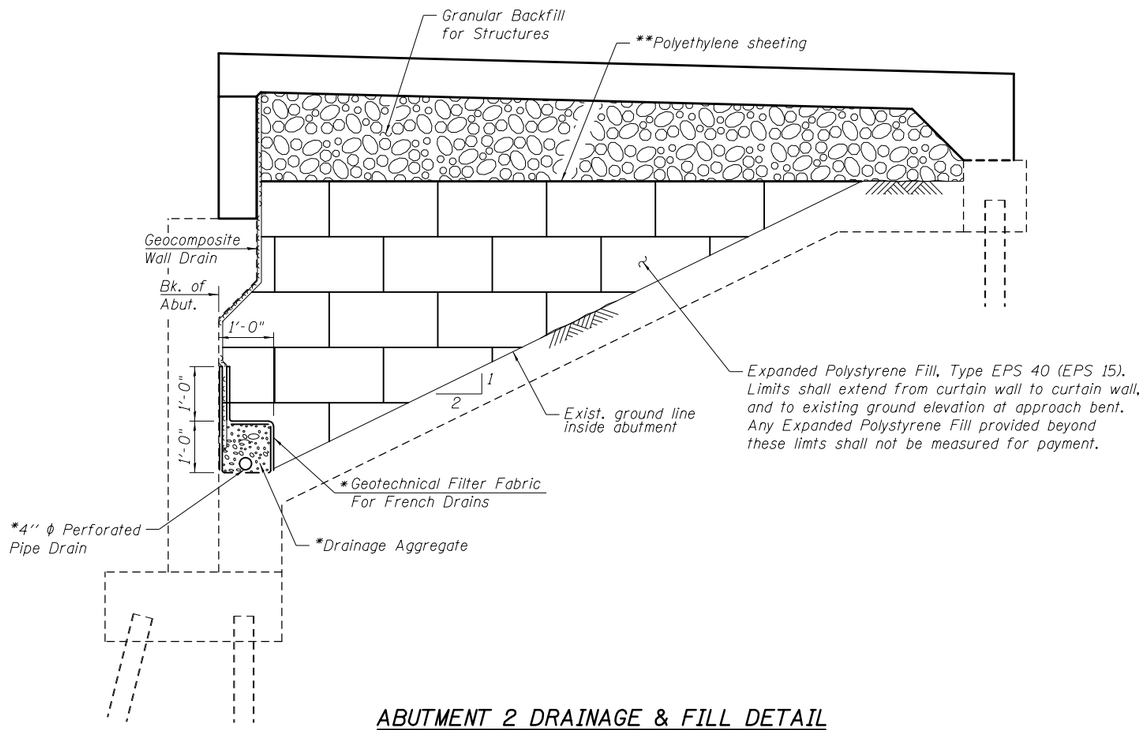

ABUTMENT 2 DRAINAGE & FILL DETAIL

(Inside Face)

*Included in the cost of Pipe Underdrains for Structures 4".

**In accordance with Article 1022.03 of the Standard Specifications. Limits shall extend to inside faces of curtain walls, from face of backwall to end of Expanded Polystyrene Fill. Included in the cost of Expanded Polystyrene Fill.

Note:
Limits of the perforated pipe drain shall extend to the outside face of both curtain walls. Core a 5" ϕ hole through the curtain walls and fill annular space around pipe drain with non-shrink grout. Ends of pipe drain shall be protected by a permanent rodent shield. Cost of coring holes, non-shrink grout, and rodent shield shall be included with Pipe Underdrains for Structures 4".

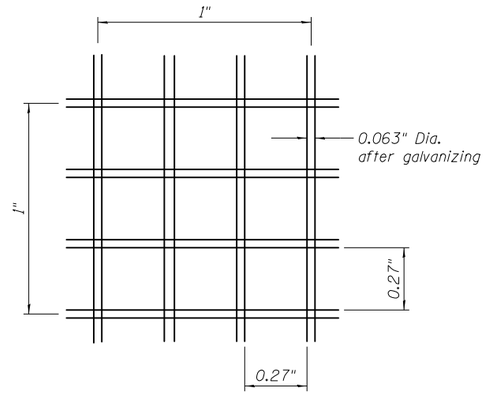

SECTION A-A

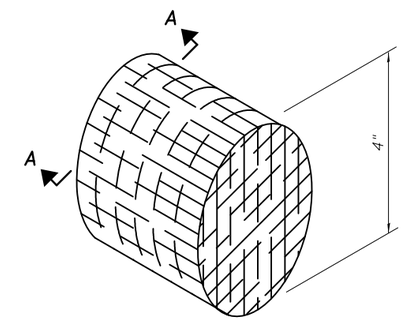

DETAIL OF RODENT SHIELD

BILL OF MATERIAL

ITEM	UNIT	QUANTITY
Granular Backfill for Structures	Cu. Yd.	90
Geocomposite Wall Drain	Sq. Yd.	43
Pipe Underdrains for Structures 4"	Foot	25
Expanded Polystyrene Fill	Cu. Yd.	145

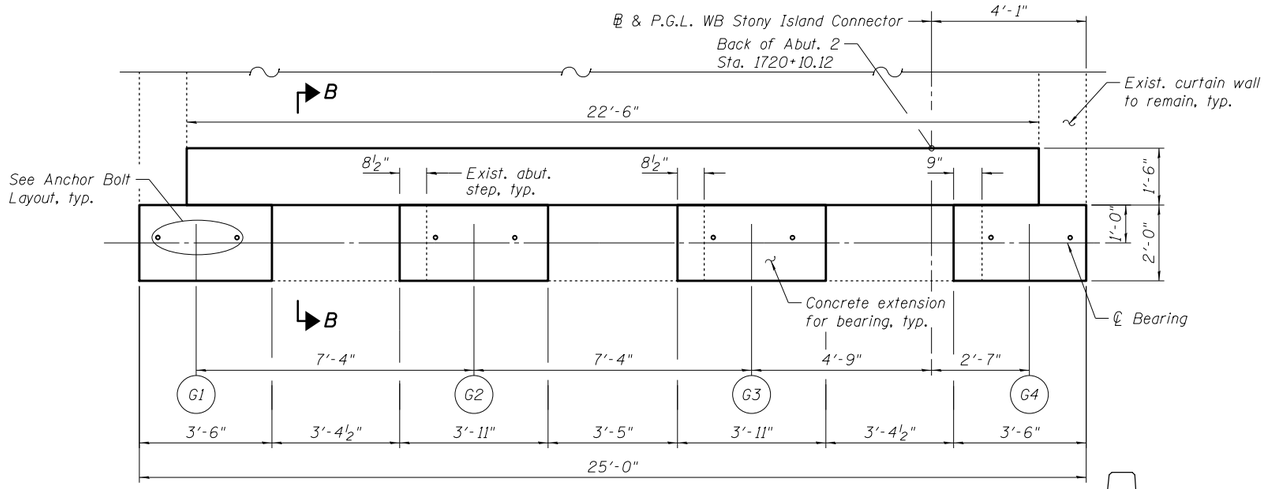

SECTION A-A

Reinf. bars not shown

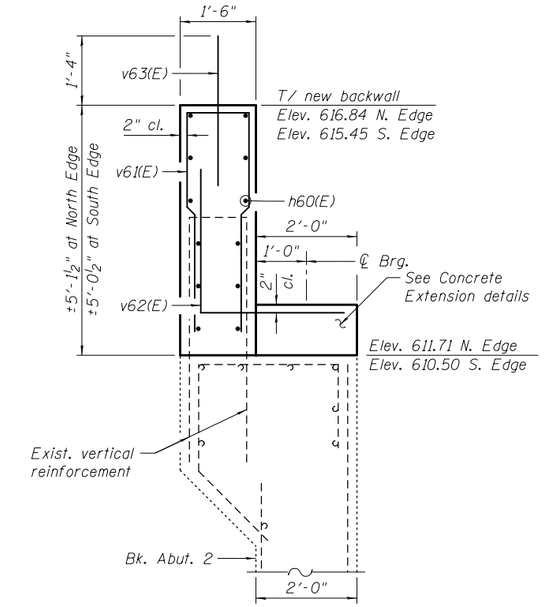

SECTION B-B

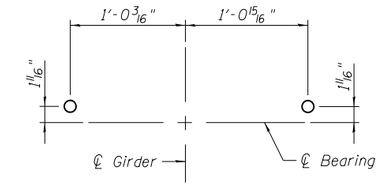

ANCHOR BOLT LAYOUT

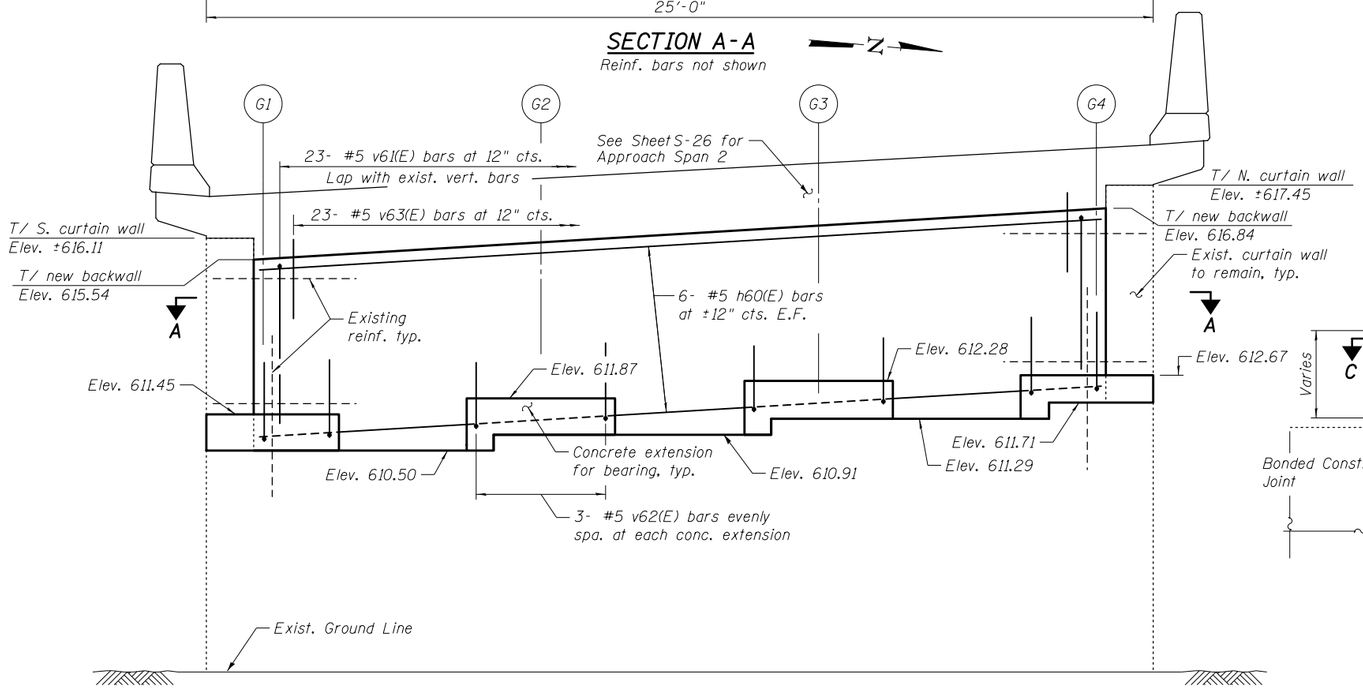

ELEVATION

(Looking West)

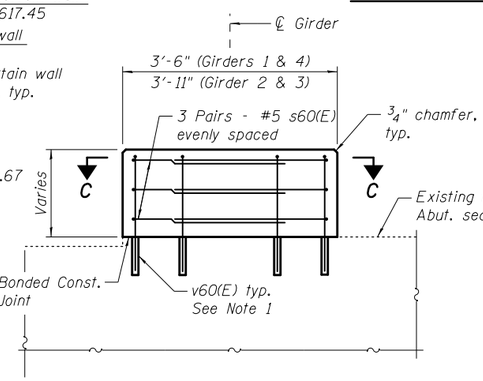

ELEVATION VIEW

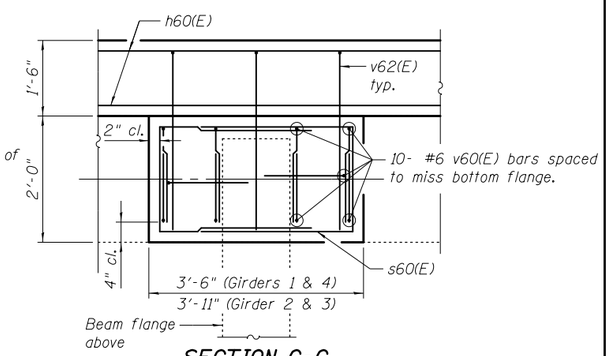

SECTION C-C

CONCRETE EXTENSIONS FOR BEARINGS

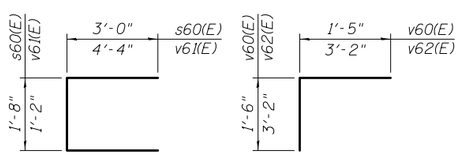

BARS s60(E) AND v61(E)

BARS v60(E) AND v62(E)

NOTE:

1. Epoxy grout v60(E) bars in 9" min. drilled holes according to Section 584 of the Standard Specifications.

BILL OF MATERIAL

Bar	No.	Size	Length	Shape
h60(E)	12	#5	22'-2"	
s60(E)	24	#5	7'-8"	
v60(E)	40	#6	2'-11"	
v61(E)	23	#5	9'-10"	
v62(E)	12	#5	6'-4"	
v63(E)	23	#5	3'-4"	
Concrete Structures			Cu. Yd.	7.6
Reinforcement Bars, Epoxy Coated			Pound	1050
Concrete Sealer			Sq. Ft.	200

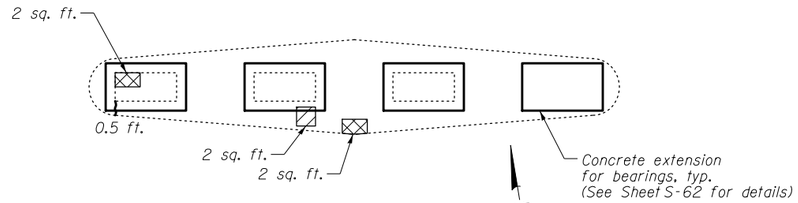

TOP VIEW - PIER 1

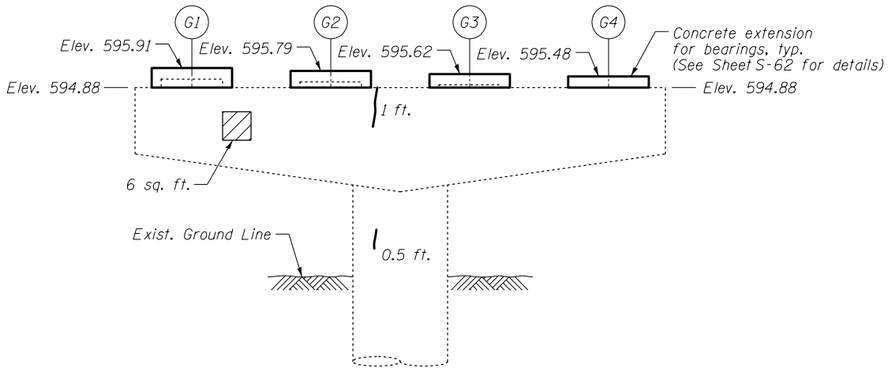

SOUTH FACE ELEVATION - PIER 1

(Looking North)

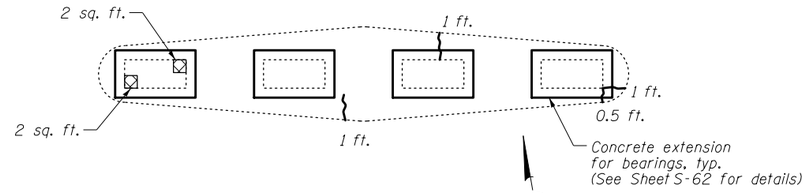

TOP VIEW - PIER 2

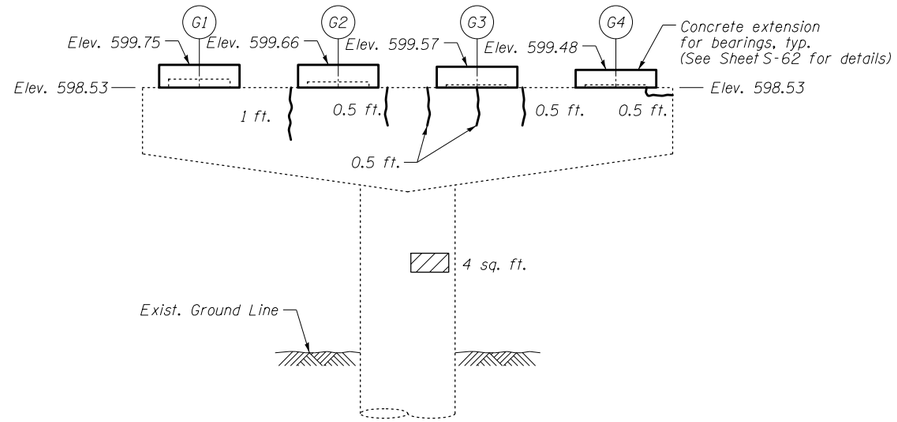

SOUTH FACE ELEVATION - PIER 2

(Looking North)

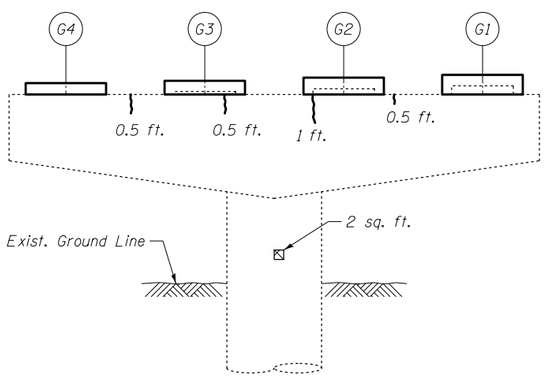

NORTH FACE ELEVATION - PIER 1

(Looking South)

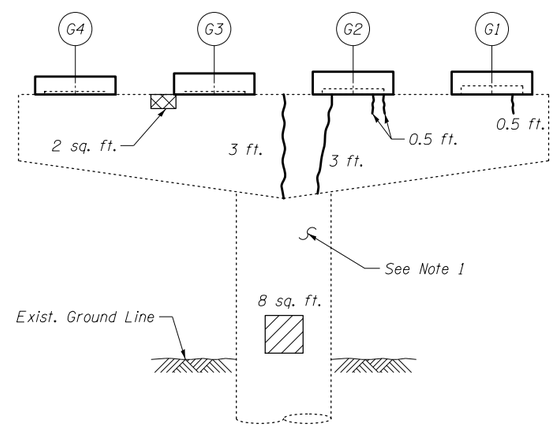

NORTH FACE ELEVATION - PIER 2

(Looking South)

NOTES:

1. Actual quantities of repairs shall be approved by the Engineer.

LEGEND

- Structural Repair of Concrete (Depth equal to or less than 5 inches)
- Structural Repair of Concrete (Depth greater than 5 inches)
- Epoxy Crack Injection

BILL OF MATERIAL

ITEM	UNIT	QUANTITY
Structural Repair of Concrete (Depth equal to or less than 5 inches)	Sq. ft.	20
Structural Repair of Concrete (Depth greater than 5 inches)	Sq. ft.	12
Epoxy Crack Injection	Foot	19
Jack and Remove Existing Bearings	Each	8

BOWMAN, BARRETT & ASSOCIATES INC.
CONSULTING ENGINEERS
Chicago, Illinois
312.228.0100
www.bbandainc.com

USER NAME =	DESIGNED - TL	REVISED -
	CHECKED - BAK	REVISED -
PLOT SCALE =	DRAWN - MTR	REVISED -
PLOT DATE = 11/08/2012	CHECKED - TL	REVISED -

STATE OF ILLINOIS
DEPARTMENT OF TRANSPORTATION

PIER 1 AND 2 REPAIR DETAILS
STRUCTURE NO. 016-2437

SHEET NO. S-48 OF S-83 SHEETS

F.A.I. RTE.	SECTION	COUNTY	TOTAL SHEETS	SHEET NO.
94	2012-060-BR	COOK	285	211

CONTRACT NO. 60V61

ILLINOIS FED. AID PROJECT

S:\1072\05_CADD\Structural\SN 0162437\CADD Sheets\0162437-60J12-948-PR01-R2.dgn 12/7/2012
2:26:21 PM

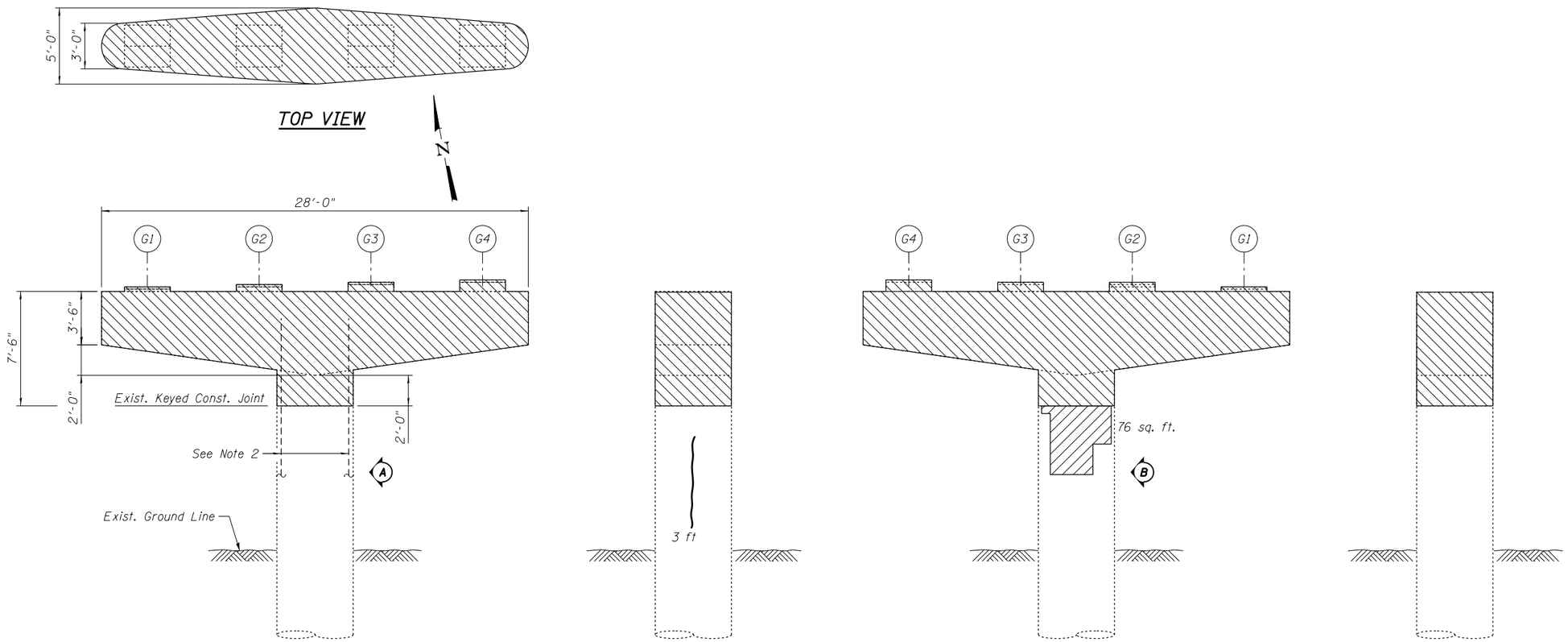

NOTES:

1. Actual quantities of repairs shall be approved by the Engineer.
2. Existing vertical reinforcement extending into the removal area shall be cleaned, straightened, and incorporated into the new construction. Any reinforcement bars that are damaged during concrete removal shall be replaced with an approved bar splicer or anchorage system. Cost included with Concrete Removal.
3. Cost of removal of existing bearings shall be included in the cost of Jacking and Cribbing.

LEGEND

Concrete Removal

Structural Repair of Concrete (Depth equal to or less than 5 inches)

Epoxy Crack Injection

BILL OF MATERIAL

ITEM	UNIT	QUANTITY
Concrete Removal	Cu. Yd.	19.8
Structural Repair of Concrete (Depth equal to or less than 5 inches)	Sq. Ft.	76
Epoxy Crack Injection	Foot	3
Jacking and Cribbing	Each	8

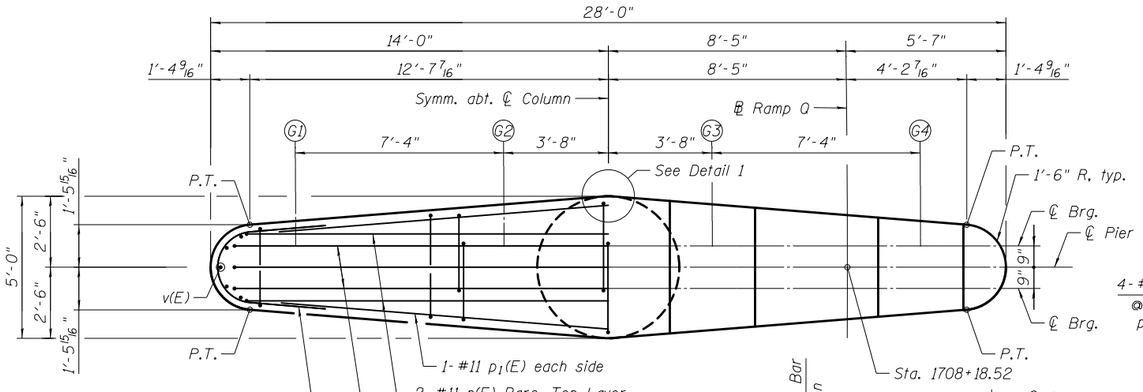

TOP PLAN

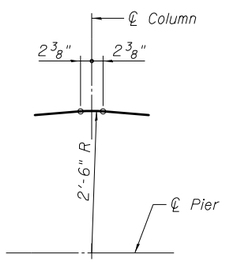

DETAIL 1

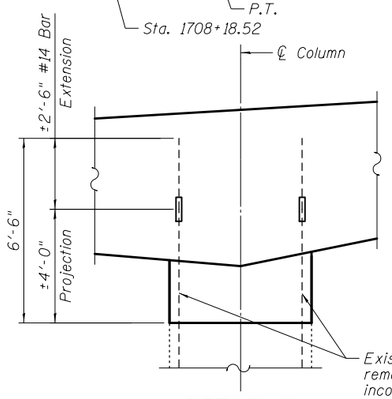

DETAIL 2

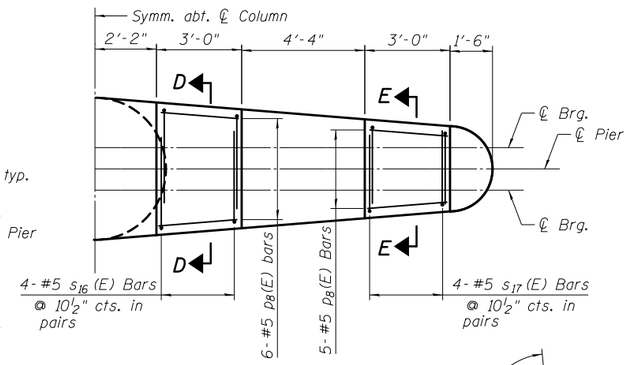

BEARING SEAT PLAN

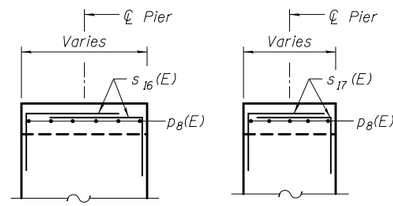

SECTION D-D

SECTION E-E

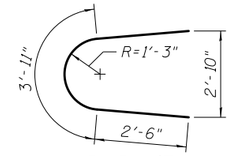

BAR u(E

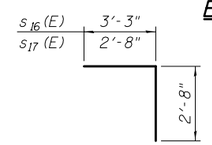

BARS s16(E) & s17(E)

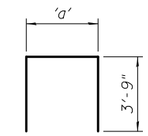

BARS s(E) thru s8(E)

Bar	'a'
s(E)	2'-10 1/2"
s1(E)	2'-10"
s2(E)	2'-9 1/2"
s3(E)	2'-8 3/4"
s4(E)	2'-8"
s5(E)	2'-7 1/2"
s6(E)	2'-6 3/4"
s7(E)	2'-6"
s8(E)	2'-5 1/2"

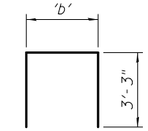

BARS s9(E) thru s15(E)

Bar	'b'
s9(E)	3'-8"
s10(E)	3'-6"
s11(E)	3'-4 1/2"
s12(E)	3'-2"
s13(E)	3'-0 1/2"
s14(E)	2'-10 1/2"
s15(E)	2'-8 1/2"

BILL OF MATERIAL

Bar	No.	Size	Length	Shape
p(E)	2	#11	29'-4"	
p1(E)	2	#11	24'-0"	
p2(E)	3	#10	30'-8"	
p3(E)	3	#11	31'-0"	
p4(E)	2	#10	29'-0"	
p5(E)	2	#8	27'-0"	
p6(E)	2	#8	25'-6"	
p7(E)	4	#8	14'-6"	
p8(E)	22	#5	2'-8"	
p9(E)	4	#5	25'-4"	
p10(E)	2	#5	17'-0"	
s(E)	8	#5	10'-4 1/2"	
s1(E)	8	#5	10'-4"	
s2(E)	8	#5	10'-3 1/2"	
s3(E)	8	#5	10'-3"	
s4(E)	8	#5	10'-2"	
s5(E)	8	#5	10'-1 1/2"	
s6(E)	8	#5	10'-1"	
s7(E)	8	#5	10'-0"	
s8(E)	8	#5	9'-11 1/2"	
s9(E)	4	#5	10'-2"	
s10(E)	4	#5	10'-0"	
s11(E)	4	#5	9'-10 1/2"	
s12(E)	4	#5	9'-8"	
s13(E)	4	#5	9'-6 1/2"	
s14(E)	4	#5	9'-4 1/2"	
s15(E)	4	#5	9'-2 1/2"	
s16(E)	8	#5	5'-11"	
s17(E)	8	#5	5'-3"	
s18(E)	4	#4	16'-4"	
u(E)	8	#5	8'-11"	
v(E)	10	#5	3'-2"	
Concrete Structures			Cu. Yd.	22.5
Reinforcement Bars, Epoxy Coated			Pound	3,640
Concrete Sealer			Sq. Ft.	550

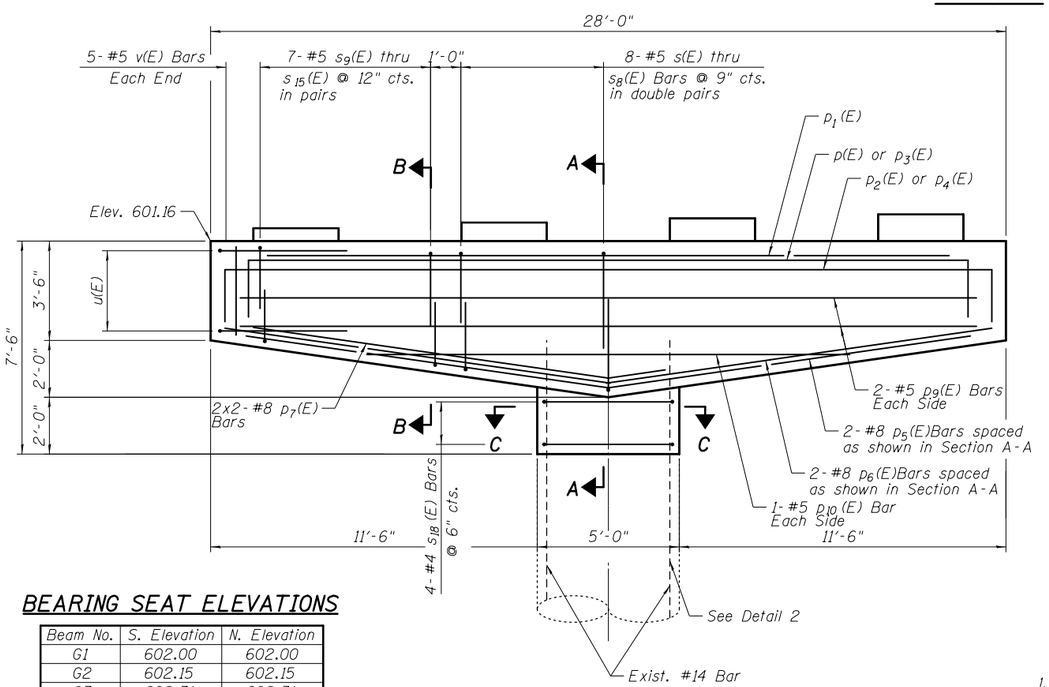

ELEVATION
(Looking North)

BEARING SEAT ELEVATIONS

Beam No.	S. Elevation	N. Elevation
G1	602.00	602.00
G2	602.15	602.15
G3	602.31	602.31
G4	602.49	602.49

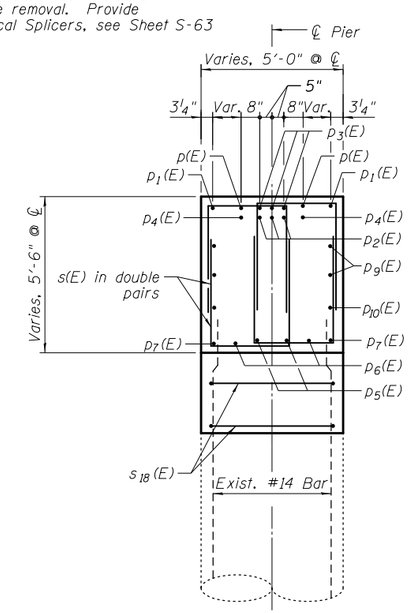

SECTION A-A

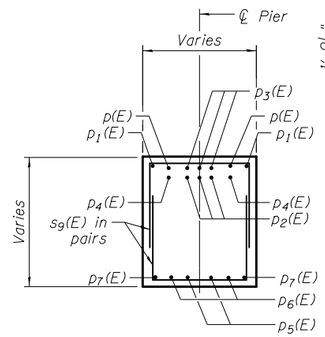

SECTION B-B

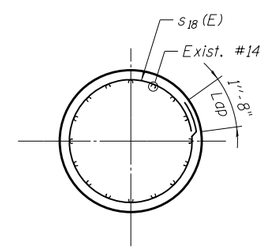

SECTION C-C

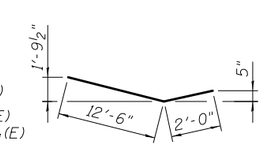

BARS p7(E)

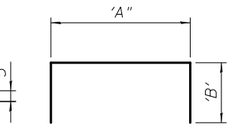

BARS p(E), p2(E), p3(E) & p4(E)

Bar	'A'	'B'
p(E)	25'-4"	2'-0"
p2(E)	27'-0"	1'-10"
p3(E)	27'-0"	2'-0"
p4(E)	25'-4"	1'-10"

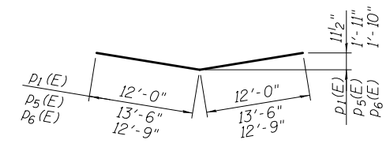

BARS p1(E), p5(E) & p6(E)

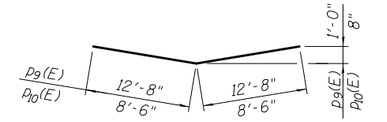

BARS p9(E) & p10(E)

Note:

1. See S-38 & S-39 for Anchor Bolt Layout and dimensions.

S:\1072\05_CADD\Structural\SN 0162437\CADD Sheets\0162437-60J12-050-PR03.dgn 12/7/2012 2:26:22 PM

BOWMAN, BARRETT & ASSOCIATES INC.
CONSULTING ENGINEERS
Chicago, Illinois
312.228.0100
www.bbandainc.com

USER NAME =	DESIGNED - SF	REVISED -	
	CHECKED - BAK	REVISED -	
PLOT SCALE =	DRAWN - MTR	REVISED -	
PLOT DATE = 11/08/2012	CHECKED - SF	REVISED -	

STATE OF ILLINOIS
DEPARTMENT OF TRANSPORTATION

PIER 3 CAP RECONSTRUCTION DETAILS
STRUCTURE NO. 016-2437

SHEET NO. S-50 OF S-83 SHEETS

F.A.I. RTE.	SECTION	COUNTY	TOTAL SHEETS	SHEET NO.
94	2012-060-BR	COOK	285	213
		CONTRACT NO. 60V61		
		ILLINOIS FED. AID PROJECT		

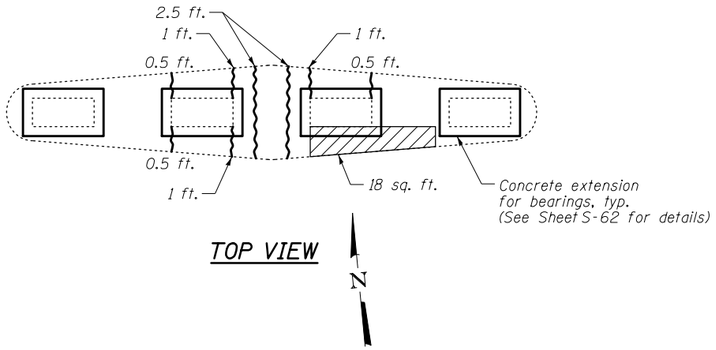

TOP VIEW

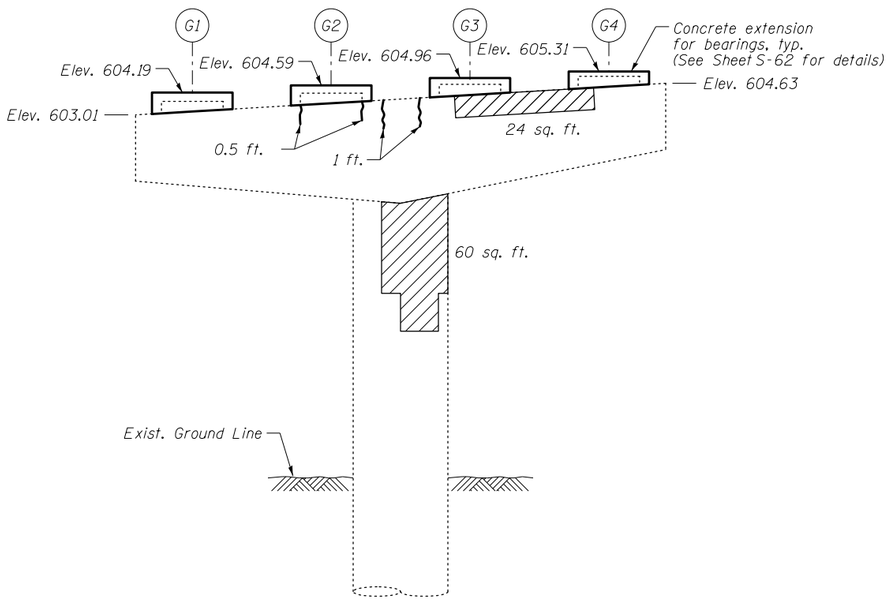

SOUTH FACE ELEVATION

(Looking North)

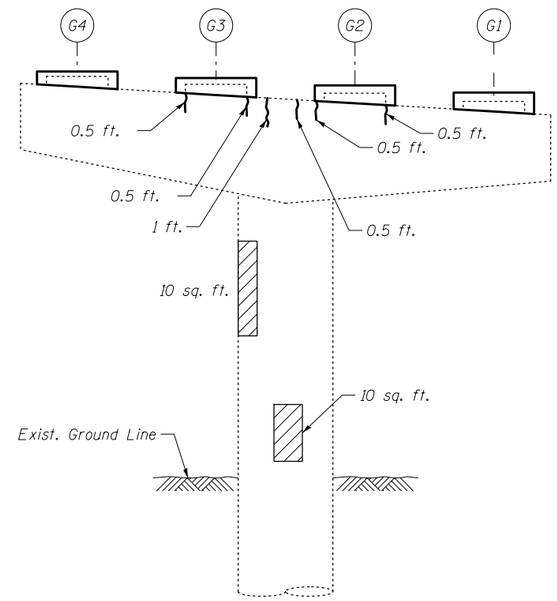

NORTH FACE ELEVATION

(Looking South)

NOTES:

1. Actual quantities of repairs shall be approved by the Engineer.

LEGEND

Structural Repair of Concrete (Depth equal to or less than 5 inches)

Epoxy Crack Injection

BILL OF MATERIAL

ITEM	UNIT	QUANTITY
Structural Repair of Concrete (Depth equal to or less than 5 inches)	Sq. Ft.	122
Epoxy Crack Injection	Foot	16
Jack and Remove Existing Bearings	Each	4

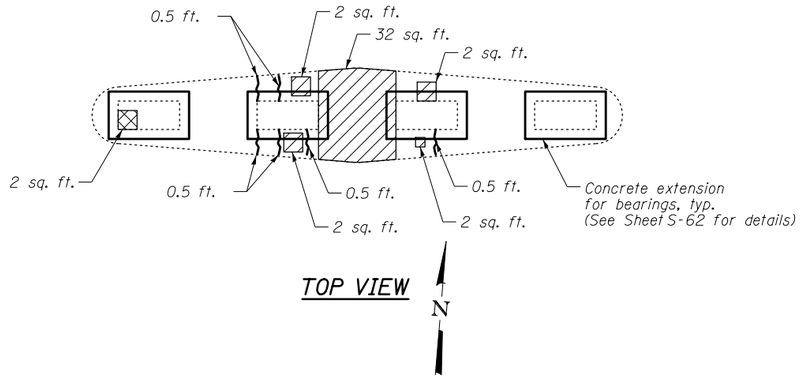

TOP VIEW

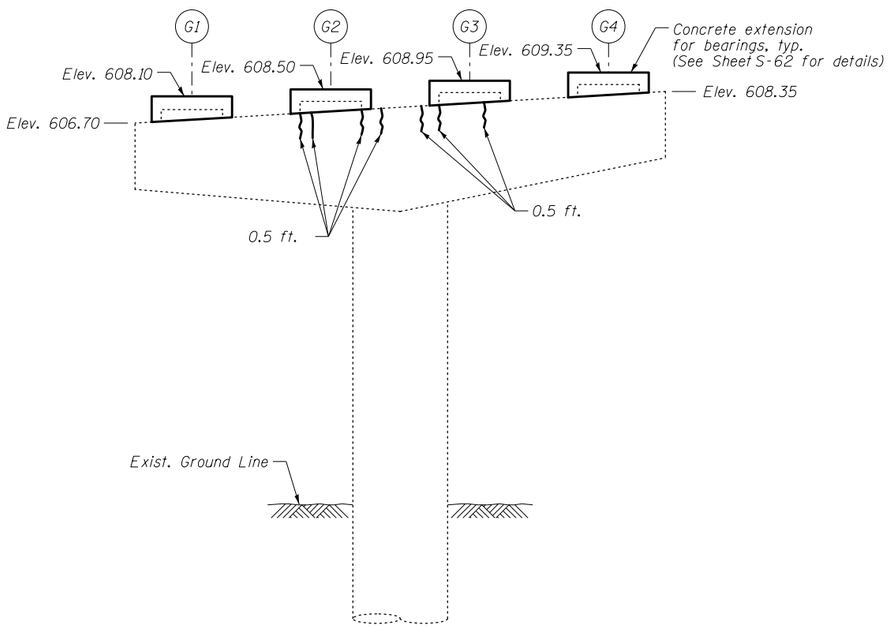

SOUTH FACE ELEVATION

(Looking North)

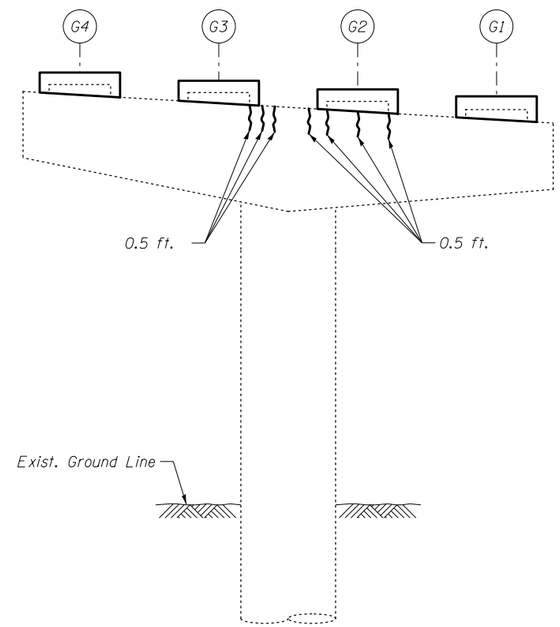

NORTH FACE ELEVATION

(Looking South)

NOTES:

1. Actual quantities of repairs shall be approved by the Engineer.

LEGEND

Structural Repair of Concrete (Depth equal to or less than 5 inches)

Structural Repair of Concrete (Depth greater than 5 inches)

Epoxy Crack Injection

BILL OF MATERIAL

ITEM	UNIT	QUANTITY
Structural Repair of Concrete (Depth equal to or less than 5 inches)	Sq. Ft.	40
Structural Repair of Concrete (Depth greater than 5 inches)	Sq. Ft.	2
Epoxy Crack Injection	Foot	10
Jack and Remove Existing Bearings	Each	4

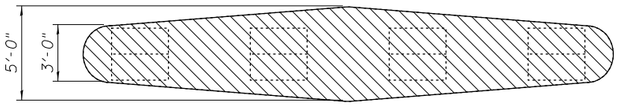

TOP VIEW

N

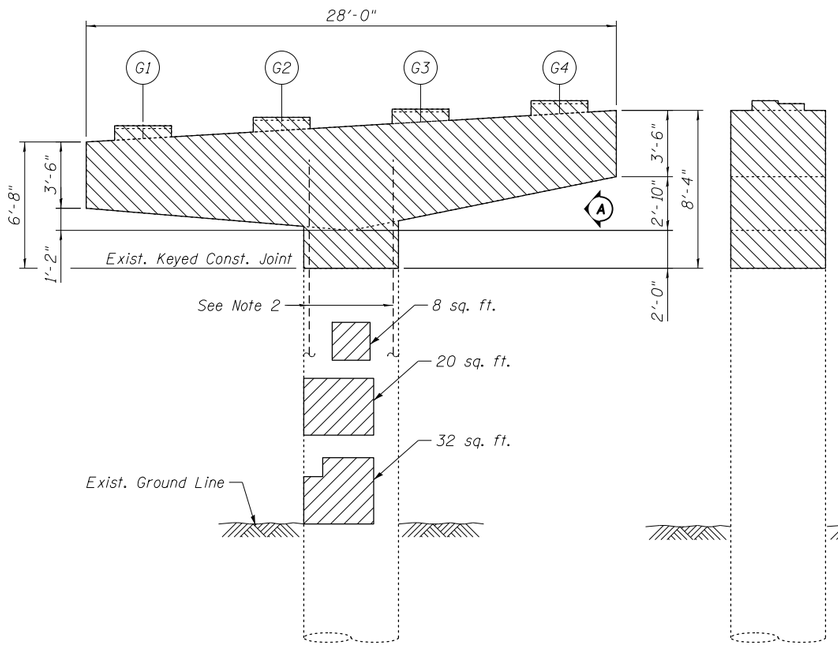

SOUTH FACE ELEVATION
(Looking North)

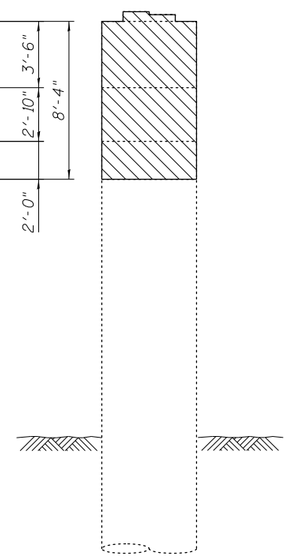

VIEW A
(Looking West)

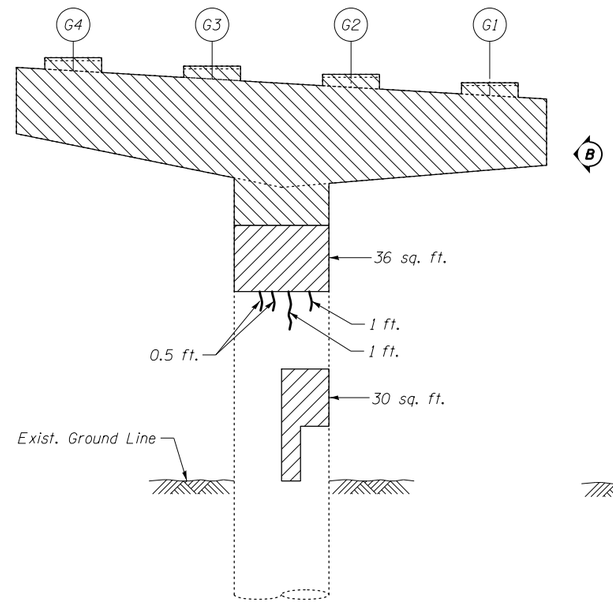

NORTH FACE ELEVATION
(Looking South)

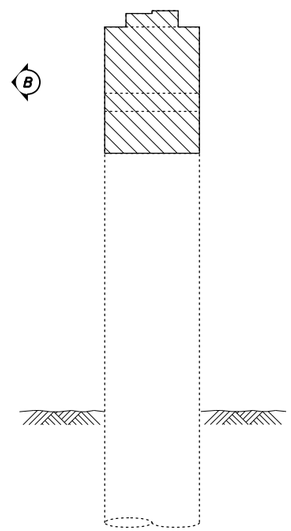

VIEW B
(Looking East)

NOTES:

1. Actual quantities of repairs shall be approved by the Engineer.
2. Existing vertical reinforcement extending into the removal area shall be cleaned, straightened, and incorporated into the new construction. Any reinforcement bars that are damaged during concrete removal shall be replaced with an approved bar splicer or anchorage system. Cost included with Concrete Removal.
3. Cost of removal of existing bearings shall be included in the cost of Jacking and Cribbing.

LEGEND

Concrete Removal

Structural Repair of Concrete (Depth equal to or less than 5 inches)

Epoxy Crack Injection

BILL OF MATERIAL

ITEM	UNIT	QUANTITY
Concrete Removal	Cu. Yd.	19.8
Structural Repair of Concrete (Depth equal to or less than 5 inches)	Sq. Ft.	126
Epoxy Crack Injection	Foot	3
Jacking and Cribbing	Each	8

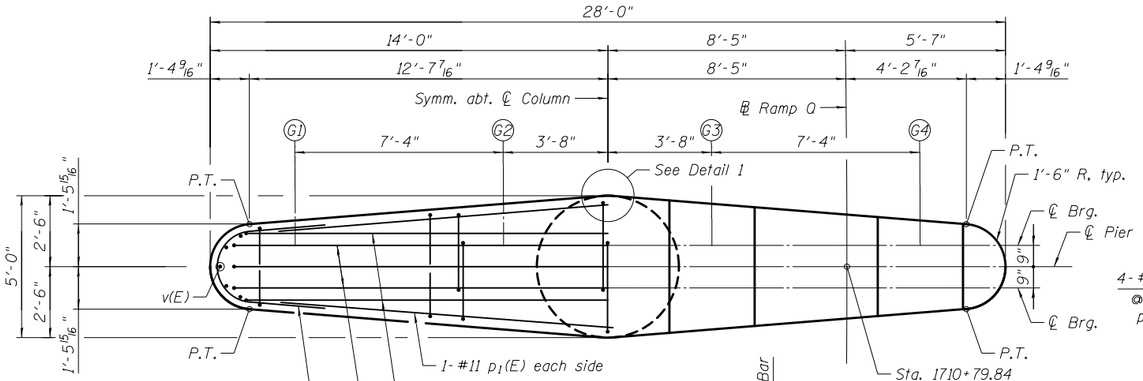

TOP PLAN

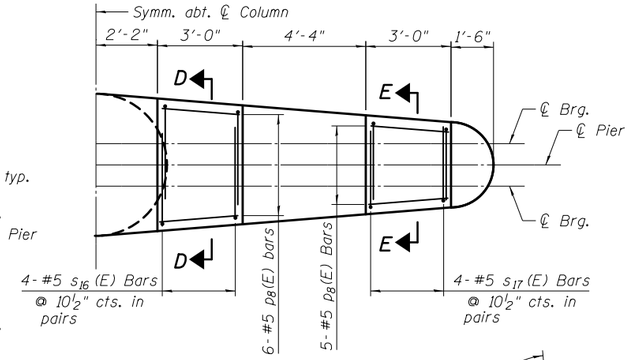

BEARING SEAT PLAN

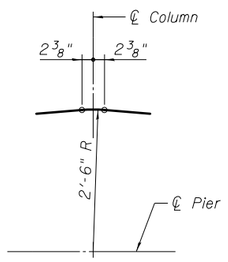

DETAIL 1

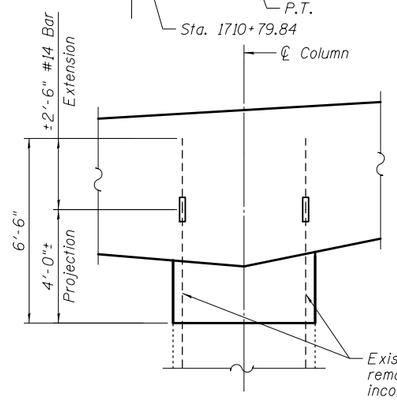

DETAIL 2

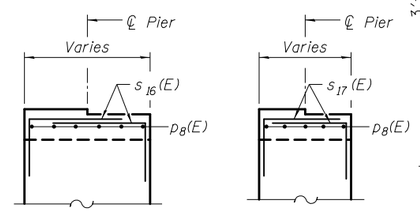

SECTION D-D

SECTION E-E

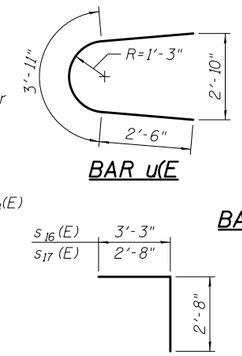

BAR u(E

BARS s16(E) & s17(E)

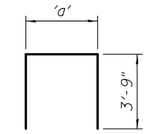

BARS s(E) thru s8(E)

Bar	'a'
s(E)	2'-10 1/2"
s1(E)	2'-10"
s2(E)	2'-9 1/2"
s3(E)	2'-8 3/4"
s4(E)	2'-8"
s5(E)	2'-7 1/2"
s6(E)	2'-6 3/4"
s7(E)	2'-6"
s8(E)	2'-5 1/2"

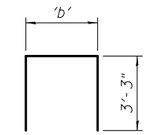

BARS s9(E) thru s15(E)

Bar	'b'
s9(E)	3'-8"
s10(E)	3'-6"
s11(E)	3'-4 1/2"
s12(E)	3'-2"
s13(E)	3'-0 1/2"
s14(E)	2'-10 1/2"
s15(E)	2'-8 1/2"

BILL OF MATERIAL

Bar	No.	Size	Length	Shape
p(E)	2	#11	29'-4"	
p1(E)	2	#11	24'-0"	
p2(E)	3	#10	30'-8"	
p3(E)	3	#11	31'-0"	
p4(E)	2	#10	29'-0"	
p5(E)	2	#8	27'-0"	
p6(E)	2	#8	25'-6"	
p7(E)	4	#8	14'-6"	
p8(E)	22	#5	2'-8"	
p9(E)	4	#5	25'-4"	
p10(E)	2	#5	17'-0"	
s(E)	8	#5	10'-4 1/2"	
s1(E)	8	#5	10'-4"	
s2(E)	8	#5	10'-3 1/2"	
s3(E)	8	#5	10'-3"	
s4(E)	8	#5	10'-2"	
s5(E)	8	#5	10'-1 1/2"	
s6(E)	8	#5	10'-1"	
s7(E)	8	#5	10'-0"	
s8(E)	8	#5	9'-11 1/2"	
s9(E)	4	#5	10'-2"	
s10(E)	4	#5	10'-0"	
s11(E)	4	#5	9'-10 1/2"	
s12(E)	4	#5	9'-8"	
s13(E)	4	#5	9'-6 1/2"	
s14(E)	4	#5	9'-4 1/2"	
s15(E)	4	#5	9'-2 1/2"	
s16(E)	8	#5	5'-11"	
s17(E)	8	#5	5'-4"	
s18(E)	4	#4	16'-4"	
u(E)	8	#5	8'-11"	
v(E)	10	#5	3'-2"	
Concrete Structures			Cu. Yd.	23.0
Reinforcement Bars, Epoxy Coated			Pound	3,640
Concrete Sealer			Sq. Ft.	560

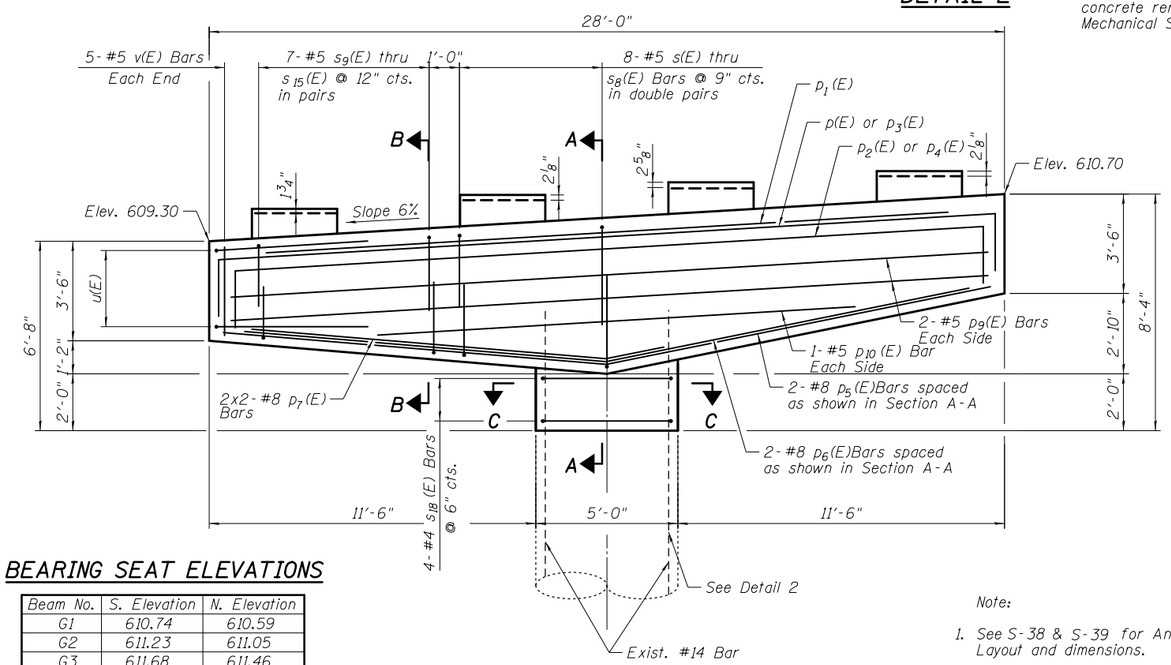

ELEVATION
(Looking North)

BEARING SEAT ELEVATIONS

Beam No.	S. Elevation	N. Elevation
G1	610.74	610.59
G2	611.23	611.05
G3	611.68	611.46
G4	612.07	611.89

Note:

1. See S-38 & S-39 for Anchor Bolt Layout and dimensions.

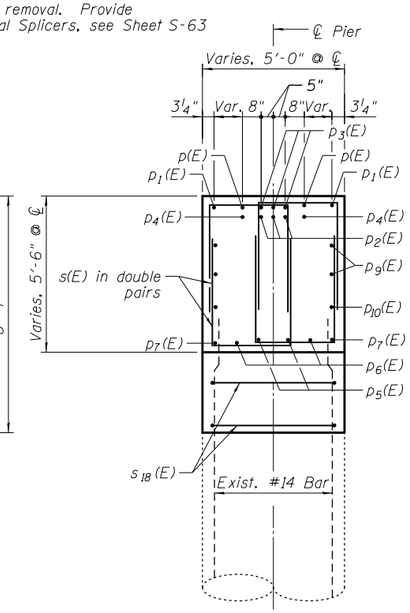

SECTION A-A

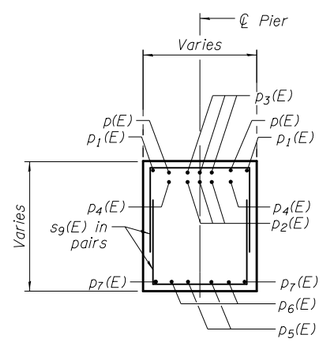

SECTION B-B

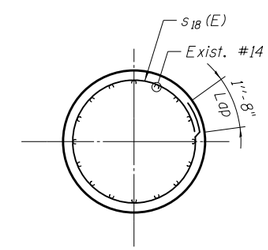

SECTION C-C

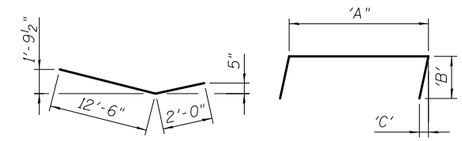

BARS p7(E)

BARS p(E), p2(E), p3(E) & p4(E)

Bar	'A'	'B'	'C'
p(E)	25'-4"	2'-0"	1 1/2"
p2(E)	27'-0"	1'-10"	1 1/2"
p3(E)	27'-0"	2'-0"	1 1/2"
p4(E)	25'-4"	1'-10"	1 1/2"

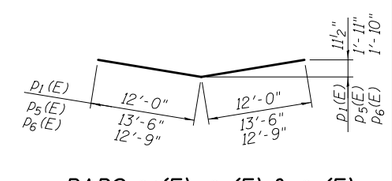

BARS p1(E), p5(E) & p6(E)

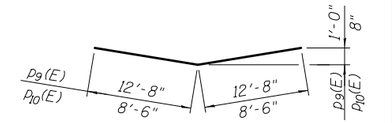

BARS p9(E) & p10(E)

S:\1072\05.CADD\Structural\SN 0162437\CADD Sheets\0162437-6DJ12-054-PR06.dgn 12/7/2012 2:26:24 PM

BOWMAN, BARRETT & ASSOCIATES INC. CONSULTING ENGINEERS Chicago, Illinois 312.228.0100 www.bbandainc.com	USER NAME =	DESIGNED - SF	REVISED -
		CHECKED - BAK	REVISED -
	PLOT SCALE =	DRAWN - MTR	REVISED -
	PLOT DATE = 11/08/2012	CHECKED - SF	REVISED -

STATE OF ILLINOIS
DEPARTMENT OF TRANSPORTATION

PIER 6 CAP RECONSTRUCTION DETAILS
STRUCTURE NO. 016-2437
SHEET NO. S-54 OF S-83 SHEETS

F.A.I. RTE.	SECTION	COUNTY	TOTAL SHEETS	SHEET NO.
94	2012-060-BR	COOK	285	217
		CONTRACT NO. 60V61		
		ILLINOIS FED. AID PROJECT		

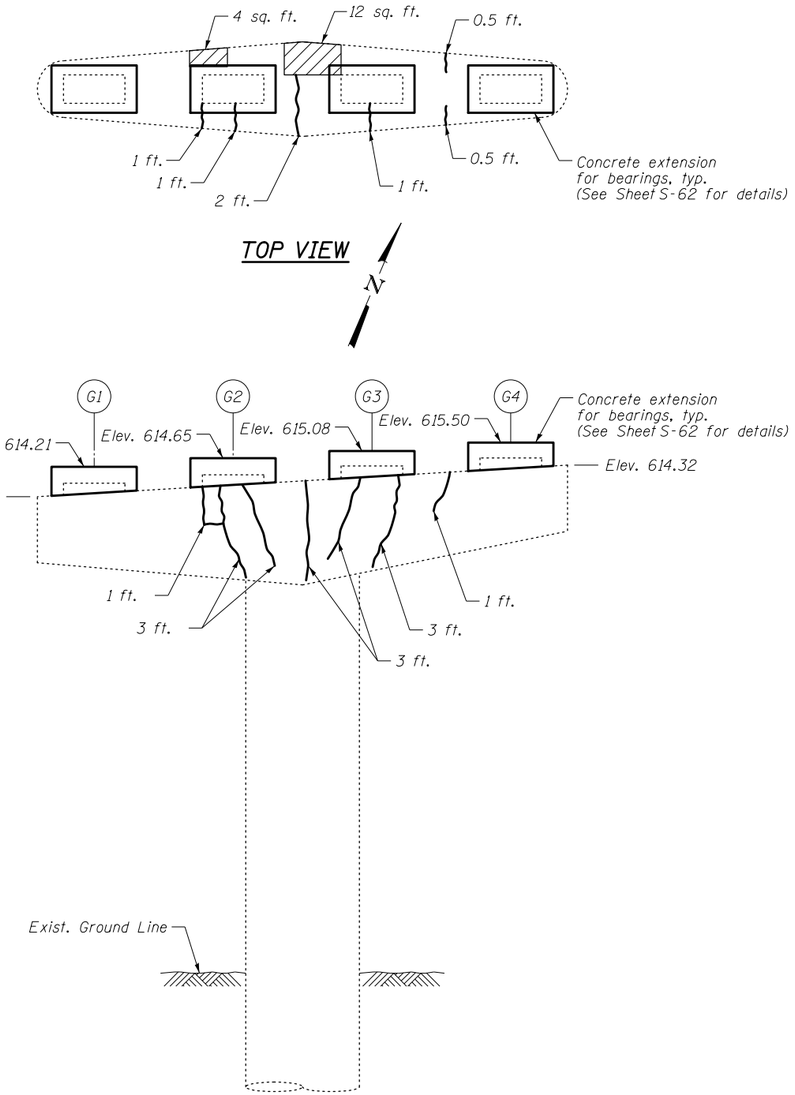

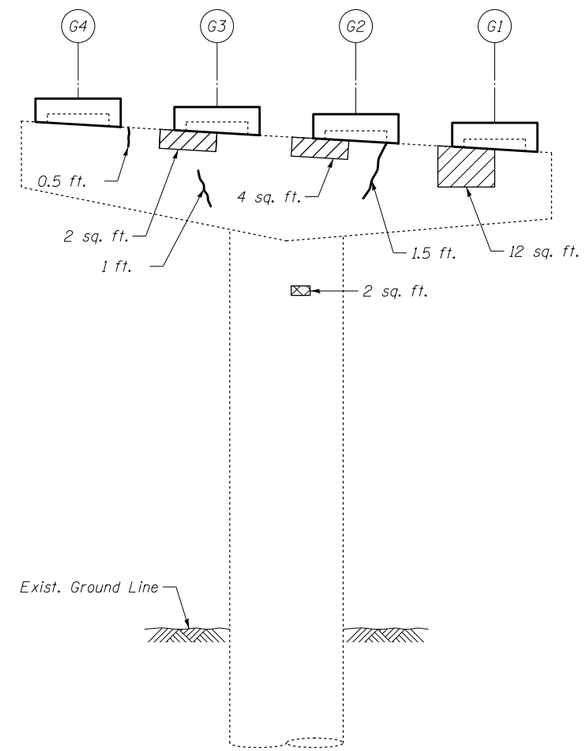

NOTES:

1. Actual quantities of repairs shall be approved by the Engineer.

LEGEND

Structural Repair of Concrete (Depth equal to or less than 5 inches)

Structural Repair of Concrete (Depth greater than 5 inches)

Epoxy Crack Injection

BILL OF MATERIAL

ITEM	UNIT	QUANTITY
Structural Repair of Concrete (Depth equal to or less than 5 inches)	Sq. Ft.	34
Structural Repair of Concrete (Depth greater than 5 inches)	Sq. Ft.	2
Epoxy Crack Injection	Foot	26
Jack and Remove Existing Bearings	Each	4

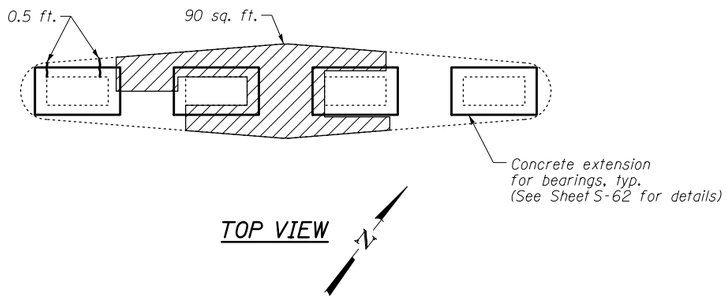

TOP VIEW

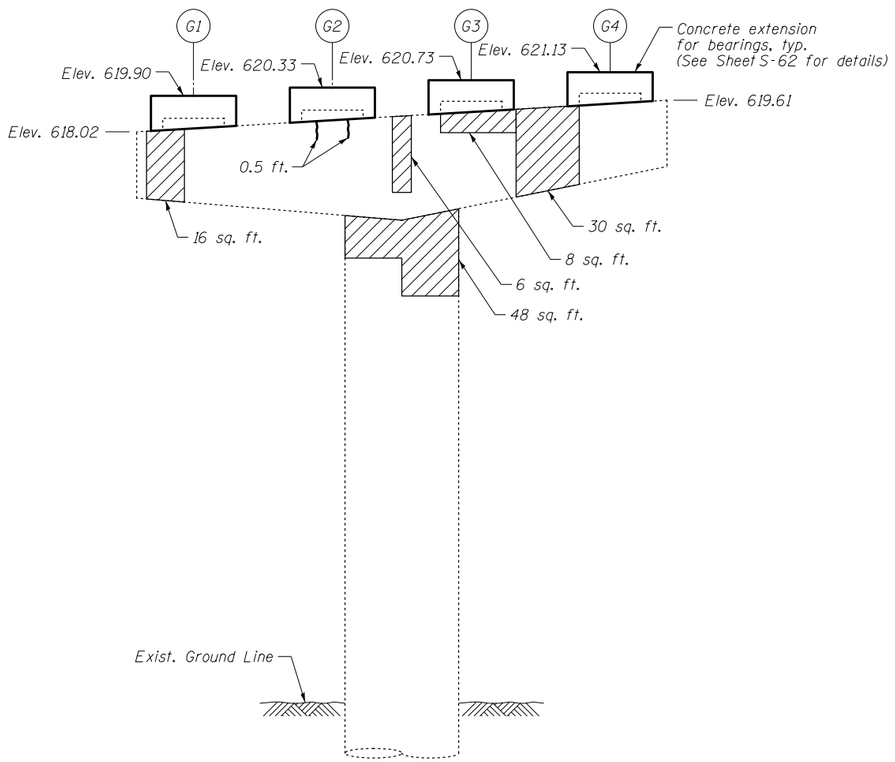

EAST FACE ELEVATION

(Looking West)

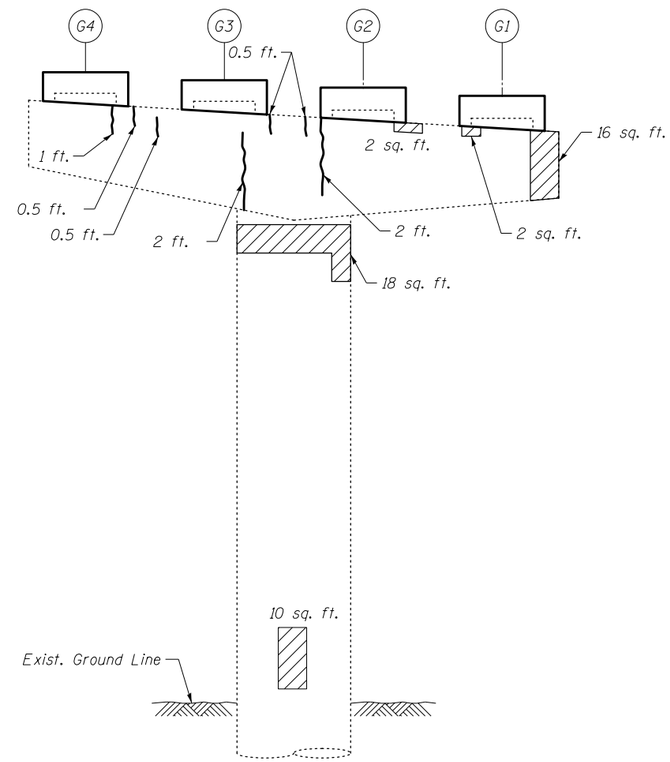

WEST FACE ELEVATION

(Looking East)

NOTES:

1. Actual quantities of repairs shall be approved by the Engineer.

LEGEND

Structural Repair of Concrete
(Depth equal to or less than 5 inches)

Epoxy Crack Injection

BILL OF MATERIAL

ITEM	UNIT	QUANTITY
Structural Repair of Concrete (Depth equal to or less than 5 inches)	Sq. Ft.	246
Epoxy Crack Injection	Foot	9
Jack and Remove Existing Bearings	Each	4

S:\1072\05_CADD\Structural\SN 0162437\CADD Sheets\0162437-60J12-056-PR08.dgn 12/7/2012 2:26:25 PM

BOWMAN, BARRETT & ASSOCIATES INC.
CONSULTING ENGINEERS
Chicago, Illinois
312.228.0100
www.bbandainc.com

USER NAME =	DESIGNED - TL	REVISED -	
	CHECKED - BAK	REVISED -	
PLOT SCALE =	DRAWN - MTR	REVISED -	
PLOT DATE = 11/08/2012	CHECKED - TL	REVISED -	

STATE OF ILLINOIS
DEPARTMENT OF TRANSPORTATION

PIER 8 REPAIR DETAILS
STRUCTURE NO. 016-2437

SHEET NO. S-56 OF S-83 SHEETS

F.A.I. RTE.	SECTION	COUNTY	TOTAL SHEETS	SHEET NO.
94	2012-060-BR	COOK	285	219
		CONTRACT NO. 60V61		
	ILLINOIS FED. AID PROJECT			

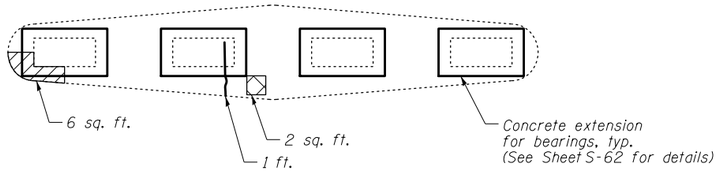

TOP VIEW

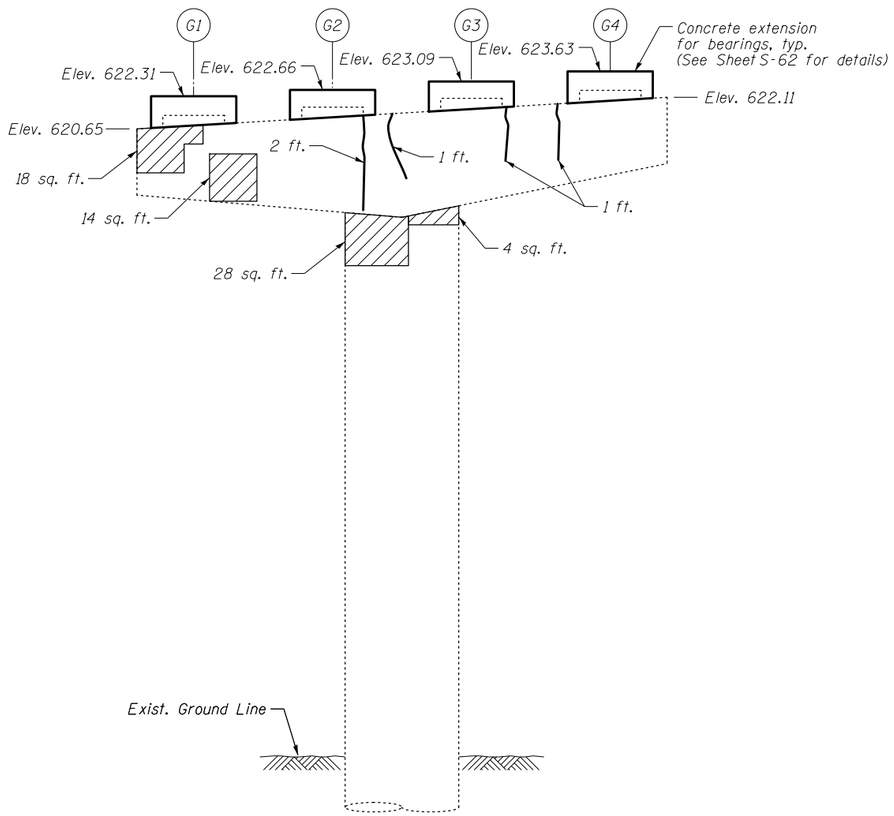

EAST FACE ELEVATION

(Looking West)

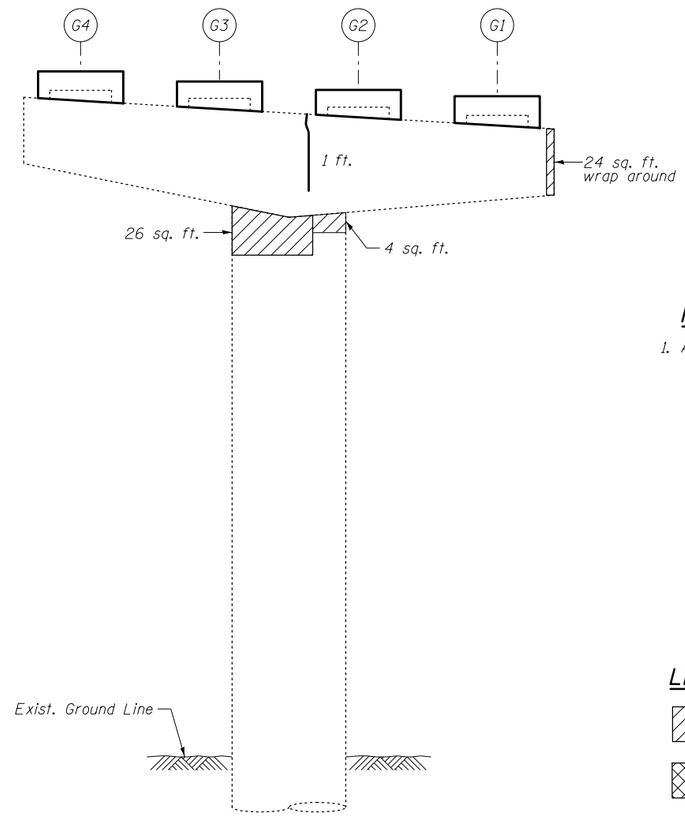

WEST FACE ELEVATION

(Looking East)

NOTES:

1. Actual quantities of repairs shall be approved by the Engineer.

LEGEND

Structural Repair of Concrete (Depth equal to or less than 5 inches)

Structural Repair of Concrete (Depth greater than 5 inches)

Epoxy Crack Injection

BILL OF MATERIAL

ITEM	UNIT	QUANTITY
Structural Repair of Concrete (Depth equal to or less than 5 inches)	Sq. Ft.	124
Structural Repair of Concrete (Depth greater than 5 inches)	Sq. Ft.	2
Epoxy Crack Injection	Foot	7
Jack and Remove Existing Bearings	Each	4

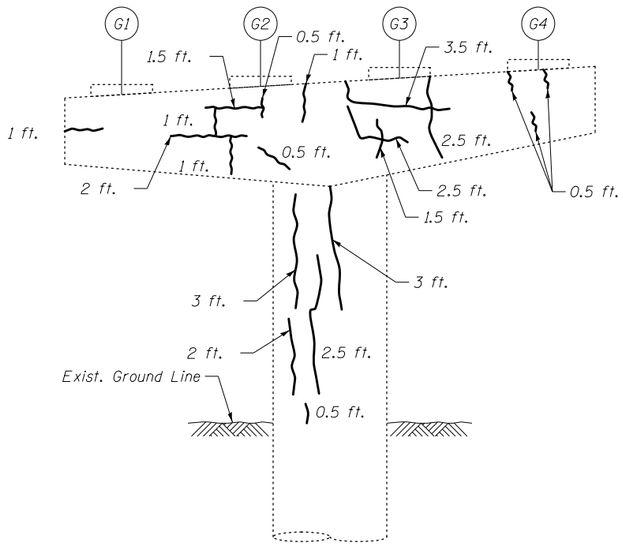

EAST FACE ELEVATION

(Looking West)

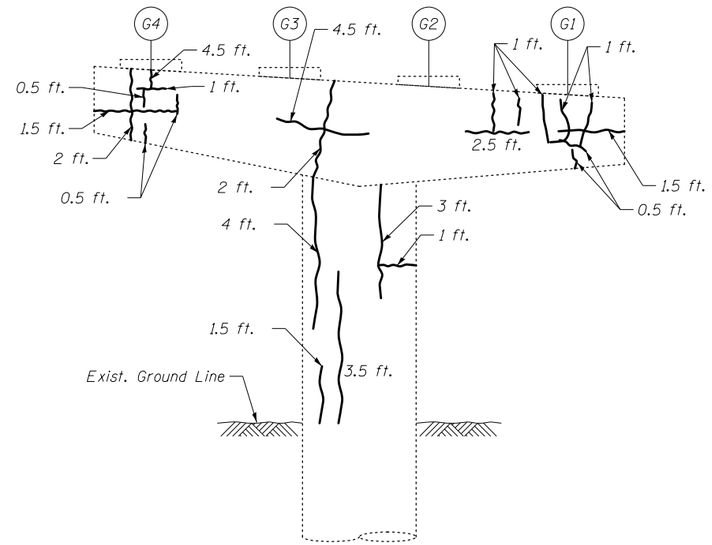

WEST FACE ELEVATION

(Looking East)

NOTES:

1. Actual quantities of repairs shall be approved by the Engineer.

LEGEND

Epoxy Crack Injection

BILL OF MATERIAL

ITEM	UNIT	QUANTITY
Epoxy Crack Injection	Foot	71

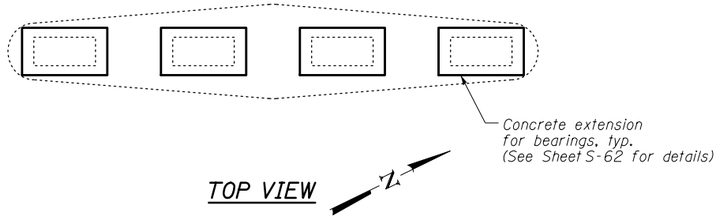

TOP VIEW

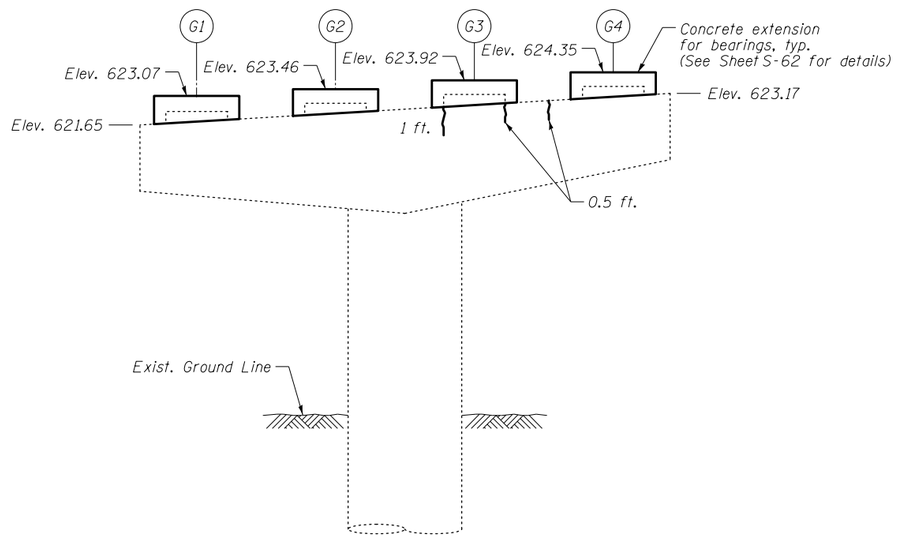

EAST FACE ELEVATION

(Looking West)

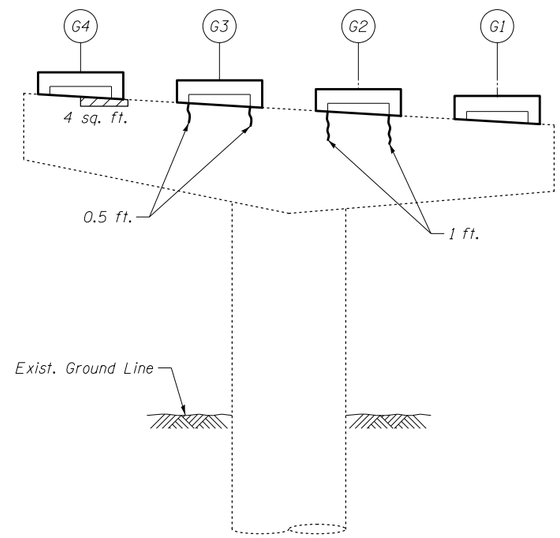

WEST FACE ELEVATION

(Looking East)

NOTES:

1. Actual quantities of repairs shall be approved by the Engineer.

LEGEND

Structural Repair of Concrete
(Depth equal to or less than 5 inches)

Epoxy Crack Injection

BILL OF MATERIAL

ITEM	UNIT	QUANTITY
Structural Repair of Concrete (Depth equal to or less than 5 inches)	Sq. Ft.	4
Epoxy Crack Injection	Foot	5
Jack and Remove Existing Bearings	Each	4

S:\1072\05.CADD\Structural\SN 0162437\CADD Sheets\0162437-60J12-059-PR11.dgn 12/7/2012 2:26:26 PM

BOWMAN, BARRETT & ASSOCIATES INC.
CONSULTING ENGINEERS
Chicago, Illinois
312.228.0100
www.bbandainc.com

USER NAME =	DESIGNED - TL	REVISED -	
	CHECKED - BAK	REVISED -	
PLOT SCALE =	DRAWN - MTR	REVISED -	
PLOT DATE = 11/08/2012	CHECKED - TL	REVISED -	

STATE OF ILLINOIS
DEPARTMENT OF TRANSPORTATION

PIER 11 REPAIR DETAILS
STRUCTURE NO. 016-2437

SHEET NO. S-59 OF S-83 SHEETS

F.A.I. RTE.	SECTION	COUNTY	TOTAL SHEETS	SHEET NO.
94	2012-060-BR	COOK	285	222
		CONTRACT NO. 60V61		
	ILLINOIS	FED. AID PROJECT		

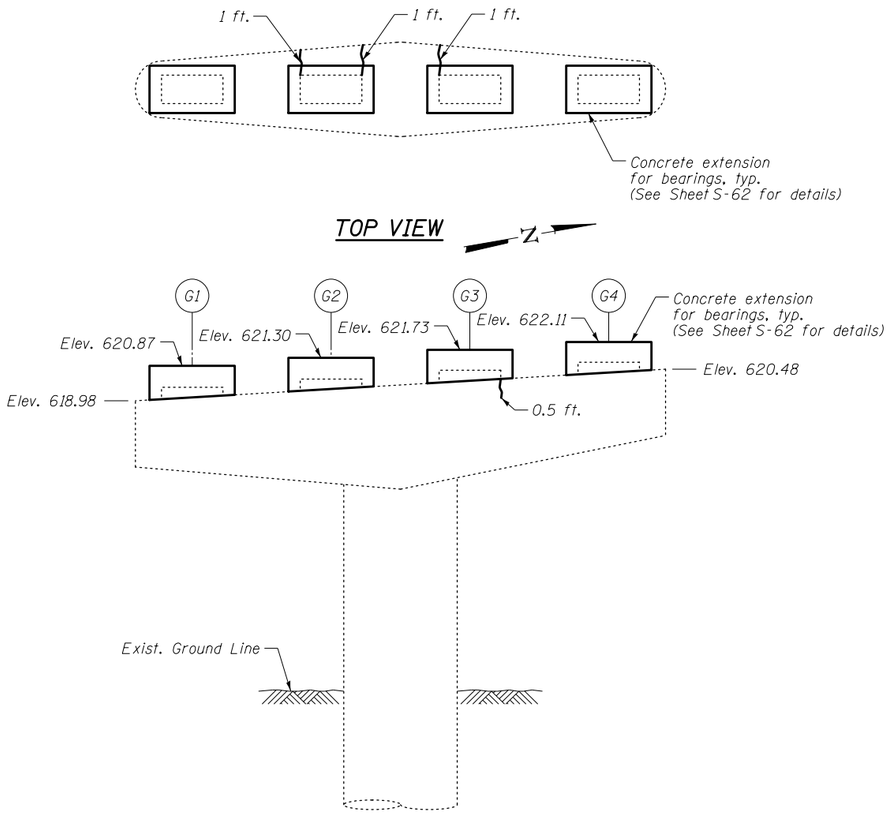

EAST FACE ELEVATION

(Looking West)

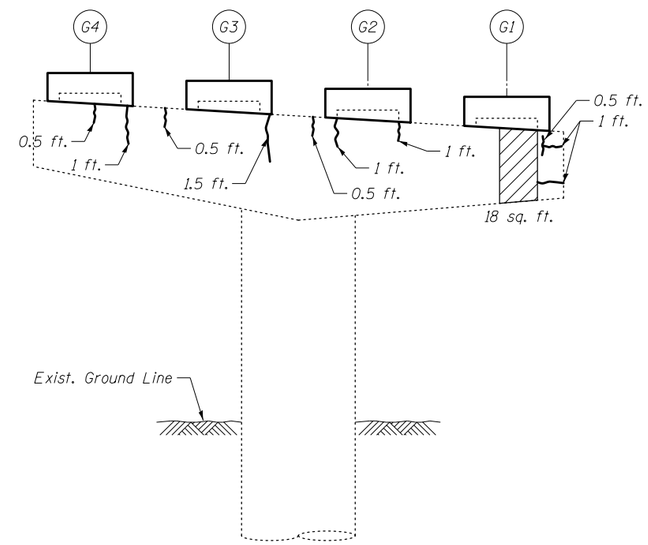

WEST FACE ELEVATION

(Looking East)

NOTES:

1. Actual quantities of repairs shall be approved by the Engineer.

LEGEND

Structural Repair of Concrete
(Depth equal to or less than 5 inches)

Epoxy Crack Injection

BILL OF MATERIAL

ITEM	UNIT	QUANTITY
Structural Repair of Concrete (Depth equal to or less than 5 inches)	Sq. Ft.	18
Epoxy Crack Injection	Foot	12
Jack and Remove Existing Bearings	Each	4

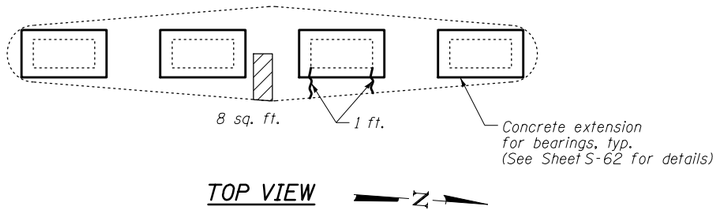

TOP VIEW

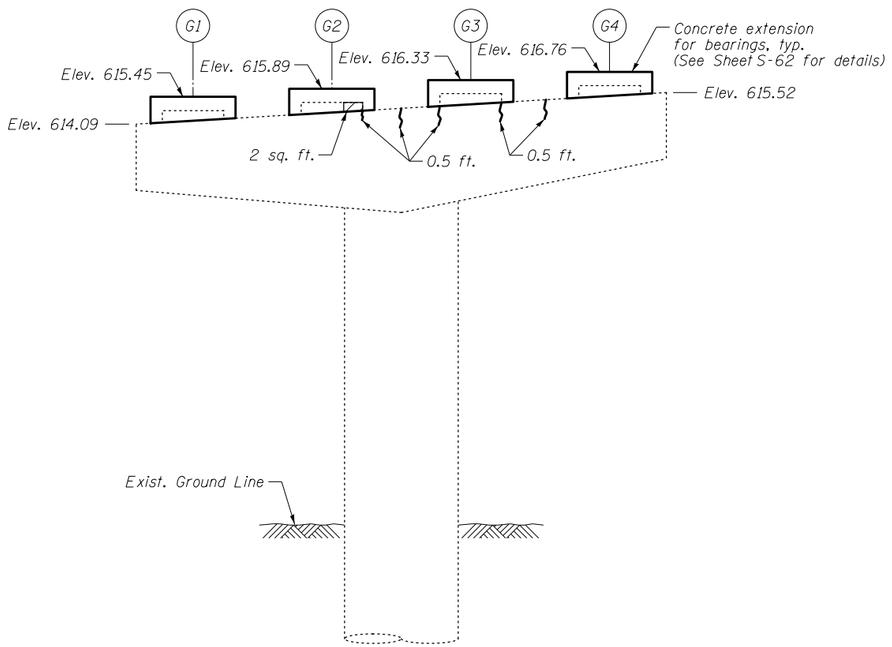

EAST FACE ELEVATION

(Looking West)

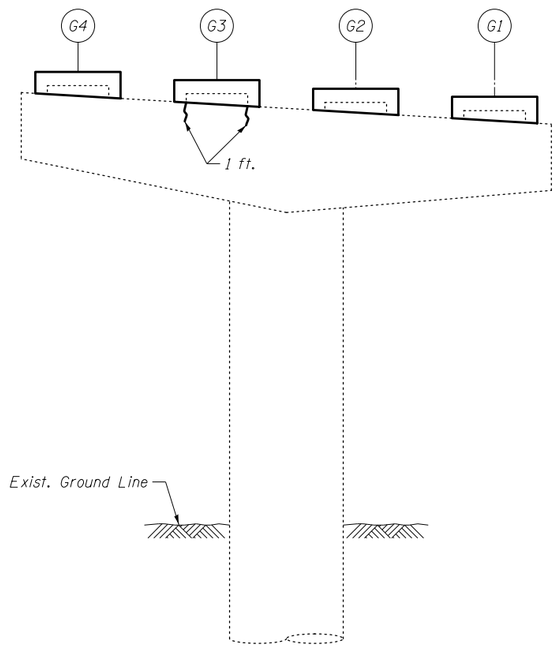

WEST FACE ELEVATION

(Looking East)

NOTES:

1. Actual quantities of repairs shall be approved by the Engineer.

LEGEND

Structural Repair of Concrete
(Depth equal to or less than 5 inches)

Epoxy Crack Injection

BILL OF MATERIAL

ITEM	UNIT	QUANTITY
Structural Repair of Concrete (Depth equal to or less than 5 inches)	Sq. Ft.	10
Epoxy Crack Injection	Foot	6
Jack and Remove Existing Bearings	Each	4

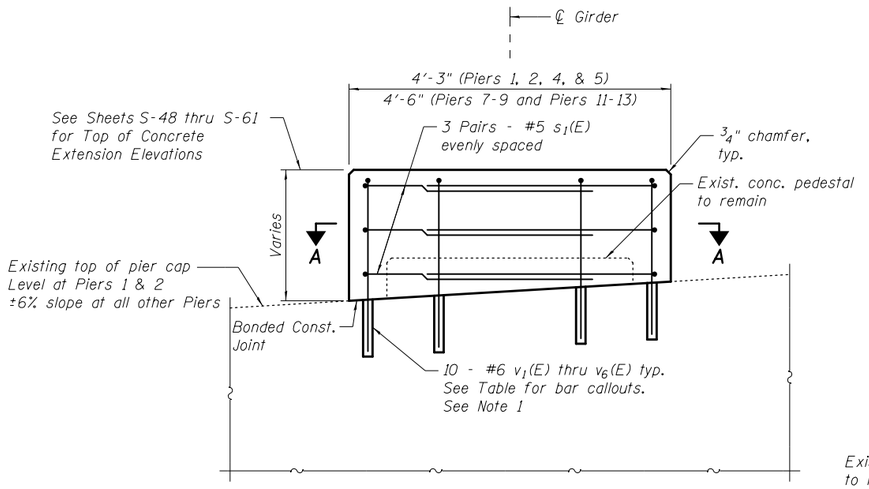

ELEVATION VIEW

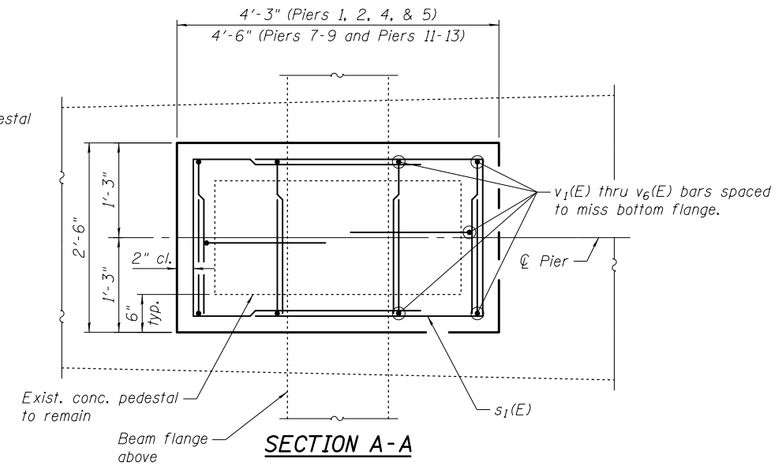

SECTION A-A

TYPICAL CONCRETE EXTENSIONS FOR BEARINGS

Location	Bar
Pier 1, Girders 1 & 2	v3(E)
Girders 3 & 4	v1(E)
Pier 2, Girders 1 - 3	v4(E)
Girder 4	v3(E)
Pier 4, Girders 1 & 2	v3(E)
Girders 3 & 4	v2(E)
Pier 5	v5(E)
Pier 7	v5(E)
Pier 8	v6(E)
Pier 9	v5(E)
Pier 11	v5(E)
Pier 12	v6(E)
Pier 13	v5(E)

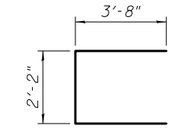

BAR s1(E)

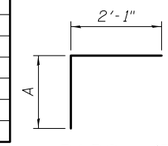

BARS v1(E) thru v6(E)

Bar	A
v1(E)	1'-1"
v2(E)	1'-3"
v3(E)	1'-5"
v4(E)	1'-7"
v5(E)	1'-9"
v6(E)	2'-1"

BILL OF MATERIAL

Bar	No.	Size	Length	Shape
s1(E)	240	#5	9'-6"	
v1(E)	20	#6	3'-2"	
v2(E)	20	#6	3'-4"	
v3(E)	50	#6	3'-6"	
v4(E)	30	#6	3'-8"	
v5(E)	200	#6	3'-10"	
v6(E)	80	#6	4'-2"	
Concrete Structures			Cu. Yd.	19.5
Reinforcement Bars, Epoxy Coated			Pound	4,660

NOTES:

1. Epoxy grout v1(E) thru v6(E) bars in 9" min. drilled holes according to Section 584 of the Standard Specifications.

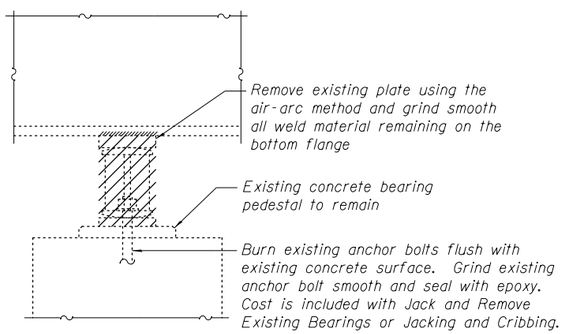

BEARING REMOVAL

(Abut. 1 & Pier 1 thru Pier 6)

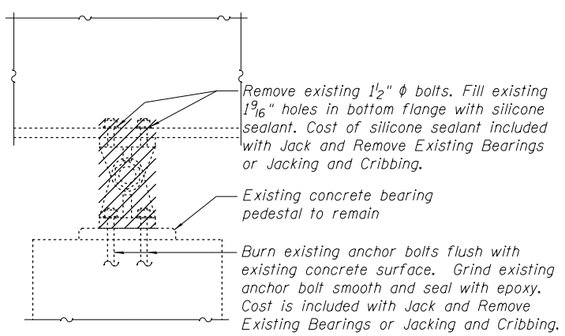

BEARING REMOVAL

(Piers 6 thru 9, Piers 11 thru 13, & Abut. 2)

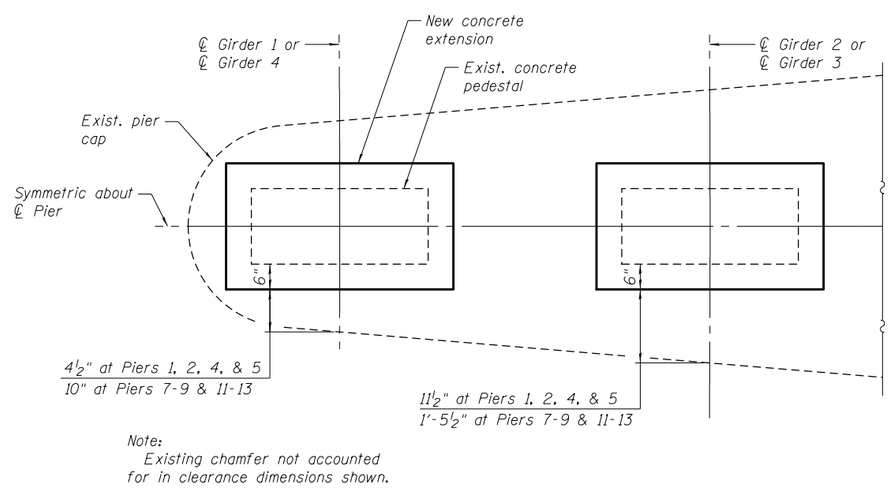

Note:
Existing chamfer not accounted for in clearance dimensions shown.

JACKING CLEARANCE PLAN VIEW AT PIERS

JACKING PROCEDURE

1. Jacking of existing beams shall be done after the deck in each unit is removed.

2. The Contractor shall submit for approval by the Engineer details and calculations for jacking existing beams and removing and installing bearings prior to commencing any related work. Below shows the minimum jack capacity required for each bearing.

Location	Beam DL Reaction (k)	Min. Jack Capacity (k)
Abut 1, Piers 3 & 6	7	15
Piers 1, 2, 4, 5 & 9, Abut 2	21	35
Pier 11	39	60
Piers 7, 8, 12 & 13	53	80

3. Jacking may be performed directly from the bearing seat under the girders. Each proposed concrete extension may be poured in two stages to permit jacking from the bearing seat, subject to the approval of the Engineer. See Jacking Clearance Plan View at Piers.

4. There shall be at least one jack per bearing and the jack shall be placed directly under the girder. The jacking operation shall follow procedures outlined in the special provisions "Jack and Remove Existing Bearings" and "Jacking and Cribbing". The girders shall be blocked in position until after the completion of the installation of new bearings.

5. The new concrete extensions and bearings shall be in place and the jacks shall be removed before the new concrete deck in each unit is poured.

S:\1072\05_CADD\Structural\SN 016-2437\CADD Sheets\016-2437-S62J12-062-B-gPedestals.dgn 2:26:27 PM 11/08/2012

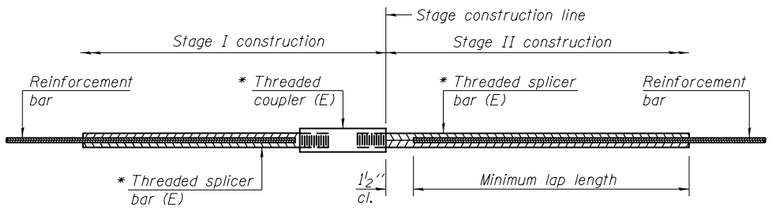

STANDARD BAR SPLICER ASSEMBLY

Minimum Lap Lengths						
Bar size to be spliced	Table 1	Table 2	Table 3	Table 4	Table 5	Table 6
3, 4	1'-5"	1'-11"	2'-1"	2'-4"	2'-7"	2'-11"
5	1'-9"	2'-5"	2'-7"	2'-11"	3'-3"	3'-8"
6	2'-1"	2'-11"	3'-1"	3'-6"	3'-10"	4'-5"
7	2'-9"	3'-10"	4'-2"	4'-8"	5'-2"	5'-10"
8	3'-8"	5'-1"	5'-5"	6'-2"	6'-9"	7'-8"
9	4'-7"	6'-5"	6'-10"	7'-9"	8'-7"	9'-8"

Table 1: Black bar, 0.8 Class C
Table 2: Black bar, Top bar lap, 0.8 Class C
Table 3: Epoxy bar, 0.8 Class C
Table 4: Epoxy bar, Top bar lap, 0.8 Class C
Table 5: Epoxy bar, Class C
Table 6: Epoxy bar, Top bar top, Class C

Threaded splicer bar length = min. lap length + 1½" + thread length

* Epoxy not required on Bar Splicer Assembly components used in conjunction with black bars.

Location	Bar size	No. assemblies required	Table for minimum lap length

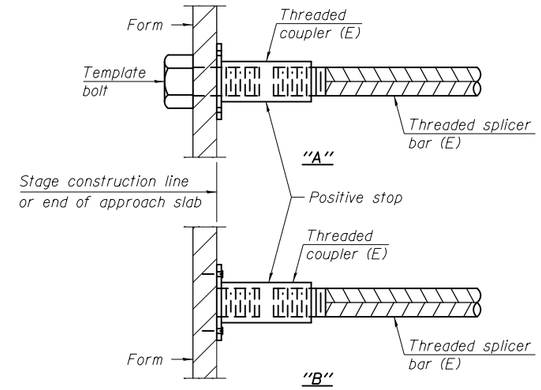

INSTALLATION AND SETTING METHODS

"A" : Set bar splicer assembly by means of a template bolt.
"B" : Set bar splicer assembly by nailing to wood forms or cementing to steel forms.
(E) : Indicates epoxy coating.

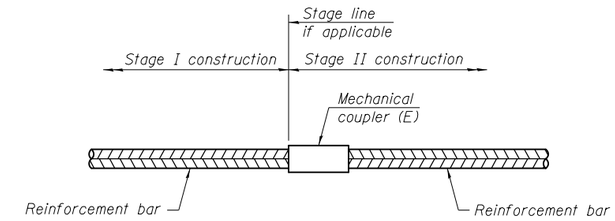

STANDARD MECHANICAL SPLICER

Location	Bar size	No. assemblies required
Pier 3	#14	16
Pier 6	#14	16

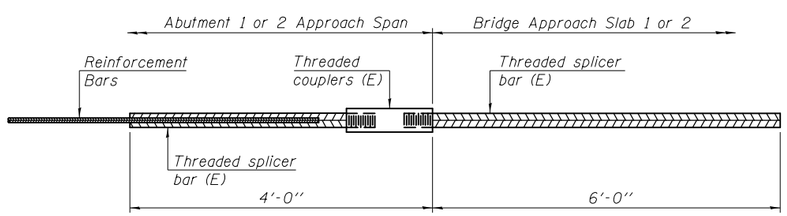

BAR SPLICER ASSEMBLY FOR #5 BAR ON ABUTMENT APPROACH SPANS

No. required = 40

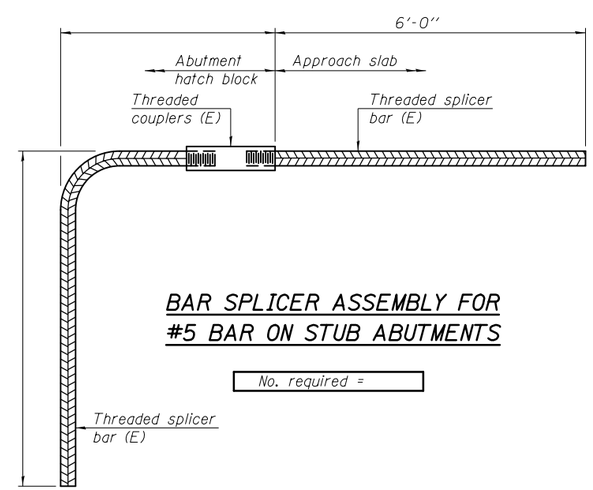

BAR SPLICER ASSEMBLY FOR #5 BAR ON STUB ABUTMENTS

No. required =

NOTES

Splicer bars shall be deformed with threaded ends and have a minimum 60 ksi yield strength.

All reinforcement shall be lapped and tied to the splicer bars.

Bar splicer assemblies shall be epoxy coated according to the requirements for reinforcement bars. See Section 508 of the Standard Specifications.

See approved list of bar splicer assemblies and mechanical splicers for alternatives.

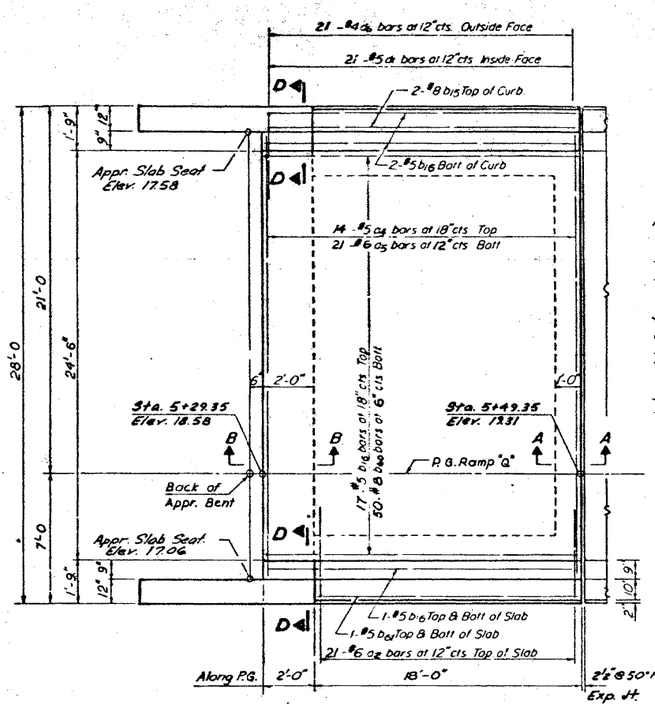

PLAN

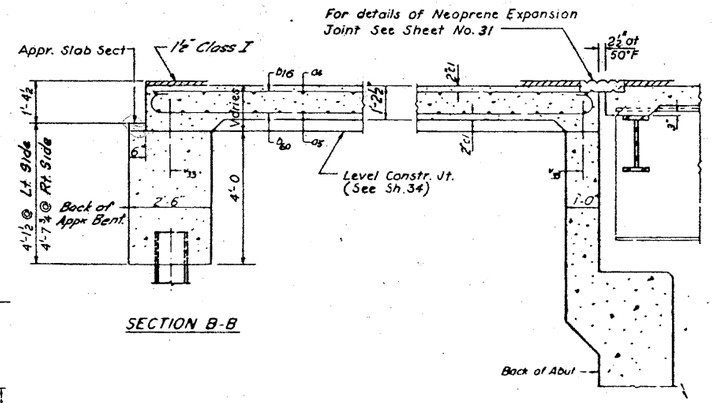

SECTION B-B

SECTION A-A

BILL OF MATERIAL				
BAR	NO	SIZE	LENGTH	SHAPE
a2	42	#5	4'-0	
a4	14	#5	26'-0"	
a5	21	#6	24'-3"	
b15	4	#8	19'-8"	
b16	25	#5	19'-8"	
b60	50	#8	21'-6	
b61	4	#5	17'-8	
d1	42	#5	3'-7	
d6	42	#5	6'-1	

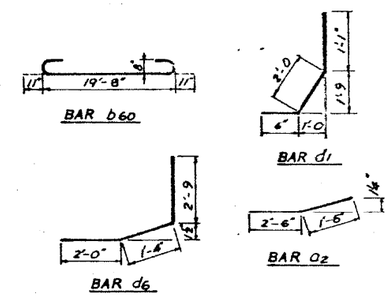

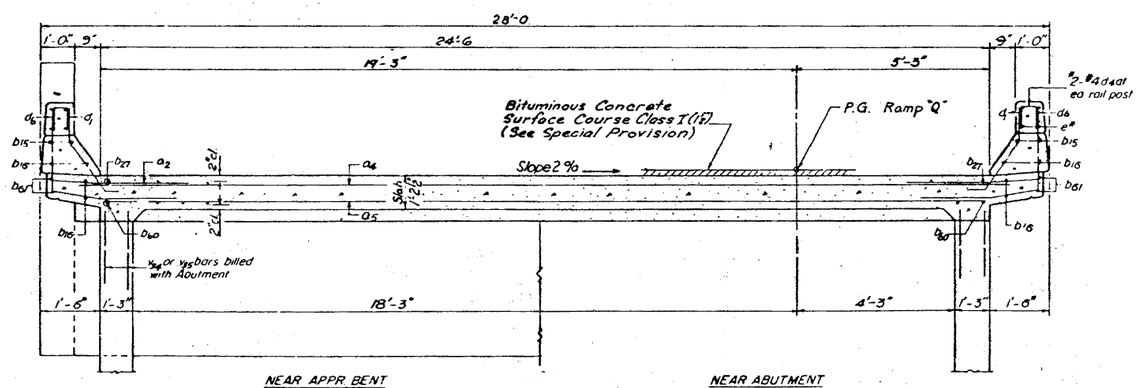

CROSS SECTION

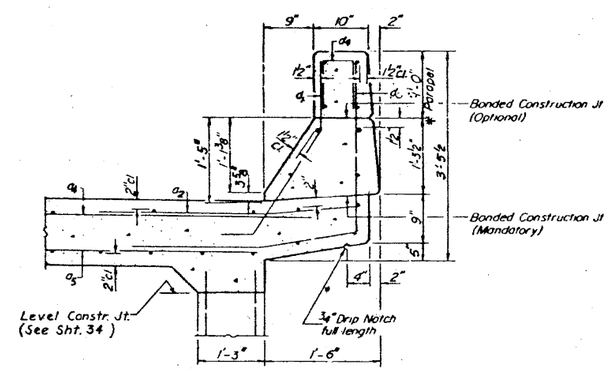

CURB SECTION

NOTES

For Parapet Plan and Details See Sht. No. 24

*Parapet Reinforcement and Class X Concrete are billed on Sht. No. 24

For Continuation of Slab See Sht. No. 18

For Section D-D See Sht. No. 34

For Deck Surfacing Details See Sht. No. 25.

ESTIMATED QUANTITIES ABUT. NO. 1		
ITEM	UNIT	TOTAL
REINFORCEMENT BARS	LB.	5410
CLASS X CONCRETE	C.Y.	30.1
PROTECTIVE COAT	S.Y.	15
BITUMINOUS CONCRETE SURFACE COURSE CLASS I	TON	4.9
COAL TAR INTERLAYER PROTECTIVE COAT	S.Y.	55

REVISIONS		
DATE	BY	DESCRIPTION

DEPARTMENT OF HIGHWAYS
COOK COUNTY, ILLINOIS

GEORGE W. DUNNE
PRESIDENT BOARD OF COMMISSIONERS

SUPERINTENDENT OF HIGHWAYS

SLAB PLAN AT ABUTMENT NO. 1

STONY ISLAND CONNECTOR TO F.A.I. 94
RAMP Q STRUCTURE

KINDERLE, BENDER, STONE & ASSOCIATES INC.
CONSULTING ENGINEERS
CHICAGO, ILLINOIS

PROJECT EEU 2460 (7)
SCALE
APPROVED
APPROVED
CHIEF ENGINEER

F.A. Route No.	COUNTY HWY. Route No.	Sheet No.	Total Sheets	Drawing No.
122	174A	17	103	

BOWMAN, BARRETT & ASSOCIATES INC.
CONSULTING ENGINEERS
Chicago, Illinois
312.228.0100
www.bbandainc.com

USER NAME =	DESIGNED -	REVISED -
	CHECKED - BAK	REVISED -
PLOT SCALE =	DRAWN -	REVISED -
PLOT DATE = 11/08/2012	CHECKED -	REVISED -

STATE OF ILLINOIS
DEPARTMENT OF TRANSPORTATION

EXISTING PLANS (FOR INFORMATION ONLY)
STRUCTURE NO. 016-2437
SHEET NO. S-64 OF S-83 SHEETS

F.A.I. RTE.	SECTION	COUNTY	TOTAL SHEETS	SHEET NO.
94	2012-060-BR	COOK	285	227
		CONTRACT NO. 60V61		
	ILLINOIS	FED. AID PROJECT		

S:\1072\05_CADD\Structural\SN 0162437\CADD Sheets\0162437-68J12-064-FY01.dgn 12/7/2012 2:26:28 PM

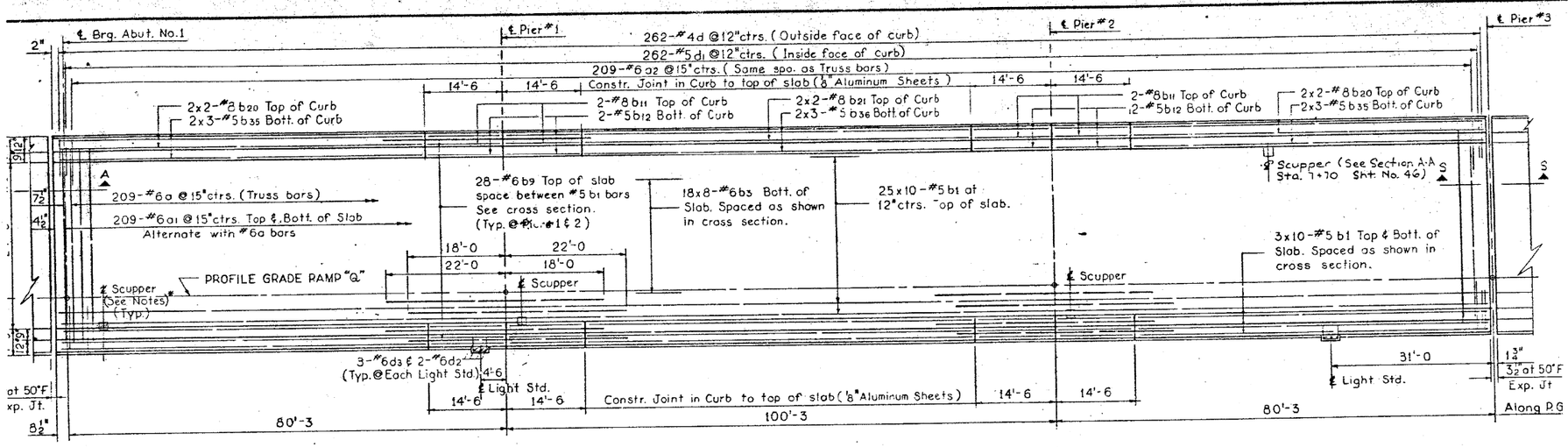

PLAN SPAN 1 THRU 3

BILL OF MATERIAL-SPAN 1-3				
BAR	NO.	SIZE	LENGTH	SHAPE
a	209	#6	27'-4	
a1	418	#6	26'-0	
a2	418	#6	4'-0	
b1	370	#5	27'-3	
b9	56	#6	40'-0	
b3	144	#6	34'-0	
b11	16	#8	14'-2	
b12	16	#5	14'-2	
b20	16	#8	34'-0	
b35	24	#5	22'-9	
b21	8	#8	36'-9	
b36	12	#5	24'-9	
d	524	#4	4'-6	
d1	524	#5	3'-7	
d2	4	#6	9'-3	
d3	6	#6	3'-10	
s	108	#6	6'-0	

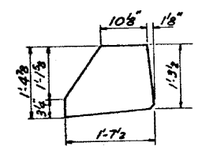

ALUMINUM SHEET DETAIL

NOTE: Aluminum sheet shall be painted with 3-coats of epoxy protective coating, consisting of Sika Colma Sol epoxy coating, Gray in color or equal. Cost incidental.

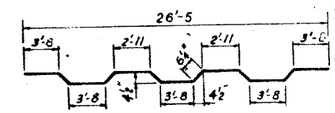

BAR a

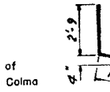

BAR d

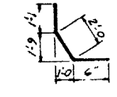

BAR d1

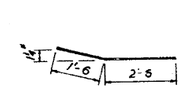

BAR a2

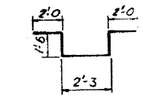

BAR d2

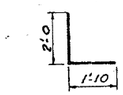

BAR d3

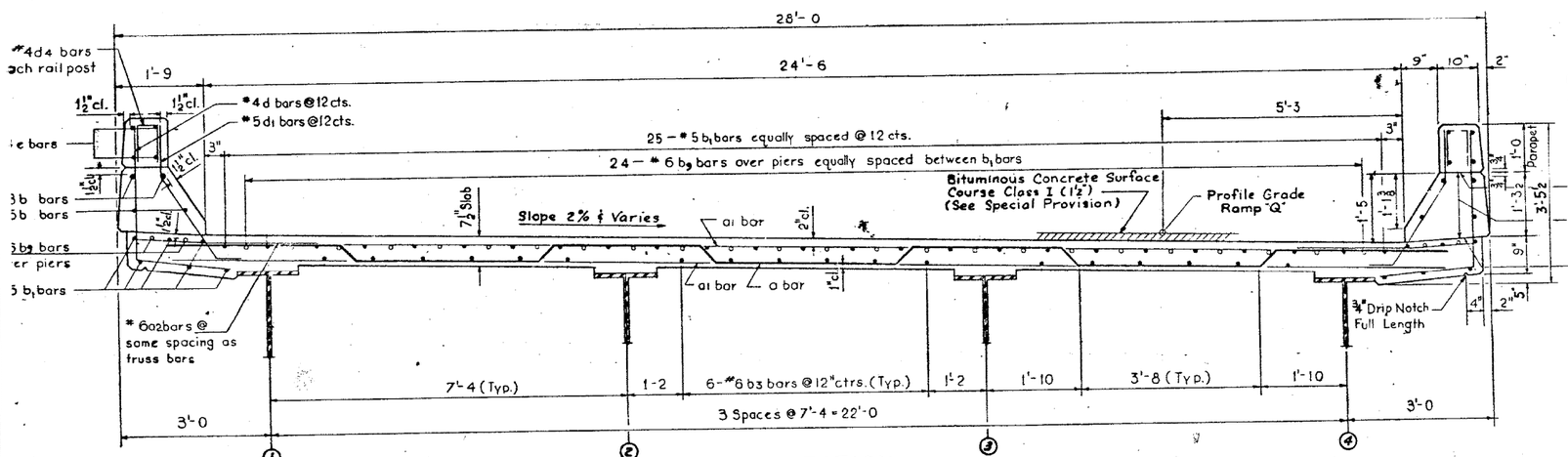

CROSS SECTION

NOTE

Cost of Aluminum Sheets shall be incidental to Class X Concrete.
Parapet Reinforcement and Class X Concrete are billed on Sheet No. 22

For Continuation of Slab See Sheet No. 19
For Bottom of Slab Elevations See Sheet No. 12
For Parapet Plan and Details See Sheet No. 22
For Section A-A See Sheet No. 17
For Section S-S See Sheet No. 25
For Light Std. and miscellaneous Slab Details See Sheet No. 25
* For Scupper Details, Location and Additional Slab Reinforcement See Sheet No. 46
Bars Marked thus 18x8-#6ctrs indicate 18 lines of bars with 8 lengths per line.
For Deck Drain Details see sheet No. 25
For Deck Surfacing Detail see sheet No. 25

ESTIMATED QUANTITIES-SPAN 1-3		
ITEM	UNIT	TOTAL
REINFORCEMENT BARS	LB.	57,291
CLASS X CONCRETE	C.Y.	225.7
PROTECTIVE COAT	S.Y.	198
BITUMINOUS CONCRETE SURFACE COURSE CLASS I	TON	63.9
COAL TAR INTERLAYER PROTECTIVE COAT	S.Y.	718

REVISIONS		
DATE	BY	DESCRIPTION

DEPARTMENT OF HIGHWAYS
COOK COUNTY, ILLINOIS

GEORGE W DUNNE, PRESIDENT BOARD OF COMMISSIONERS
SUPERINTENDENT OF HIGHWAYS

SLAB PLAN SPANS 1 THRU 3

STONY ISLAND CONNECTOR TO FAI 94
RAMP Q STRUCTURE

KNOERLE, BENDER, STONE & ASSOCIATES INC
CONSULTING ENGINEERS
CHICAGO, ILLINOIS

PROJECT EBU 246 (77)
SCALE
APPROVED

APPROVED 4-11-72
CHIEF ENGINEER

F.A. Route No	COUNTY HWY. Route No	Sheet No	Total Sheets	Drawing No
122	174 A	18	109	

BOWMAN, BARRETT & ASSOCIATES INC.
CONSULTING ENGINEERS
Chicago, Illinois
312.228.0100
www.bbandainc.com

USER NAME =	DESIGNED -	REVISED -
	CHECKED - BAK	REVISED -
PLOT SCALE =	DRAWN -	REVISED -
PLOT DATE = 11/08/2012	CHECKED -	REVISED -

STATE OF ILLINOIS
DEPARTMENT OF TRANSPORTATION

EXISTING PLANS (FOR INFORMATION ONLY)
STRUCTURE NO. 016-2437
SHEET NO. S-65 OF S-83 SHEETS

F.A.I. RTE.	SECTION	COUNTY	TOTAL SHEETS	SHEET NO.
94	2012-060-BR	COOK	285	228

CONTRACT NO. 60V61
ILLINOIS FED. AID PROJECT

S:\1072\05_CADD\Structural\SN 0162437\CADD Sheets\0162437-6B12-065-FY02.dgn 12/7/2012 2:26:33 PM

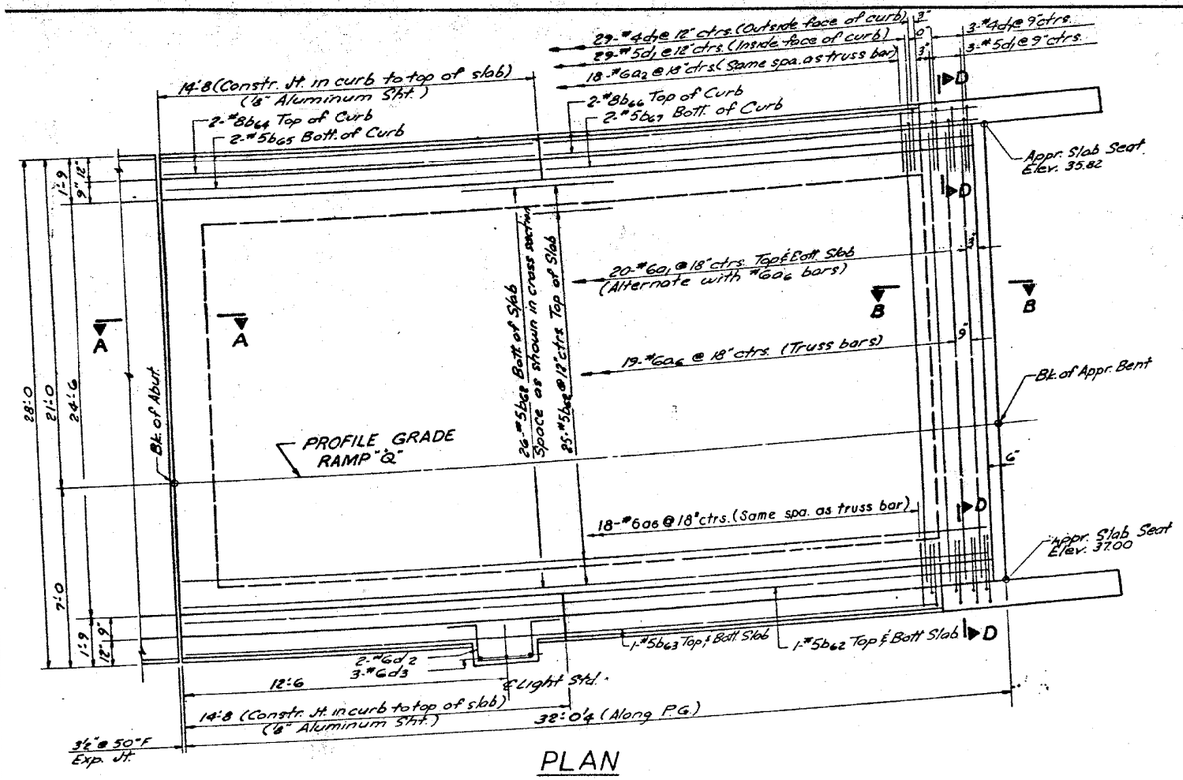

PLAN

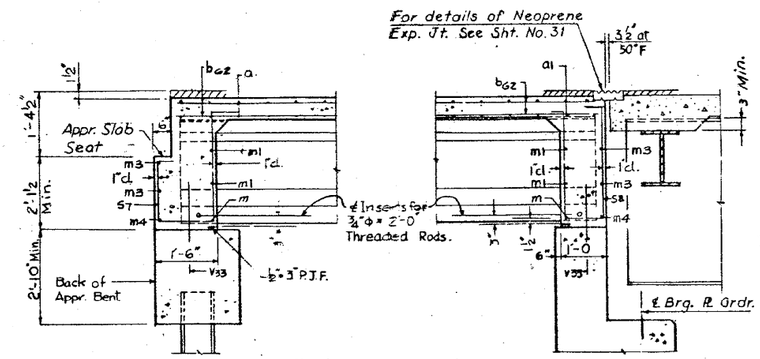

SECTION B-B

SECTION A-A

BILL OF MATERIAL				
BAR	NO.	SIZE	LENGTH	SHAPE
a_7	19	#6	27'-8	
a_1	40	#6	26'-0	
a_2	18	#6	4'-0	
a_6	18	#6	4'-0	
b_{62}	55	#5	31'-2	
b_{63}	4	#5	29'-2	
b_{64}	4	#8	14'-4	
b_{65}	4	#5	14'-4	
b_{66}	4	#8	17'-0	
b_{67}	4	#5	16'-2	
m	8	#5	4'-0	
m_1	24	#4	5'-0	
m_2	8	#4	4'-0	
m_3	4	#4	26'-0	
m_4	2	#5	26'-0	
s_7	16	#4	7'-6	
s_8	16	#4	8'-4	
s_9	16	#4	7'-0	
d_1	64	#5	3'-7	
d_2	2	#6	9'-3	
d_7	64	#4	5'-0	

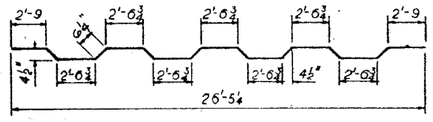

BAR a

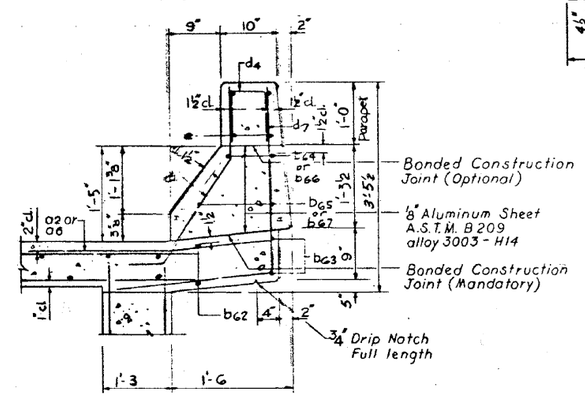

CURB SECTION

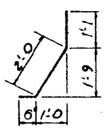

BAR d_1

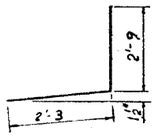

BAR d_7

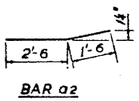

BAR a_2

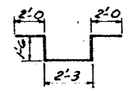

BAR d_2

NOTE

For Parapet Plan and Details see Sht. No. 24
For placement and details of m and s bars see Sht. No. 33
For Bottom of Slab Elevations see Sht. No. 16
For Light Std Detail see Sht. No. 25
For Pile Encasement Detail see Sht. No. 47
For Section D-D see Sht. No. 35
For Aluminum Sheet Detail see Sht. No. 18
For Deck Drain Details See Sht. No. 25.

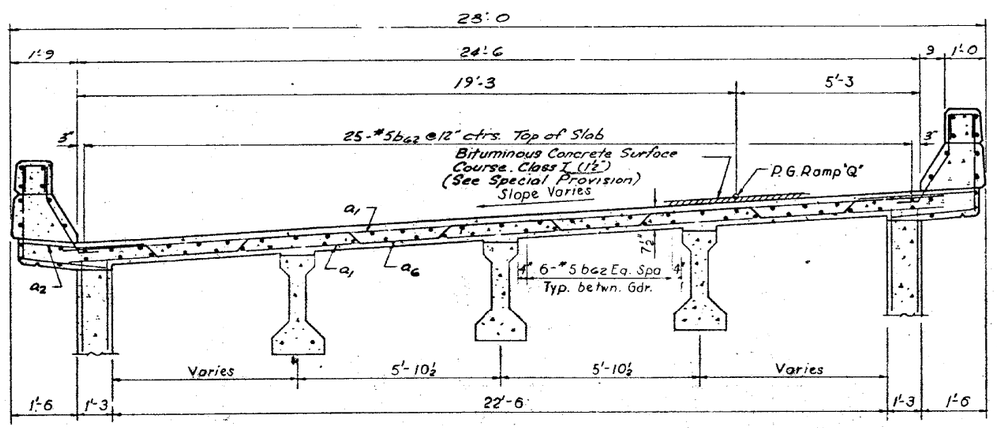

CROSS SECTION

NOTE

* Parapet Reinforcement and Class X Concrete are billed on Sht. No. 24
Cost of Aluminum Sheets shall be incidental to Class X Concrete.

ESTIMATED QUANTITIES-ABUT. 2		
ITEM	UNIT	TOTAL
REINFORCEMENT BARS	LB.	5824
CLASS X CONCRETE	C.Y.	35.7
PROTECTIVE COAT	S.Y.	43
BITUMINOUS CONCRETE SURFACE COURSE CLASS I	TON	2.7
COAL TAR INTERLAYER PROTECTIVE COAT	S.Y.	87

REVISIONS		
DATE	BY	DESCRIPTION

DEPARTMENT OF HIGHWAYS
COOK COUNTY, ILLINOIS
GEORGE W. DUNNE
PRESIDENT, BOARD OF COMMISSIONERS — SUPERINTENDENT OF HIGHWAYS

SLAB PLAN AT ABUTMENT NO. 2

STONY ISLAND CONNECTOR TO FAI 94
RAMP Q STRUCTURE

KNOERLE, BENDER, STONE & ASSOCIATES INC.
CONSULTING ENGINEERS
CHICAGO, ILLINOIS

PROJECT EBU 246 (77)
SCALE
APPROVED H. O. Bender
APPROVED 4-11-72

F.A. Route No.	County Hwy Route No.	Sheet No.	Total Sheets	Drawing No.
122	174A	21	109	

BOWMAN, BARRETT & ASSOCIATES INC.
CONSULTING ENGINEERS
Chicago, Illinois
312.228.0100
www.bbandainc.com

USER NAME =	DESIGNED -	REVISED -
	CHECKED - BAK	REVISED -
PLOT SCALE =	DRAWN -	REVISED -
PLOT DATE = 11/08/2012	CHECKED -	REVISED -

STATE OF ILLINOIS
DEPARTMENT OF TRANSPORTATION

EXISTING PLANS (FOR INFORMATION ONLY)
STRUCTURE NO. 016-2437
SHEET NO. S-66 OF S-83 SHEETS

F.A.I. RTE.	SECTION	COUNTY	TOTAL SHEETS	SHEET NO.
94	2012-060-BR	COOK	285	229

CONTRACT NO. 60V61
ILLINOIS FED. AID PROJECT

S:\1072\05_CADD\Structural\SN 0162437\CADD Sheets\0162437-6B12-066-FY03.dgn 12/7/2012 2:26:37 PM

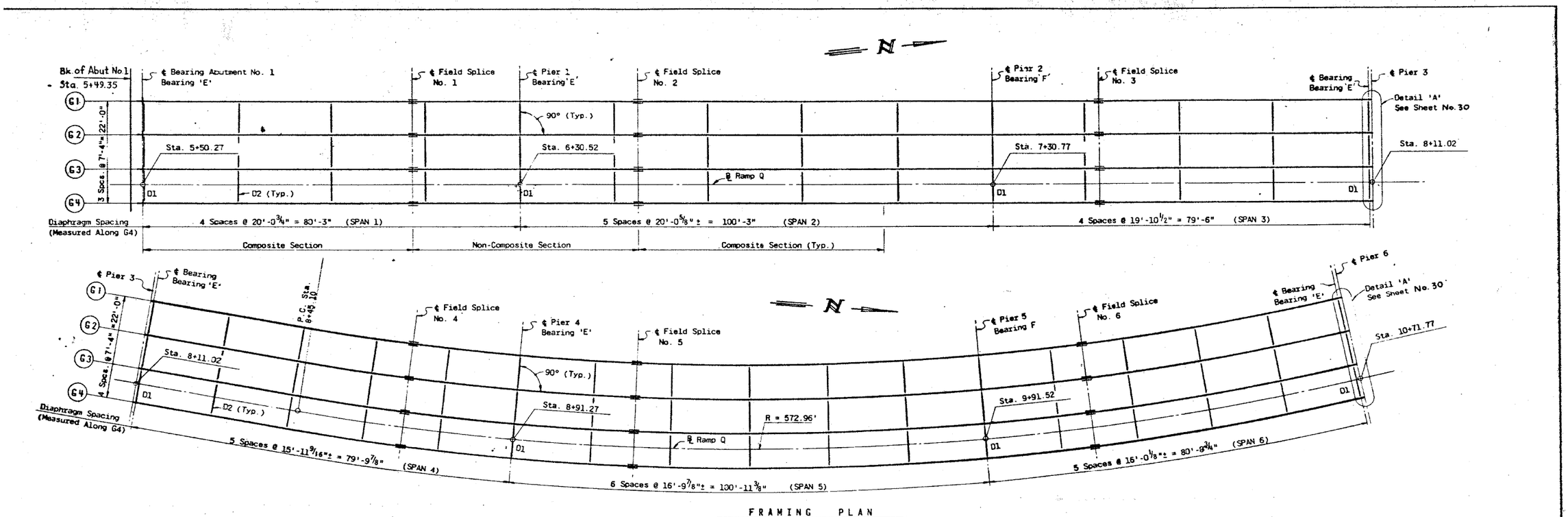

FRAMING PLAN

SCALE: 1" = 10'-0"

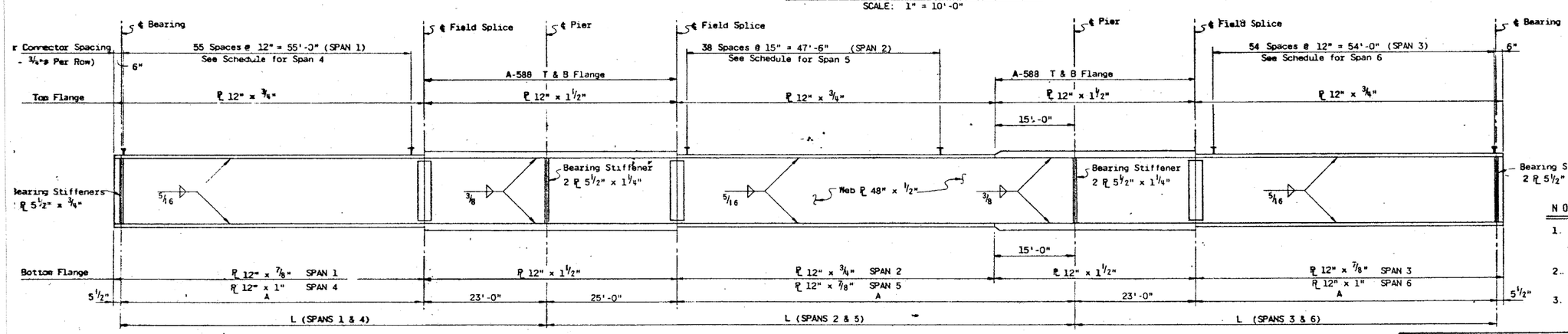

GIRDER ELEVATION

NOT TO SCALE

NOTES:

1. For details of Diaphragms, Cross Frames and Field Splices, See Sheet 30
2. For details of Bearing and Joint Types, See Sheet 31
3. For additional notes, See Sheet 28

GIRDER SCHEDULE

GIRDER	SPAN 1		SPAN 2		SPAN 3		SPAN 4		SPAN 5		SPAN 6		SPANS 4-6*	SHEAR STUD SPACING		
NO	L	A	L	A	L	A	L	A	L	A	L	A	RADIUS	SPAN 4	SPAN 5	SPAN 6
1	80'-3"	57'-3"	100'-3"	75'-3"	79'-6"	56'-6"	78'-0 5/8"	55'-0 5/8"	97'-1 3/16"	72'-1 3/16"	76'-11 3/4"	53'-11 3/4"	554.96'	70 Spcs. @ 9"	60 Spcs. @ 9"	69 Spcs. @ 9"
2	80'-3"	57'-3"	100'-3"	75'-3"	79'-6"	56'-6"	78'-7 11/16"	55'-7 11/16"	98'-4 5/8"	73'-4 5/8"	78'-0 1/16"	55'-0 1/16"	562.29'	70 Spcs. @ 9"	60 Spcs. @ 9"	69 Spcs. @ 9"
3	80'-3"	57'-3"	100'-3"	75'-3"	79'-6"	56'-6"	79'-2 3/4"	56'-2 3/4"	99'-8"	74'-8"	79'-0 3/8"	56'-0 3/8"	569.63'	72 Spcs. @ 9"	63 Spcs. @ 9"	72 Spcs. @ 9"
4	80'-3"	57'-3"	100'-3"	75'-3"	79'-6"	56'-6"	79'-9 7/8"	56'-9 7/8"	100'-11 3/8"	75'-11 3/8"	80'-0 3/4"	57'-0 3/4"	576.96'	72 Spcs. @ 9"	63 Spcs. @ 9"	72 Spcs. @ 9"

* See Framing Plan

REVISIONS		
DATE	BY	DESCRIPTION

DEPARTMENT OF HIGHWAYS
COOK COUNTY, ILLINOIS

GEORGE W. DUNNE
PRESIDENT BOARD OF COMMISSIONERS

SUPERINTENDENT OF HIGHWAYS

STR. STEEL FRAMING PLAN & DETAILS

STONY ISLAND CONNECTOR TO FAI 94
RAMP Q STRUCTURE

KNOERLE, BENDER, STONE & ASSOCIATES INC
CONSULTING ENGINEERS
CHICAGO, ILLINOIS

PROJECT EBU 246 (7)
SCALE
APPROVED H. A. Johnson

APPROVED 4-11-72
CHIEF ENGINEER

F.A. Route No.	COUNTY HWY. Route No.	Sheet No.	Total Sheets	Drawing No.
122	174A	27	109	

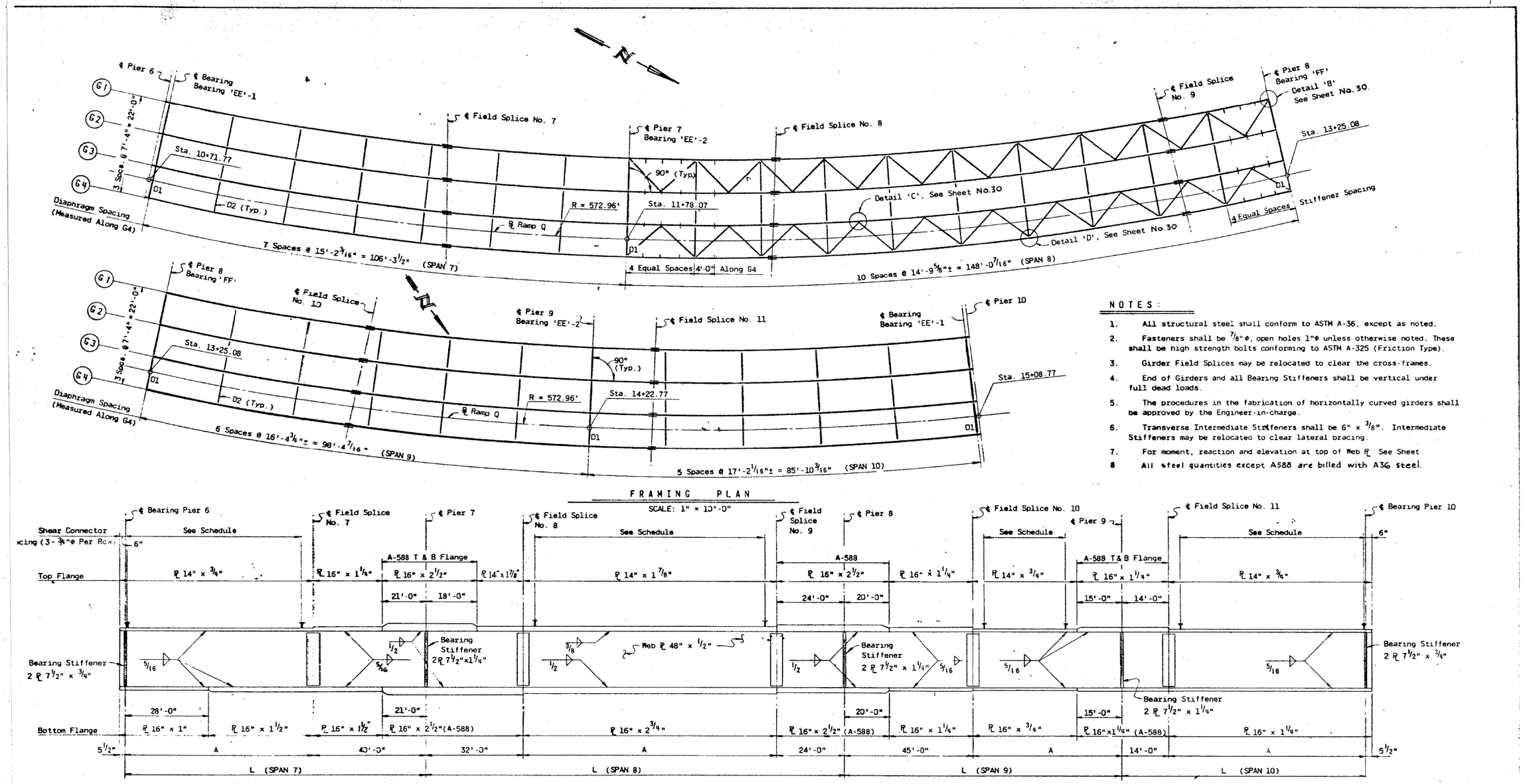

FRAMING PLAN

SCALE: 1" = 10'-0"

NOTES:

1. All structural steel shall conform to ASTM A-36, except as noted.
2. Fasteners shall be 7/8"φ, open holes 1"φ unless otherwise noted. These shall be high strength bolts conforming to ASTM A-325 (Friction Type).
3. Girder Field Splices may be relocated to clear the cross-frames.
4. End of Girders and all Bearing Stiffeners shall be vertical under full dead loads.
5. The procedures in the fabrication of horizontally curved girders shall be approved by the Engineer-in-charge.
6. Transverse Intermediate Stiffeners shall be 6" x 3/8". Intermediate Stiffeners may be relocated to clear lateral bracing.
7. For moment, reaction and elevation at top of Web ℄ See Sheet
8. All steel quantities except A588 are billed with A36 steel.

GIRDER ELEVATION

NOT TO SCALE

GIRDER SCHEDULE

GIRDER NO	SPAN 7 L	SPAN 7 A	SPAN 8 L	SPAN 8 A	SPAN 9 L	SPAN 9 A	SPAN 10 L	SPAN 10 A	RADIUS	SHEAR STUD SPACING SPAN 7	SPAN 8	SPAN 9	SPAN 10
1	102'-2 1/2"	62'-2 1/2"	142'-4 11/16"	86'-4 11/16"	94'-7 7/16"	49'-7 7/16"	82'-6 9/16"	68'-6 9/16"	554.96'	81 Spcs. @ 9"	111 Spcs. @9"	44 Spcs. @9"	88 Spcs. @9"
2	103'-6 7/8"	63'-6 7/8"	144'-3 5/16"	88'-3 5/16"	95'-10 7/16"	50'-10 7/16"	83'-7 13/16"	69'-7 13/16"	562.29'	82 Spcs. @ 9"	113 Spcs. @9"	46 Spcs. @9"	90 Spcs. @9"
3	104'-11 3/16"	64'-11 3/16"	146'-1 7/8"	90'-1 7/8"	97'-1 7/16"	52'-1 7/16"	84'-9"	70'-9"	569.63'	84 Spcs. @ 9"	116 Spcs. @9"	47 Spcs. @9"	92 Spcs. @9"
4	106'-3 1/2"	66'-3 1/2"	148'-0 7/16"	92'-0 7/16"	98'-4 7/16"	53'-4 7/16"	85'-10 3/16"	71'-10 3/16"	576.96'	86 Spcs. @ 9"	118 Spcs. @9"	49 Spcs. @9"	93 Spcs. @9"

NOTES:

1. For Details of Diaphragms, Cross-Frames and Field Splice. See Sheet 30
2. For Details of Bearing and Joint Types, See Sheet 31
3. For Location and Spacings of Transverse Stiffeners, See Framing Plan, 30

REVISIONS		
DATE	BY	DESCRIPTION

DEPARTMENT OF HIGHWAYS
COOK COUNTY, ILLINOIS

GEORGE W DUNNE
PRESIDENT BOARD OF COMMISSIONERS — SUPERINTENDENT OF HIGHWAYS

STR. STEEL FRAMING PLAN & DETAILS

STONY ISLAND CONNECTOR TO FAI 94
RAMP Q STRUCTURE

KNOERLE, BENDER, STONE & ASSOCIATES INC.
CONSULTING ENGINEERS
CHICAGO, ILLINOIS

PROJECT EBU 246(77)
SCALE
APPROVED

APPROVED 4-11-72

F.A. Route No.	County Hwy Route No.	Sheet No.	Total Sheets	Drawing No.
122	174A	28	109	

BOWMAN, BARRETT & ASSOCIATES INC.
CONSULTING ENGINEERS
Chicago, Illinois
312.228.0100
www.bbandainc.com

USER NAME =	DESIGNED -	REVISED -
	CHECKED - BAK	REVISED -
PLOT SCALE =	DRAWN -	REVISED -
PLOT DATE = 11/08/2012	CHECKED -	REVISED -

STATE OF ILLINOIS
DEPARTMENT OF TRANSPORTATION

EXISTING PLANS (FOR INFORMATION ONLY)
STRUCTURE NO. 016-2437
SHEET NO. S-68 OF S-83 SHEETS

F.A.I. RTE.	SECTION	COUNTY	TOTAL SHEETS	SHEET NO.
94	2012-060-BR	COOK	285	231

CONTRACT NO. 60V61

ILLINOIS FED. AID PROJECT

S:\1072\05_CADD\Structural\SN 0162437\CADD Sheets\0162437-68J12-068-FV05.dgn 12/7/2012 2:26:44 PM

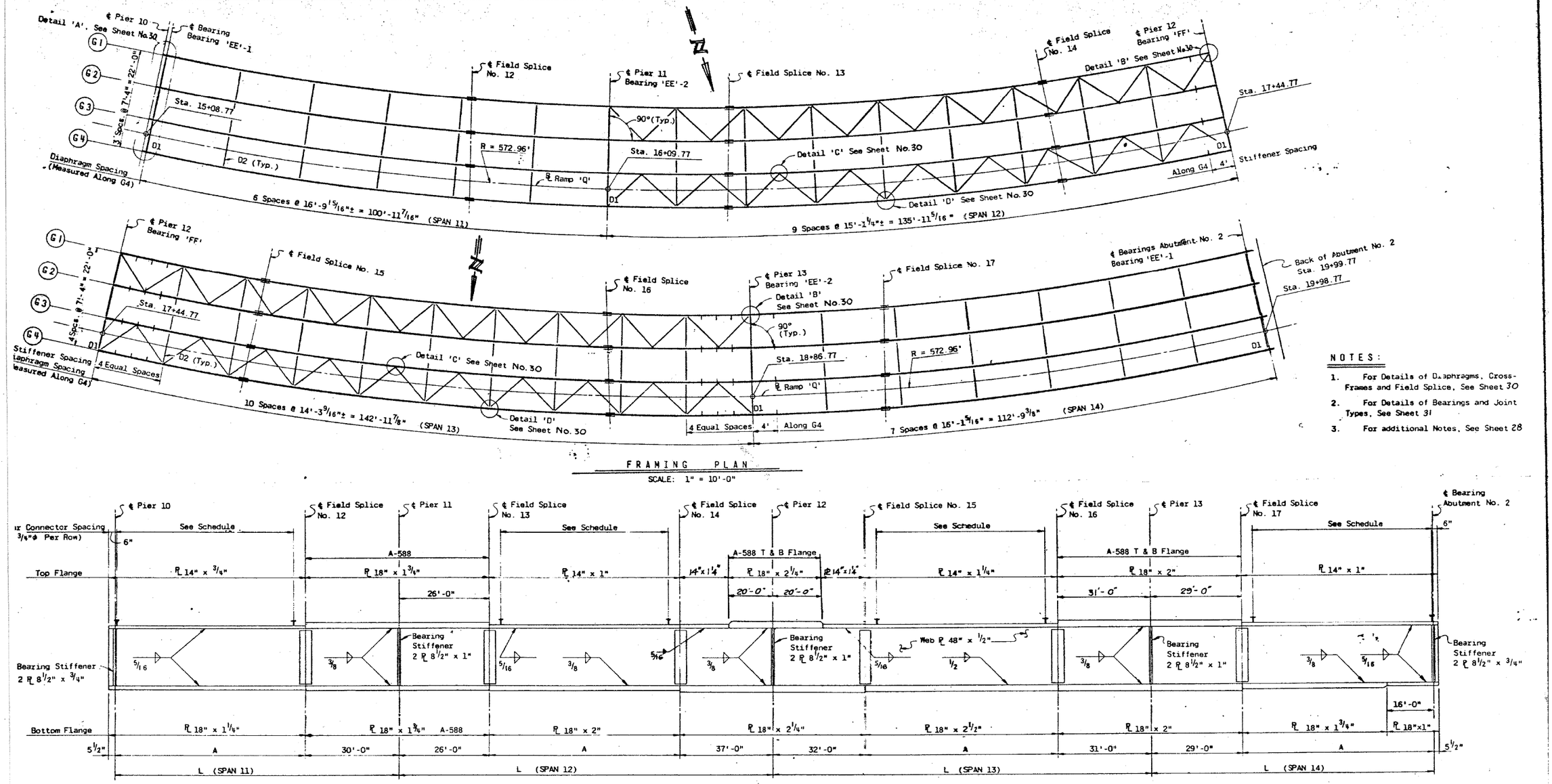

FRAMING PLAN

SCALE: 1" = 10'-0"

NOTES:

1. For Details of Diaphragms, Cross-Frames and Field Splice, See Sheet 30
2. For Details of Bearings and Joint Types, See Sheet 31
3. For additional Notes, See Sheet 28

GIRDER ELEVATION

NOT TO SCALE

GIRDER SCHEDULE

GIRDER NO.	SPAN 11 L	SPAN 11 A	SPAN 12 L	SPAN 12 A	SPAN 13 L	SPAN 13 A	SPAN 14 L	SPAN 14 A	RADIUS	SHEAR STUD SPACING SPAN 11	SPAN 12	SPAN 13	SPAN 14
1	97'-0 15/16"	67'-0 15/16"	130'-9 1/8"	67'-9 1/8"	137'-6 7/16"	74'-6 7/16"	108'-5 3/4"	79'-5 3/4"	554.96'	87 Spcs. @ 9"	86 Spcs. @ 9"	95 Spcs. @ 9"	104 Spcs. @ 9"
2	98'-4 7/16"	68'-4 7/16"	132'-5 13/16"	69'-5 13/16"	139'-4 1/4"	76'-4 1/4"	109'-11"	80'-11"	562.29'	89 Spcs. @ 9"	88 Spcs. @ 9"	97 Spcs. @ 9"	106 Spcs. @ 9"
3	99'-7 15/16"	69'-7 15/16"	134'-2 9/16"	71'-2 9/16"	141'-2 1/16"	78'-2 1/16"	111'-4 3/16"	82'-4 3/16"	569.63'	91 Spcs. @ 9"	91 Spcs. @ 9"	100 Spcs. @ 9"	109 Spcs. @ 9"
4	100'-11 7/16"	70'-11 7/16"	135'-11 5/16"	72'-11 5/16"	142'-11 7/8"	79'-11 7/8"	112'-9 3/8"	83'-9 3/8"	576.96'	92 Spcs. @ 9"	94 Spcs. @ 9"	102 Spcs. @ 9"	110 Spcs. @ 9"

REVISIONS

DATE	BY	DESCRIPTION

DEPARTMENT OF HIGHWAYS
COOK COUNTY, ILLINOIS

GEORGE W. DUNNE
PRESIDENT BOARD OF COMMISSIONERS

SUPERINTENDENT OF HIGHWAYS

STR. STEEL FRAMING PLAN & DETAILS
STONY ISLAND CONNECTOR TO FAI 94
RAMP Q STRUCTURE

KNOERLE, BENDER, STONE & ASSOCIATES INC.
CONSULTING ENGINEERS
CHICAGO, ILLINOIS

PROJECT EBU 246(72)
SCALE
APPROVED

APPROVED 4-11-72
CHIEF ENGINEER

F.A. Route No.	COUNTY HWY. Route No.	Sheet No.	Total Sheets	Drawing No.
122	174A	29	109	

BOWMAN, BARRETT & ASSOCIATES INC.
CONSULTING ENGINEERS
Chicago, Illinois
312.228.0100
www.bbandainc.com

USER NAME =	DESIGNED -	REVISED -
	CHECKED - BAK	REVISED -
PLOT SCALE =	DRAWN -	REVISED -
PLOT DATE = 11/08/2012	CHECKED -	REVISED -

STATE OF ILLINOIS
DEPARTMENT OF TRANSPORTATION

EXISTING PLANS (FOR INFORMATION ONLY)
STRUCTURE NO. 016-2437

SHEET NO. S-69 OF S-83 SHEETS

F.A.I. RTE.	SECTION	COUNTY	TOTAL SHEETS	SHEET NO.
94	2012-060-BR	COOK	285	232

CONTRACT NO. 60V61

ILLINOIS FED. AID PROJECT

S:\1072\95.CADD\Structural\SN 0162437-68J12-069-FY06.dgn 12/7/2012 2:26:48 PM

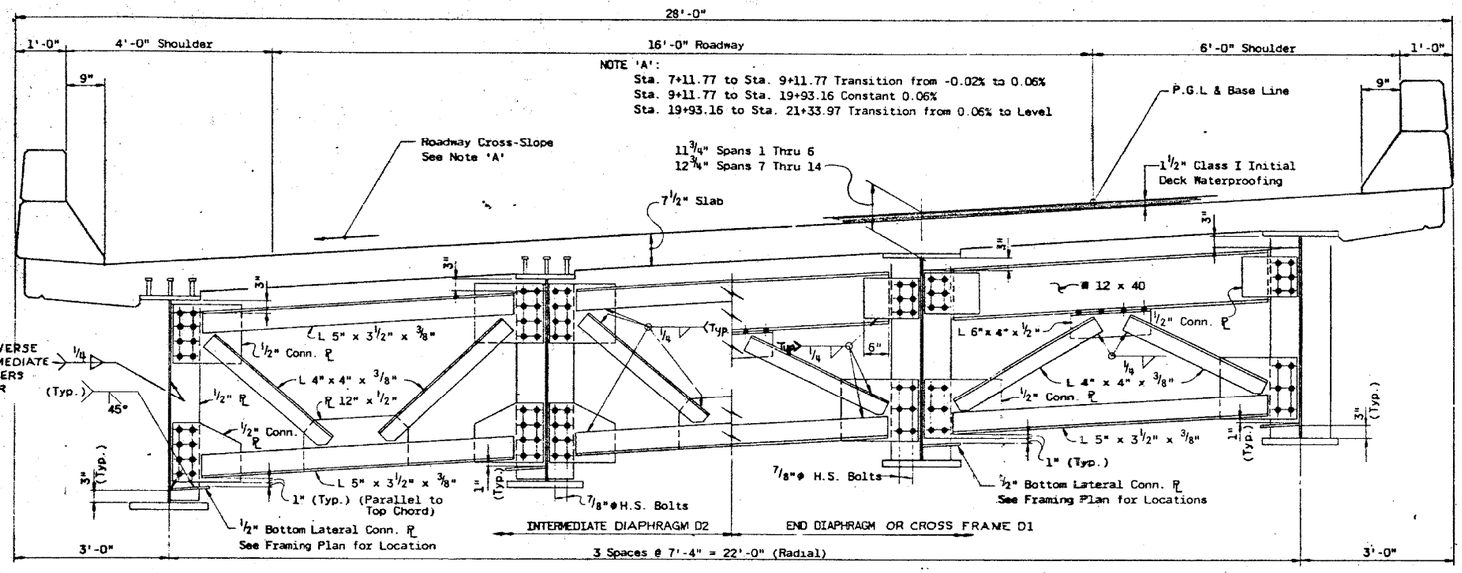

TYPICAL CROSS SECTION (WITH BOTTOM LATERALS)

SCALE: 3/4" = 1'-0"

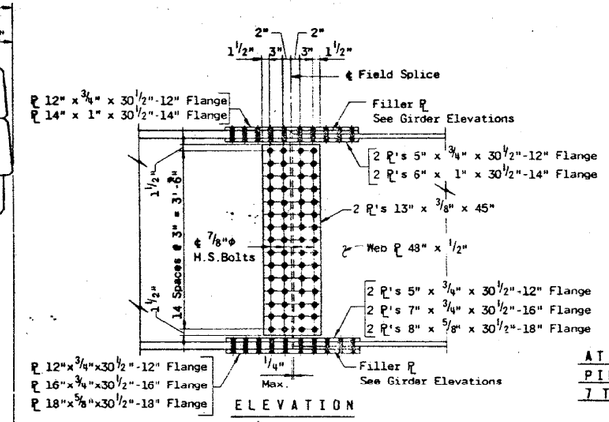

ELEVATION

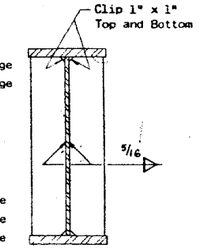

AT ABUTMENT NO. 1 & PIERS 1 THRU 5, 7 THRU 9, 11 THRU 13.

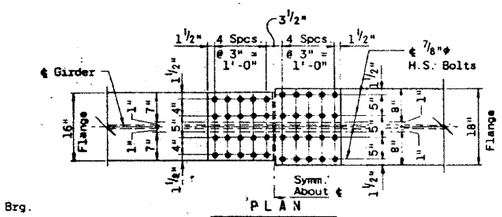

PLAN

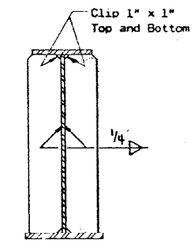

AT ABUTMENT NO. 2 & PIERS 6 AND 10

NOTE: Bearing Stiffeners shall be milled on the bearing end and have a tight fit at the other end. For Plate Sizes, see Framing Plans.

BEARING STIFFENER DETAILS

NOT TO SCALE

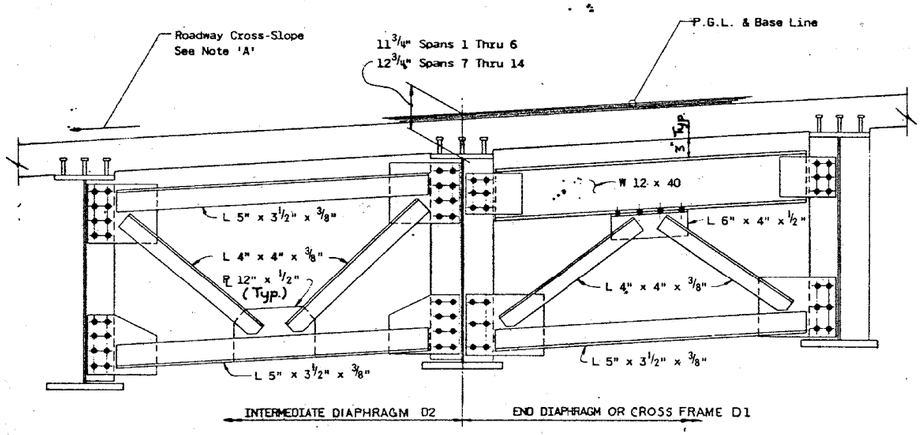

TYPICAL PART CROSS SECTION (WITHOUT BOTTOM LATERALS)

SCALE: 3/4" = 1'-0"

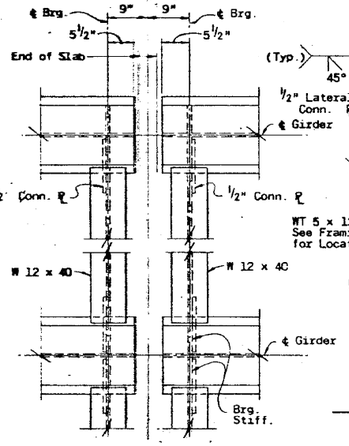

DETAIL 'A'

SCALE: 3/4" = 1'-0"

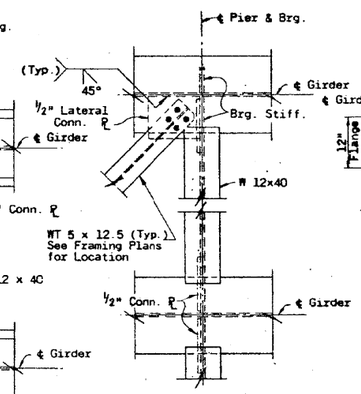

DETAIL 'B'

SCALE: 3/4" = 1'-0"

PLAN

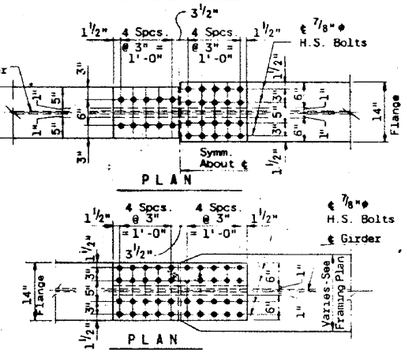

PLAN

FIELD SPLICE DETAILS

SCALE: 3/4" = 1'-0"

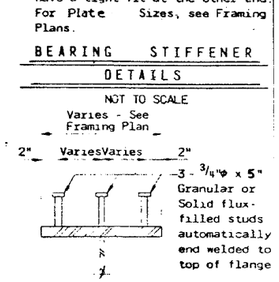

SHEAR CONNECTOR DETAILS

NOT TO SCALE

NOTES:

1. For locations of Details 'A', 'B', 'C', 'D' & Field Splices & additional notes, See Sheets 27, 28, & 29
2. For Slab Reinforcing, See Sheets 18, 19, & 20

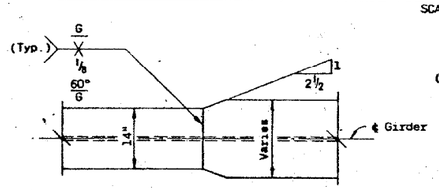

VARIABLE FLANGE WIDTH

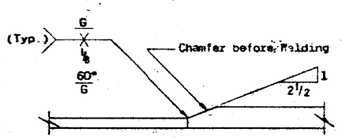

VARIABLE FLANGE THICKNESS

WELDED FLANGE SPLICE DETAILS

NOT TO SCALE

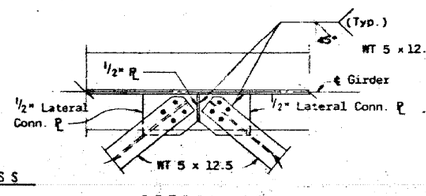

DETAIL 'C'

SCALE: 3/4" = 1'-0"

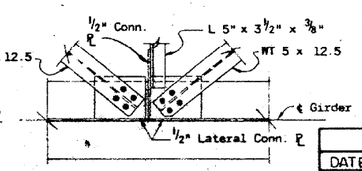

DETAIL 'D'

SCALE: 3/4" = 1'-0"

REVISIONS

DATE	BY	DESCRIPTION

DEPARTMENT OF HIGHWAYS
COOK COUNTY, ILLINOIS

GEORGE W. DUNNE
PRESIDENT BOARD OF COMMISSIONERS

SUPERINTENDENT OF HIGHWAYS

STRUCTURAL STEEL BRACING DETAILS

STONY ISLAND CONNECTOR TO FAI 94
RAMP Q STRUCTURE

KNOERLE, BENDER, STONE & ASSOCIATES INC.
CONSULTING ENGINEERS
CHICAGO, ILLINOIS

PROJECT EBU 246(7)
SCALE
APPROVED

APPROVED 4-11-72
CHIEF ENGINEER

F.A. Route No.	COUNTY HWY. Route No.	Sheet No.	Total Sheets	Drawing No.
122	174A	30	109	

BOWMAN, BARRETT & ASSOCIATES INC.
CONSULTING ENGINEERS
Chicago, Illinois
312.228.0100
www.bbandainc.com

USER NAME =	DESIGNED -	REVISED -
	CHECKED - BAK	REVISED -
PLOT SCALE =	DRAWN -	REVISED -
PLOT DATE = 11/08/2012	CHECKED -	REVISED -

STATE OF ILLINOIS
DEPARTMENT OF TRANSPORTATION

EXISTING PLANS (FOR INFORMATION ONLY)
STRUCTURE NO. 016-2437
SHEET NO. S-70 OF S-83 SHEETS

F.A.I. RTE.	SECTION	COUNTY	TOTAL SHEETS	SHEET NO.
94	2012-060-BR	COOK	285	233

CONTRACT NO. 60V61

ILLINOIS FED. AID PROJECT

S:\1072\05_CADD\Structural\SN 0162437\CADD Sheets\0162437-60J12-070-F107.dgn 12/7/2012 2:26:52 PM

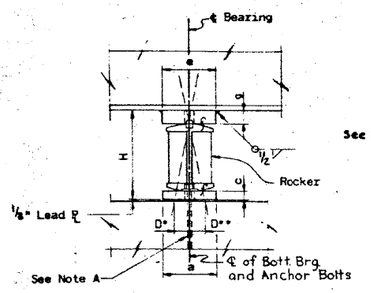

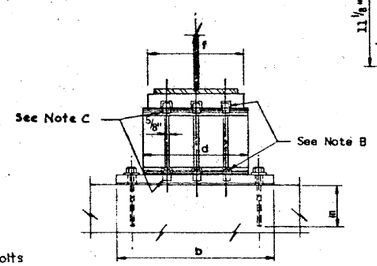

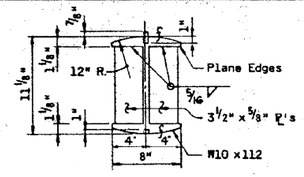

DETAIL OF ROCKER

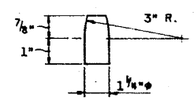

DETAIL OF PINTLE

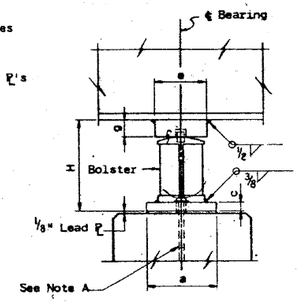

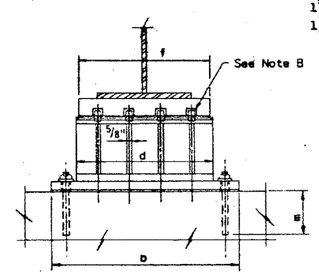

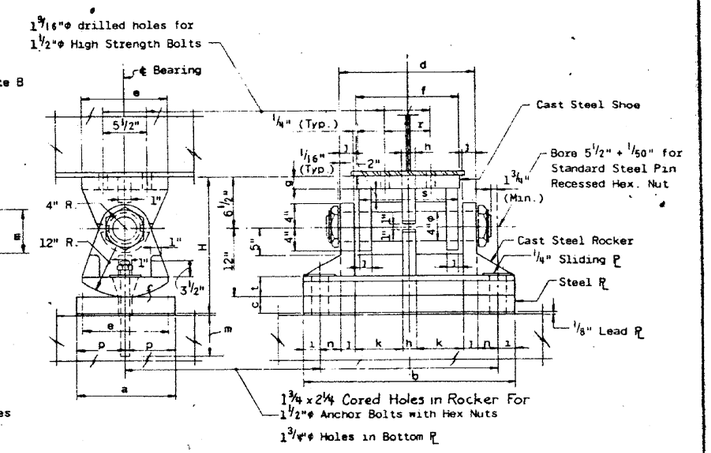

EXPANSION BEARING TYPE 'EE'

NOT TO SCALE (CASTING OR STEEL WELDMENTS)

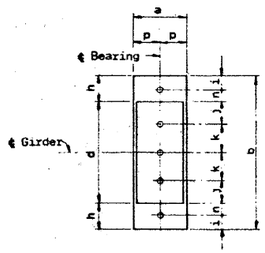

PLAN

NOTE:

D* 1/8"/100' of expansion for every 15° below the normal temp. of 50°F. (Side of Brg away from Fixed Brg.)

D** 1/8"/100' of expansion for every 15° above the normal temp. of 50°F. (Side of Brg. toward Fixed Brg.)

Note A 1 1/2"φ Anchor Bolts to be grouted into drilled holes after girders are in place. All fixed Anchor Bolts may be built into the masonry. Place 3" x 3" x 5/16" PL washer under nut.

Note B 1 3/8"φ holes 1" deep in top PL for Pintles.

Note C 1 3/4"φ holes 1" deep in bottom PL for Pintles. Thread or press fit Pintles into bottom PL

EXPANSION BEARING TYPE 'E'

NOT TO SCALE

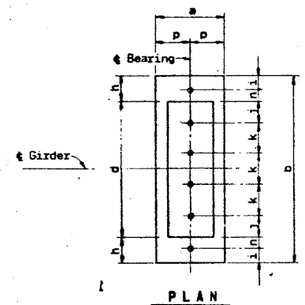

PLAN

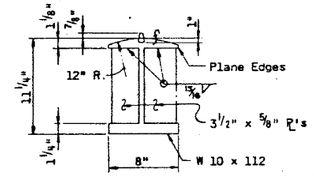

DETAIL OF BOLSTER

FIXED BEARING TYPE 'F'

NOT TO SCALE

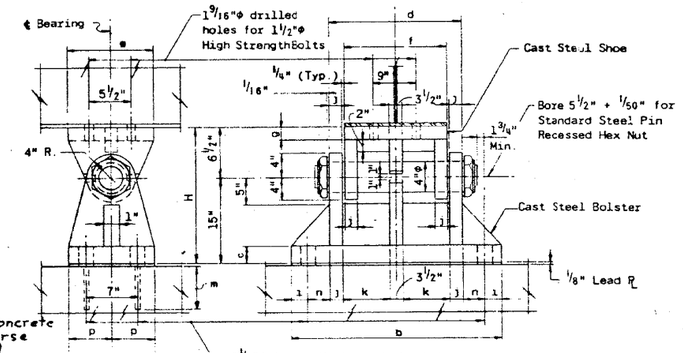

FIXED BEARINGS TYPE 'FF'

NOT TO SCALE (CASTING OR STEEL WELDMENTS)

BEARING SCHEDULE

TYPE	a	b	c	d	e	f	g	h	i	j	k	m	n	p	t	H	r	s
E	9"	27"	1 3/4"	18"	9"	16 1/2"	2 1/2"	4 1/2"	2 1/2"	4"	5"	15"	2"	4 1/2"	---	15 3/8"	---	---
F	12"	33"	1 1/2"	24"	9"	22 1/2"	3"	4 1/2"	2 1/2"	3 3/4"	5 1/2"	15"	2"	6"	---	15 3/4"	---	---
EE-1	9"	29"	2 1/4"	12 1/2"	10"	16"	2"	0 *	2 1/4"	1"	5 1/4"	15"	6"	4 1/2"	3"	20 3/4"	4 3/4"	10"
EE-2	12"	36"	3"	19"	12"	16"	2"	3 1/2"	2 1/4"	1 1/4"	6 1/2"	15"	6 1/4"	6"	4 1/2"	21 1/2"	9"	16"
FF	12"	36"	3"	19"	12"	16"	2"	3 1/2"	2 1/4"	1 1/4"	6 1/2"	15"	6 1/4"	6"	---	21 1/2"	9"	16"

* MIDDLE PL IS OMITTED.

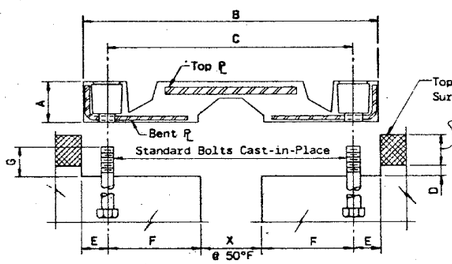

TYPE 2 1/2"

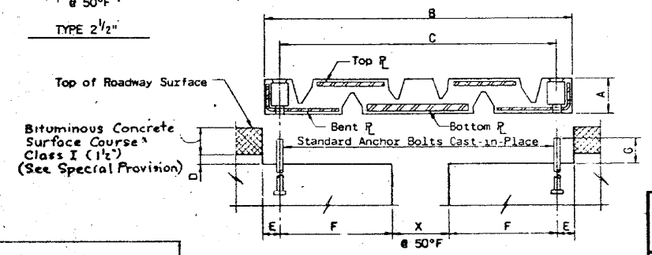

TYPE 4" & 6 1/2"

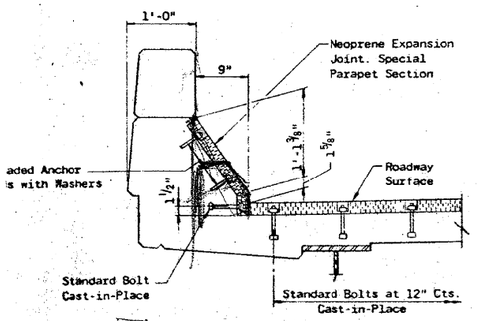

CURB INSTALLATION

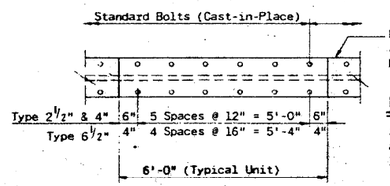

PLAN

NOTE:

Anchor Bolts, require a clipped washer, lockwasher and hex nut.

JOINT SCHEDULE

TYPE	A	B	C	D	E	F	G	X @ 50°F	ANCHOR BOLT	THICKNESS TOP PL	THICKNESS BOTTOM PL	THICKNESS BENT PL
2 1/2"	1 13/16"	13 1/2"	11"	1/2"	1 1/2"	4 1/4"	1 1/2"	2 1/2"	5/8"φ x 6"	3/8"	—	1/4"
4"	2 1/8"	22 3/4"	19 5/8"	13/16"	1 13/16"	8 1/16"	1 1/2"	3 1/2"	3/4"φ x 6"	5/16"	5/8"	5/16"
6 1/2"	3"	28"	24 1/4"	1 11/16"	2 5/8"	9 7/8"	2"	4 1/2"	3/4"φ x 6"	3/8"	1"	3/8"

NEOPRENE EXPANSION JOINT DETAILS

NOT TO SCALE

NOTES

1. For location of Bearing Types see sht. Nos. 27, 28 & 29
2. For location of Joints see sht. Nos. 18, 19 & 20
3. Erection of Bearings & Anchorage in accordance to Article 507.08 of Standard Specifications
4. Calculated weight of Structural Steel this sht. 64,720 LB. (Included in weights of Structural Steel Quantities on sht. No. 26). Calculated weight of Bearings in includes Rockers, Bolsters, Bearing PLs, Lead PLs, anchor bolts, nuts and washers.

REVISIONS

DATE	BY	DESCRIPTION

DEPARTMENT OF HIGHWAYS
COOK COUNTY, ILLINOIS

GEORGE W DUNNE
PRESIDENT BOARD OF COMMISSIONERS

SUPERINTENDENT OF HIGHWAYS

STRUCTURAL STEEL BEARING DETAILS

STONY ISLAND CONNECTOR TO FAI 94
RAMP Q STRUCTURE

KNOERLE, BENDER, STONE & ASSOCIATES INC
CONSULTING ENGINEERS
CHICAGO, ILLINOIS

PROJECT EQU 246(17)
SCALE
APPROVED

APPROVED 4-11-72

F.A. Route No.	COUNTY HWY. Route No.	Sheet No.	Total Sheets	Drawing No.
122	174A	31	109	

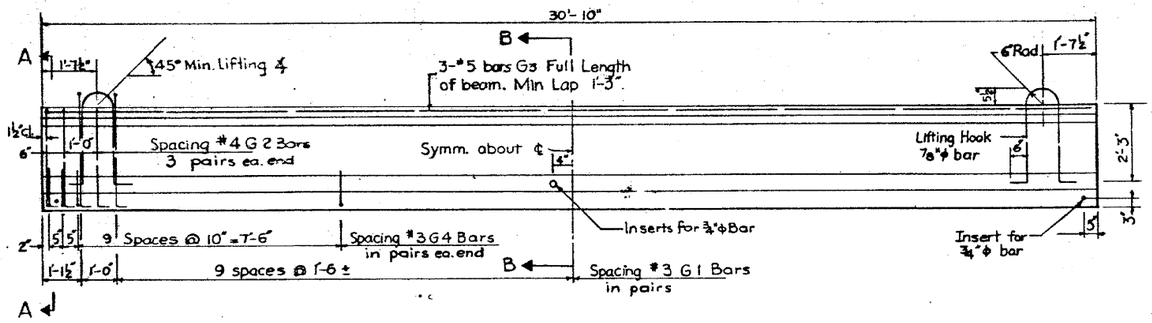

ELEVATION OF BEAM

SHOWING REINFORCEMENT & DIMENSIONS

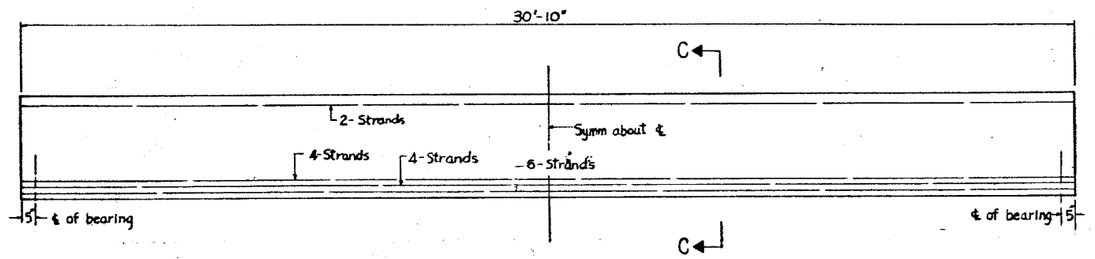

ELEVATION OF BEAM

SHOWING PRESTRESSING STEEL

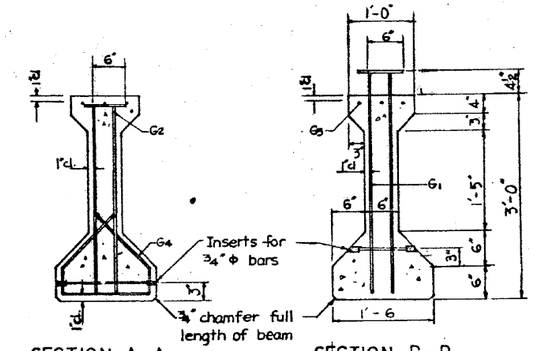

SECTION A-A

SECTION B-B

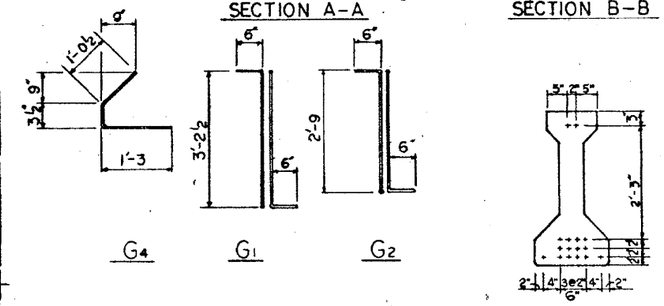

SECTION C-C

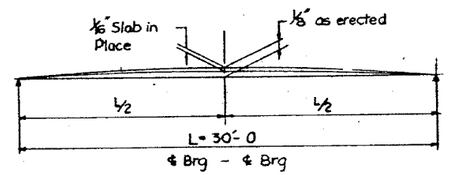

CAMBER DIAGRAM

BAR LIST

Bar	No.	Size	Length	Shape
G1	42	#4	4'-2½"	7L
G2	12	#4	3'-9"	7L
G3	6	#5	16'-0"	——
G4	48	#3	2'-7"	∠

* for one beam only

NOTES

1. Prestressing tendons are 7 wire 7/16"φ Nominal diameter stress relieved strands. f's = 248 ksi; fsi = 173 ksi.
2. All inserts and threaded rods for inserts, reinforcement and Prestressing Steel, and other items which are cast into the Precast Concrete I-Beams shall be included in the contract unit price per lineal foot of Furnishing and Erecting Precast Prestressed Concrete I-Beam, 36".
3. Inserts for ¾"φ threaded rod are to be two strut coil type.
4. Steel for lifting hooks shall be non-deformed bars of Structural or Intermediate grade billet steel.
5. An alternate strand pattern using Extra High Strength Prestressing Strand (270 ksi.) is permitted.
6. End of beam to be encased with cast in place concrete shall not be coated with asphalt paint for diaphragm details see sheet No. 33.

BILL OF MATERIAL

Item	Unit	Total
Furnishing & Erecting Precast Prestressed Concrete I-Beam, 36"	Lin. ft	93

REVISIONS

DATE	BY	DESCRIPTION

DEPARTMENT OF HIGHWAYS
COOK COUNTY, ILLINOIS
GEORGE W. DUNNE
PRESIDENT BOARD OF COMMISSIONERS
SUPERINTENDENT OF HIGHWAYS

PRECAST PRESTR. CONC. I-BEAM 36"
STONY ISLAND CONNECTOR TO FAI 94
RAMP Q STRUCTURE

KINDERLE, BENDER, STONE & ASSOCIATES INC
CONSULTING ENGINEERS
CHICAGO, ILLINOIS

PROJECT EBU 246(77)
SCALE
APPROVED

APPROVED 4-11-72
CHIEF ENGINEER

F.A. Route No	County Hwy Route No	Sheet No	Total Sheets	Drawing No
122	174A	32	109	

S:\1872\05.CADD\Structural\SN 0162437\CADD Sheets\0162437-60J12-072-FY09.dgn 12/7/2012 2:26:59 PM

BOWMAN, BARRETT & ASSOCIATES INC.
CONSULTING ENGINEERS
Chicago, Illinois
312.228.0100
www.bbandainc.com

USER NAME =	DESIGNED -	REVISED -
	CHECKED - BAK	REVISED -
PLOT SCALE =	DRAWN -	REVISED -
PLOT DATE = 11/08/2012	CHECKED -	REVISED -

STATE OF ILLINOIS
DEPARTMENT OF TRANSPORTATION

EXISTING PLANS (FOR INFORMATION ONLY)
STRUCTURE NO. 016-2437
SHEET NO. S-72 OF S-83 SHEETS

F.A.I. RTE.	SECTION	COUNTY	TOTAL SHEETS	SHEET NO.
94	2012-060-BR	COOK	285	235

CONTRACT NO. 60V61

ILLINOIS FED. AID PROJECT

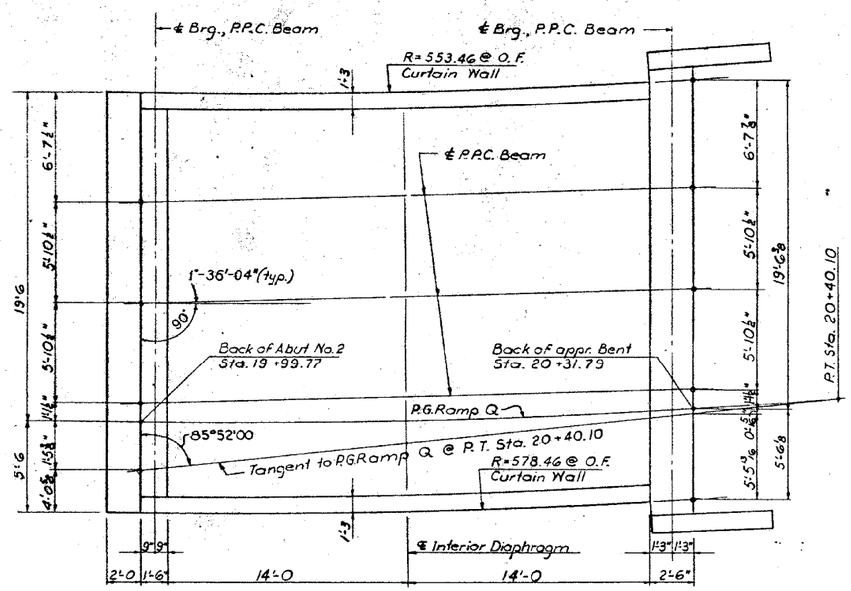

FRAMING PLAN

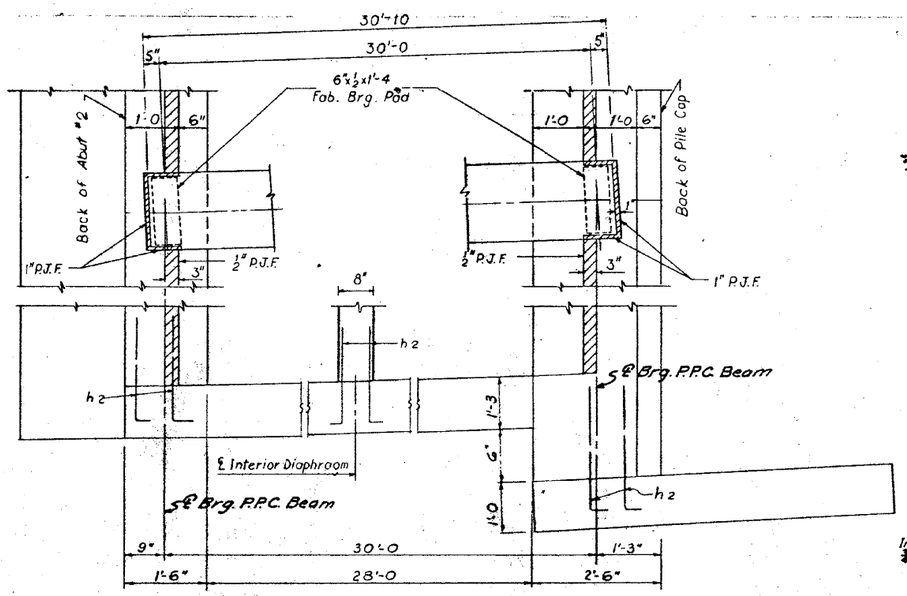

PARTIAL PLAN

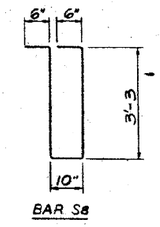

BAR S8

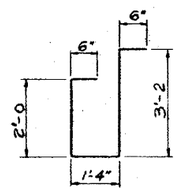

BAR S7

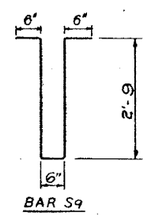

BAR S9

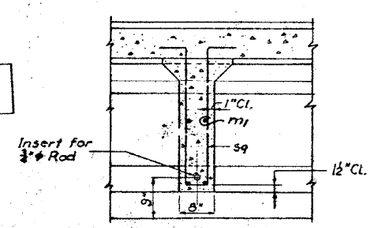

SECTION THRU INTERIOR DIAPHRAGM

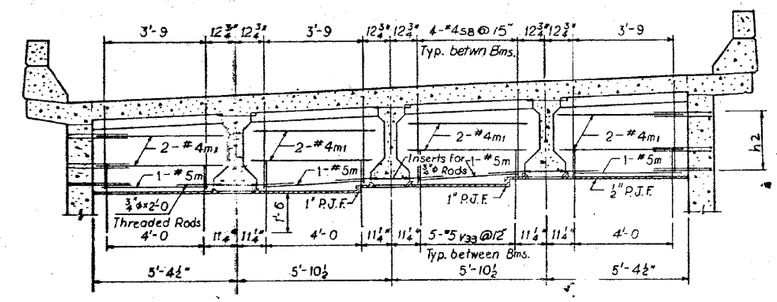

DIAPHRAGM AT ABUTMENT 2

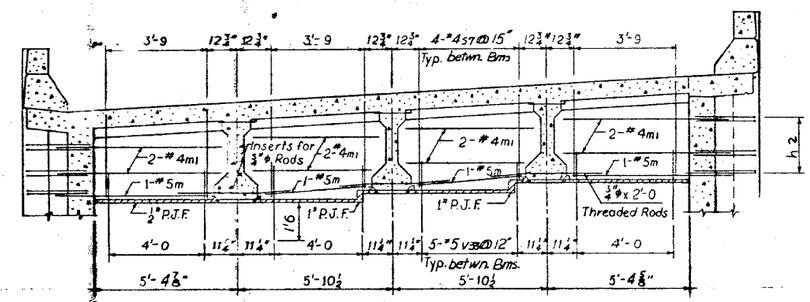

DIAPHRAGM AT APPROACH BENT

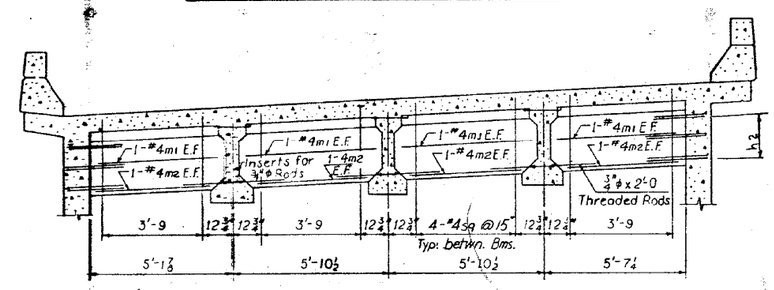

INTERIOR DIAPHRAGM

NOTE

℄ Brg. P.C.C. Beams, Back of Abut. #2 & Back of approach bent are all parallel.

For P.C.C. Beam Details See Sht. No. 32

Preformed Joint Filler shall be incidental to Class X Concrete.

For Bill of Material See Sheet No. 21

REVISIONS		
DATE	BY	DESCRIPTION

DEPARTMENT OF HIGHWAYS
COOK COUNTY, ILLINOIS
GEORGE W DUNNE
PRESIDENT BOARD OF COMMISSIONERS
SUPERINTENDENT OF HIGHWAYS

DIAPHRAGM DETAILS

STONY ISLAND CONNECTOR TO FAI 94
RAMP Q STRUCTURE

KNOERLE, BENDER, STONE & ASSOCIATES INC.
CONSULTING ENGINEERS
CHICAGO, ILLINOIS

PROJECT E8U246(77)
SCALE
APPROVED
APPROVED 4-11-77

F.A. Route No.	County Hwy. Route No.	Sheet No.	Total Sheets	Drawing No.
122	174A	33	109	

S:\1072\05_CADD\Structural\SN 0162437\CADD Sheets\0162437-68J12-073-FY10.dgn 12/7/2012 2:27:03 PM

BOWMAN, BARRETT & ASSOCIATES INC.
CONSULTING ENGINEERS
Chicago, Illinois
312.228.0100
www.bbandainc.com

USER NAME =	DESIGNED -	REVISED -	
	CHECKED - BAK	REVISED -	
PLOT SCALE =	DRAWN -	REVISED -	
PLOT DATE = 11/08/2012	CHECKED -	REVISED -	

STATE OF ILLINOIS
DEPARTMENT OF TRANSPORTATION

EXISTING PLANS (FOR INFORMATION ONLY)
STRUCTURE NO. 016-2437
SHEET NO. S-73 OF S-83 SHEETS

F.A.I. RTE.	SECTION	COUNTY	TOTAL SHEETS	SHEET NO.
94	2012-060-BR	COOK	285	236

CONTRACT NO. 60V61
ILLINOIS FED. AID PROJECT

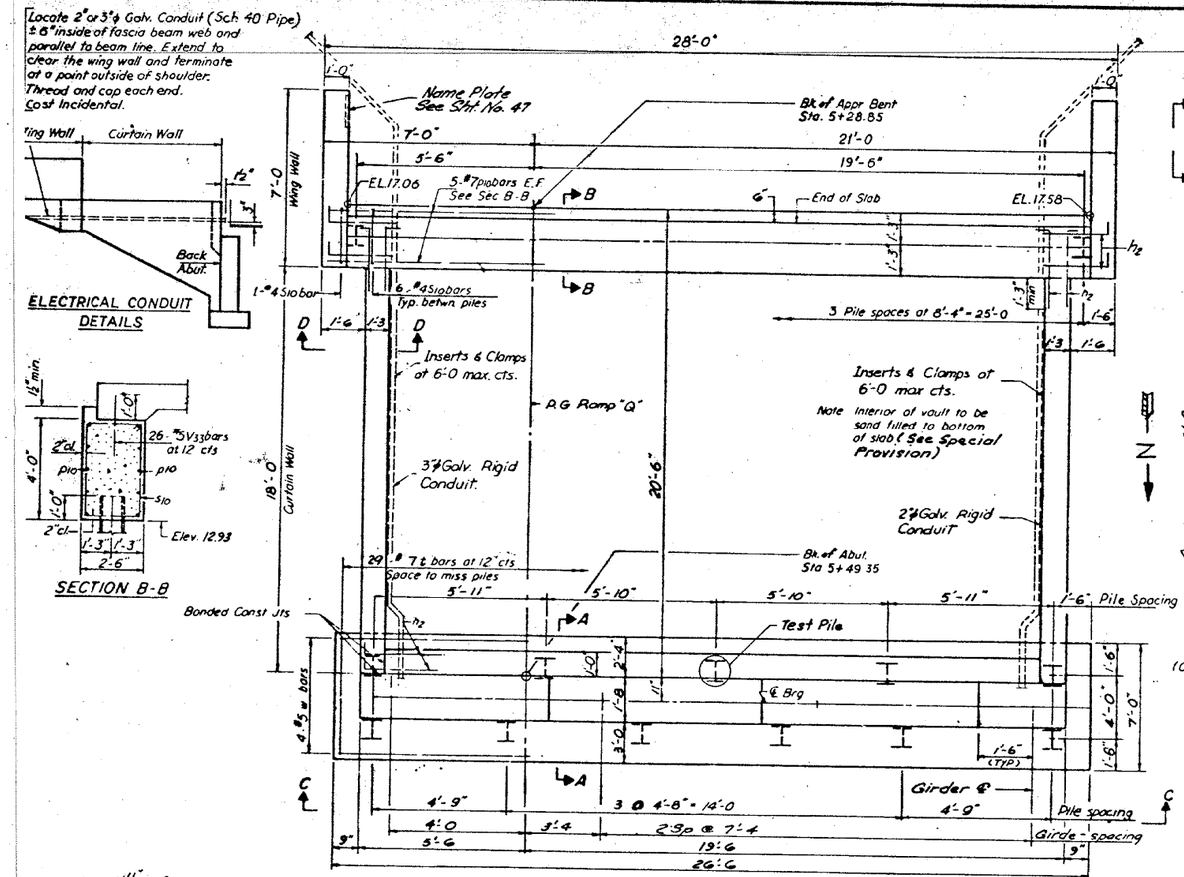

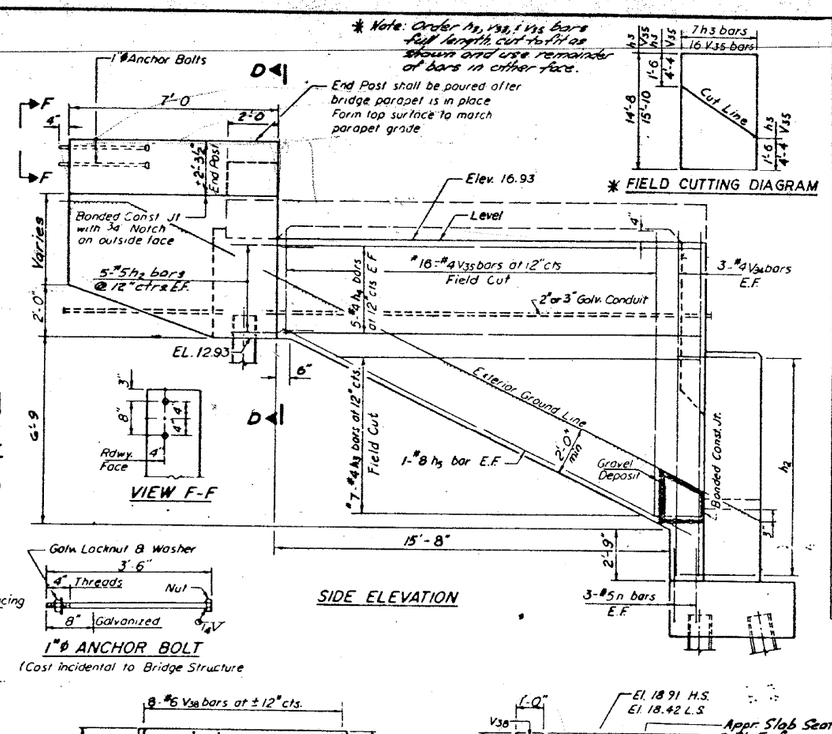

BILL OF MATERIAL

BAR	NO	SIZE	LENGTH	SHAPE
h	4	#5	7'-6"	
h1	10	#5	22'-2"	
h2	82	#5	4'-0"	
h3	14	#5	14'-8"	
h4	20	#5	17'-8"	
h5	4	#8	19'-9"	
h6	36	#4	6'-9"	
h7	18	#5	24'-8"	
h8	4	#5	2'-8	
n	33	#5	4'-7"	
n1	25	#9	6'-9"	
p10	10	#7	27'-8"	
s10	20	#4	12'-6"	
t	29	#7	6'-6"	
V30	25	#5	9'-5"	
V31	23	#5	5'-10"	
V32	23	#5	6'-9"	
V33	49	#5	2'-0"	
V34	12	#4	14'-6"	
V35	32	#4	15'-10	
V36	20	#6	7'-0"	
V37	12	#6	5'-6"	
V38	16	#6	4'-9"	
V39	25	#9	9'-5	
V40	23	#5	Varies	
w	4	#5	26'-0	

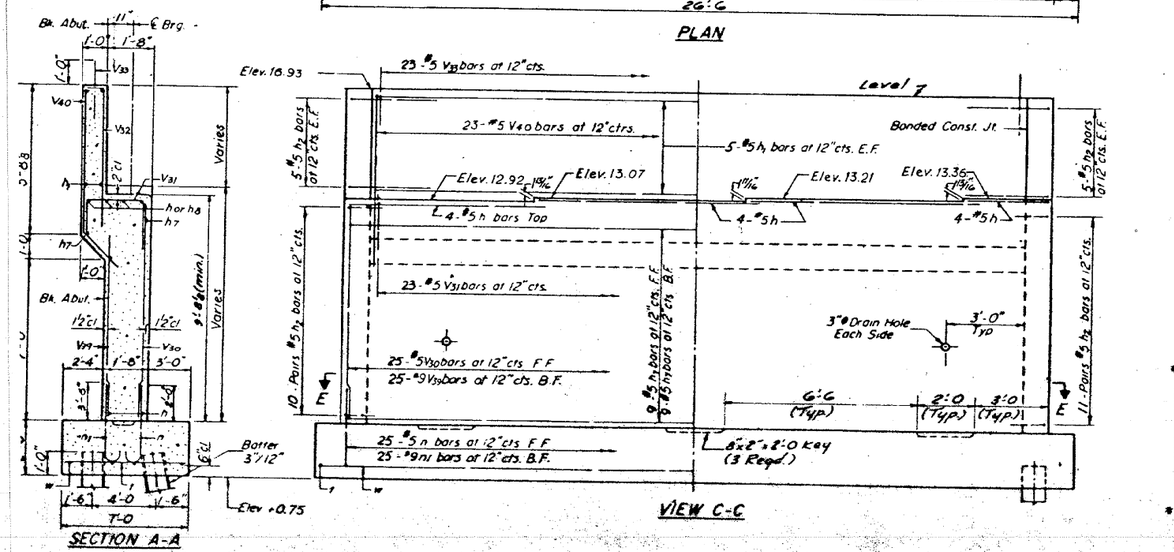

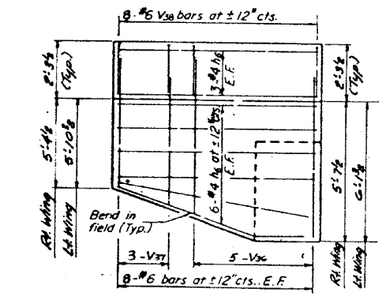

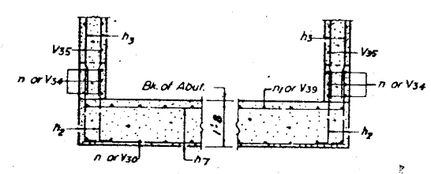

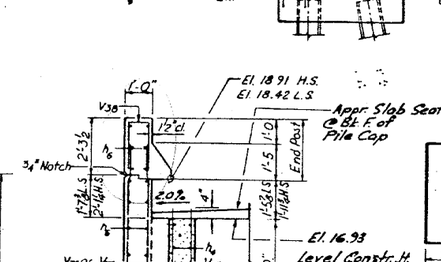

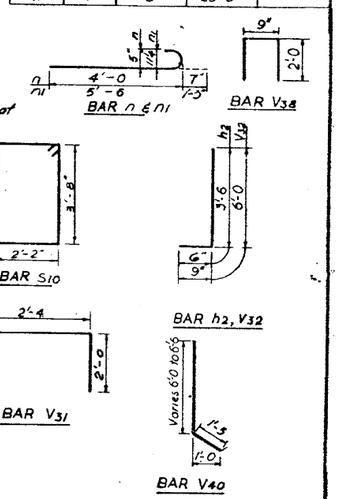

ABUT - PILE DATA

Type HP 10x42
Capacity 40 Tons
Est Length 23'-0
No Req'd. 10
Test Pile 1 Req'd.

APPR BENT - PILE DATA

Type HP 10x42
Capacity 35 Tons
Est Length 32'-0
No Req'd 4

For Approach Slab Seat Elevations See Sht. No. 17

For Construction Joint Detail See Sht. No. 47
For Pile Encasement Detail See Sht. No. 47

* Does not include Test Pile.

ESTIMATED QUANTITIES

ITEM	UNIT	TOTALS
REINFORCEMENT BARS	LB.	6505
CLASS "X" CONCRETE	C.Y.	63.7
RIGID STEEL CONDUIT, 2 DIA.	LIN. FT.	30
RIGID STEEL CONDUIT, 3 DIA.	LIN. FT.	30
* FURN. STEEL PILES HP10x42	LIN. FT.	358
DRIVING STL. PILES HP10x42	LIN. FT.	358
TEST PILES HP10x42	EACH	1
SAND BACKFILL		

REVISIONS

DATE	BY	DESCRIPTION

DEPARTMENT OF HIGHWAYS
COOK COUNTY, ILLINOIS
GEORGE W. DUNNE, PRESIDENT BOARD OF COMMISSIONERS — SUPERINTENDENT OF HIGHWAYS

ABUT. NO. 1 PLAN & ELEVATION

STONY ISLAND CONNECTOR TO FAI 94
RAMP Q STRUCTURE

KNOERLE, BENDER, STONE & ASSOCIATES INC. CONSULTING ENGINEERS CHICAGO, ILLINOIS

PROJECT EBU 246(77)
SCALE
APPROVED
APPROVED 4-11-72

T.A. Route No.	COUNTY HWY Route No.	Sheet No.	Total Sheets	Drawing No.
122	174 R	34	109	

BOWMAN, BARRETT & ASSOCIATES INC.
CONSULTING ENGINEERS
Chicago, Illinois
312.228.0100
www.bbandainc.com

USER NAME =	DESIGNED -	REVISED -
	CHECKED - BAK	REVISED -
PLOT SCALE =	DRAWN -	REVISED -
PLOT DATE = 11/08/2012	CHECKED -	REVISED -

STATE OF ILLINOIS
DEPARTMENT OF TRANSPORTATION

EXISTING PLANS (FOR INFORMATION ONLY)
STRUCTURE NO. 016-2437
SHEET NO. S-74 OF S-83 SHEETS

F.A.I. RTE.	SECTION	COUNTY	TOTAL SHEETS	SHEET NO.
94	2012-060-BR	COOK	285	237

CONTRACT NO. 60V61
ILLINOIS FED. AID PROJECT

S:\0172\05_CADD\Structural\SN 0162437-60J12-874-FY11.dgn 12/7/2012 2:27:08 PM

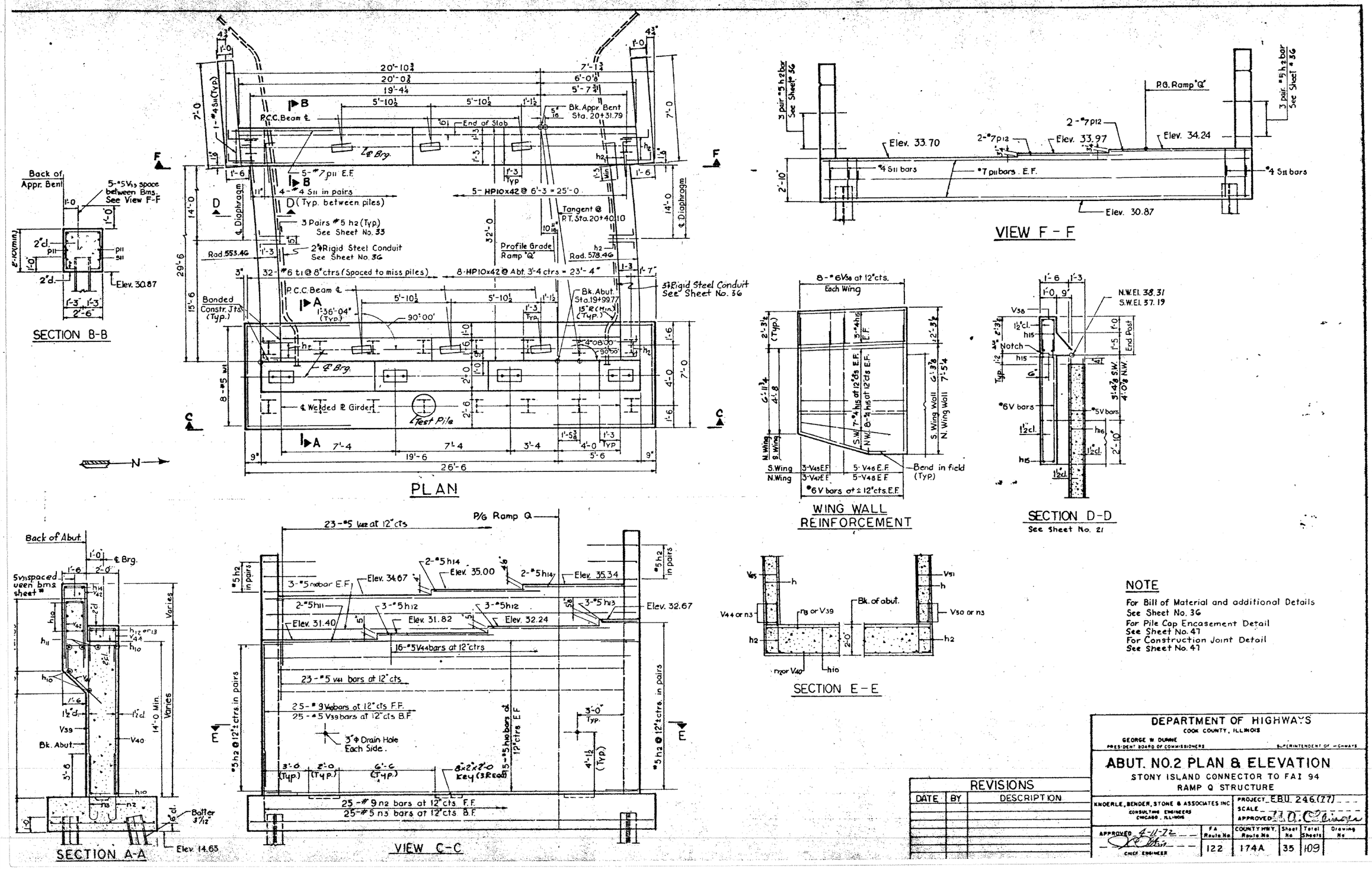

NOTE

For Bill of Material and additional Details
See Sheet No. 36
For Pile Cap Encasement Detail
See Sheet No. 47
For Construction Joint Detail
See Sheet No. 47

REVISIONS		
DATE	BY	DESCRIPTION

DEPARTMENT OF HIGHWAYS
COOK COUNTY, ILLINOIS
GEORGE W. DUNNE
PRESIDENT BOARD OF COMMISSIONERS
SUPERINTENDENT OF HIGHWAYS

ABUT. NO. 2 PLAN & ELEVATION

STONY ISLAND CONNECTOR TO FAI 94
RAMP Q STRUCTURE

KNOERLE, BENDER, STONE & ASSOCIATES INC.
CONSULTING ENGINEERS
CHICAGO, ILLINOIS

PROJECT E.B.U. 246.(77)
SCALE
APPROVED

APPROVED 4-11-72
CHIEF ENGINEER

F.A. Route No.	County Hwy. Route No.	Sheet No.	Total Sheets	Drawing No.
122	174A	35	109	

BOWMAN, BARRETT & ASSOCIATES INC.
CONSULTING ENGINEERS
Chicago, Illinois
312.228.0100
www.bbandainc.com

USER NAME =	DESIGNED -	REVISED -
	CHECKED - BAK	REVISED -
PLOT SCALE =	DRAWN -	REVISED -
PLOT DATE = 11/08/2012	CHECKED -	REVISED -

STATE OF ILLINOIS
DEPARTMENT OF TRANSPORTATION

EXISTING PLANS (FOR INFORMATION ONLY)
STRUCTURE NO. 016-2437
SHEET NO. S-75 OF S-83 SHEETS

F.A.I. RTE.	SECTION	COUNTY	TOTAL SHEETS	SHEET NO.
94	2012-060-BR	COOK	285	238

CONTRACT NO. 60V61
ILLINOIS FED. AID PROJECT

S:\1872\95.CADD\Structural\SN 0162437-68J12-075-FY12.dgn 12/7/2012 2:27:12 PM

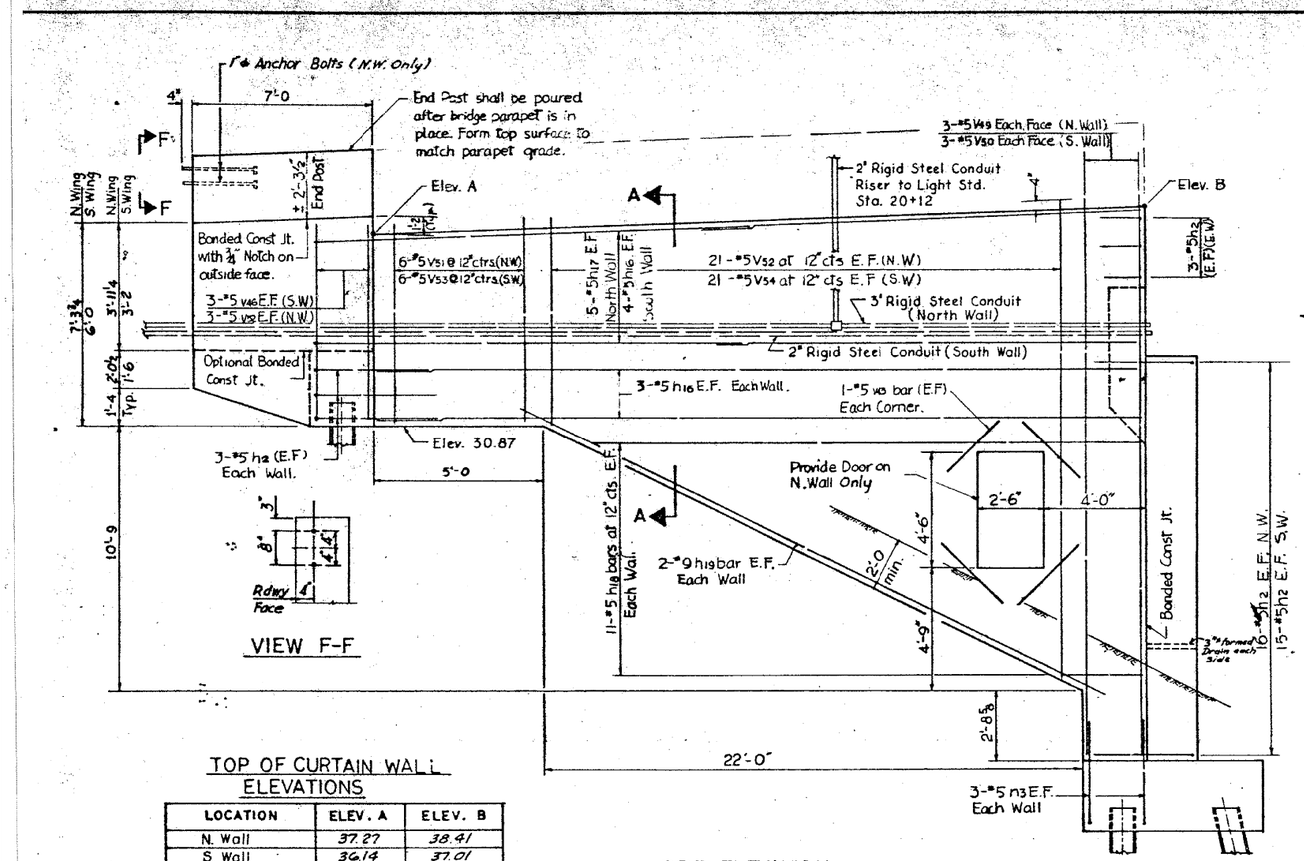

SIDE ELEVATION
Looking North

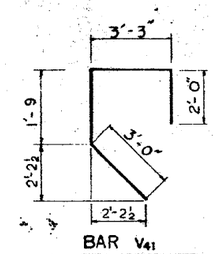

BAR V41

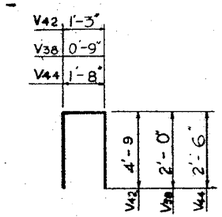

BAR V38 V42 V44

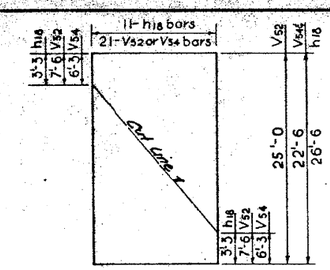

FIELD CUTTING DIAGRAM
Order h18, V52 & V54 bars full length. Cut to fit as shown and use remainder of bars in other face.

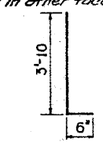

BAR h2

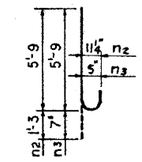

BAR n2 or n3

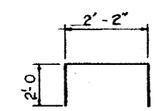

BAR S11

BILL OF MATERIAL

BAR	NO.	SIZE	LENGTH	SHAPE
h2	110	#5	4'-4	
h10	36	#5	24'-9	
h11	2	#5	24'-9	
h12	6	#5	8'-0	
h13	3	#5	2'-6	
h14	4	#5	8'-6	
h15	42	#5	6'-9	
h16	12	#5	29'-3	
h17	18	#5	31'-8	
h18	22	#5	26'-6	
h19	4	#5	24'-6	
n2	25	#9	7'-0	
n3	37	#5	6'-4	
p11	10	#7	27'-9	
p12	4	#7	8'-6	
S11	44	#4	6'-2	
t1	32	#6	6'-8	
V33	20	#5	2'-0	
V38	16	#6	4'-9	
V39	25	#5	13'-9	
V40	25	#9	13'-9	
V41	23	#5	10'-0	
V42	23	#5	10'-9	
V43	8	#5	5'-0	
V44	6	#5	6'-8	
V45	6	#6	6'-3	
V46	10	#6	7'-3	
V47	6	#6	7'-4	
V48	10	#6	8'-3	
V49	6	#5	21'-0	
V50	6	#5	19'-9	
V51	12	#5	7'-3	
V52	21	#5	25'-0	
V53	12	#5	5'-9	
V54	21	#5	22'-6	
W1	8	#5	26'-2	

ABUT-PILE DATA

Type HP 10x42
Capacity 40 TONS
Est. Length 48'-0
No. Req'd 15
Test Pile 1 Req'd

APPR. BENT-PILE DATA

Type HP 10x42
Capacity 35 TONS
Est. Length 60'-0
No. Req'd 5

TOP OF CURTAIN WALL ELEVATIONS

LOCATION	ELEV. A	ELEV. B
N. Wall	37.27	38.41
S. Wall	36.14	37.01

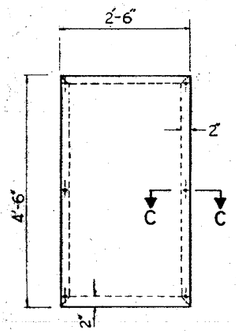

DOOR ELEVATION
(Cost of door and frame are incidental)

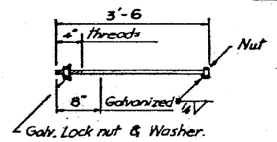

1"φ ANCHOR BOLT
(Cost incidental to Bridge Structure)

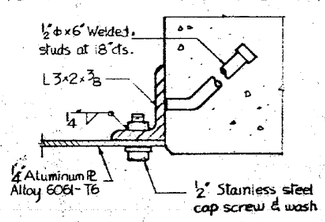

SECTION C-C

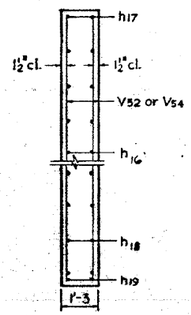

SECTION A-A

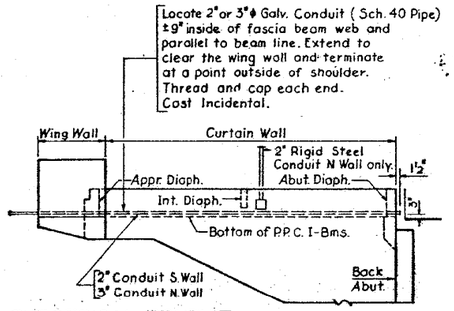

ELECTRICAL CONDUIT DETAILS

NOTES

S.W. Indicates South Wing Wall or South Curtain Wall.
N.W. Indicates North Wing Wall or North Curtain Wall.
E.F. Indicates Each Face.
E.W. Indicated Each Wall or Each Wing Wall.

NOTE

For Abutment No. 2 Plan and Elevation See Sh
For Pile Encasement Details See Sht. No.

*Does not include Test Pile.

ESTIMATED QUANTITIES

ITEM	UNIT	TOTALS
REINFORCEMENT BARS	LB.	9832
CLASS "X" CONCRETE	C.Y.	126.4
RIGID STEEL CONDUIT, 2" DIA.	LIN.FT.	55
RIGID STEEL CONDUIT, 3" DIA.	LIN.FT.	45
* FURN. STEEL PILES HP10X42	LIN.FT.	1020
DRIVING STEEL PILES	LIN.FT.	1020
TEST PILES HP10X42	EACH	1

REVISIONS		
DATE	BY	DESCRIPTION

DEPARTMENT OF HIGHWAYS
COOK COUNTY, ILLINOIS
GEORGE W. DUNNE
PRESIDENT BOARD OF COMMISSIONERS — SUPERINTENDENT OF HIGHWAYS

ABUTMENT NO. 2 DETAILS

STONY ISLAND CONNECTOR TO F.A.I. 94
RAMP Q STRUCTURE

KNOERLE, BENDER, STONE & ASSOCIATES INC.
CONSULTING ENGINEERS
CHICAGO, ILLINOIS

PROJECT EBU246 (77)
SCALE
APPROVED

APPROVED 4-11-72
CHIEF ENGINEER

F.A. Route No	COUNTY HWY Route No	Sheet No	Total Sheets	Drawing No
122	174A	36	109	

BOWMAN, BARRETT & ASSOCIATES INC.
CONSULTING ENGINEERS
Chicago, Illinois
312.228.0100
www.bbandainc.com

USER NAME =	DESIGNED -	REVISED -
	CHECKED - BAK	REVISED -
PLOT SCALE =	DRAWN -	REVISED -
PLOT DATE = 11/08/2012	CHECKED -	REVISED -

STATE OF ILLINOIS
DEPARTMENT OF TRANSPORTATION

EXISTING PLANS (FOR INFORMATION ONLY)
STRUCTURE NO. 016-2437
SHEET NO. S-76 OF S-83 SHEETS

F.A.I. RTE.	SECTION	COUNTY	TOTAL SHEETS	SHEET NO.
94	2012-060-BR	COOK	285	239

CONTRACT NO. 60V61
ILLINOIS FED. AID PROJECT

S:\1072\105_CADD\Structural\SN 0162437\CADD Sheets\0162437-68J12-076-FY13.dgn 12/7/2012 2:27:16 PM

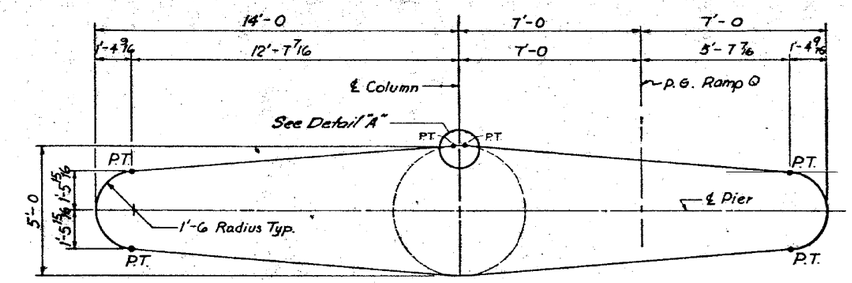

PLAN

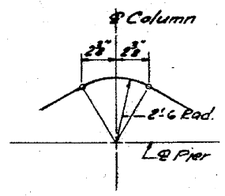

DETAIL "A"

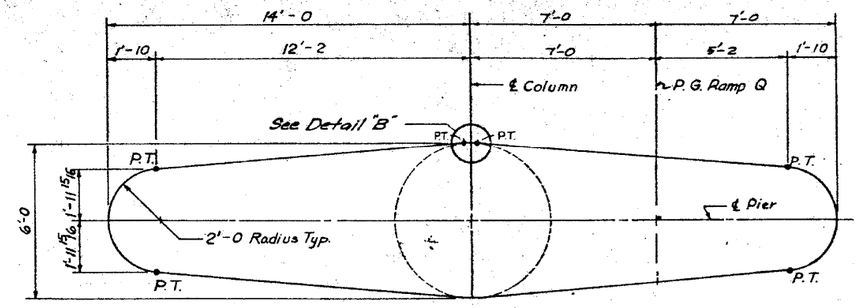

PLAN

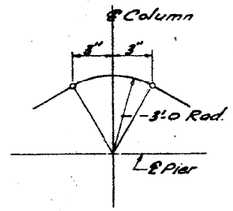

DETAIL "B"

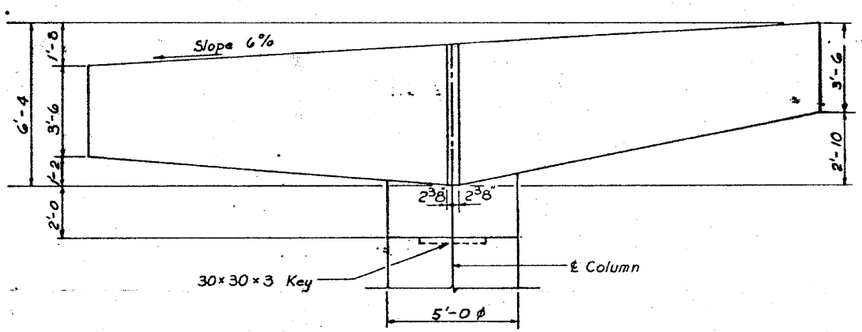

ELEVATION
Typ. For Piers 4 Thru 6

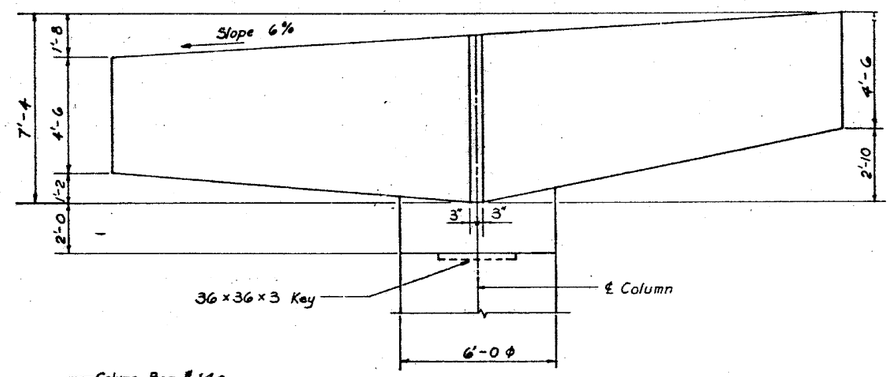

ELEVATION
Typ. For Piers 7 Thru 13

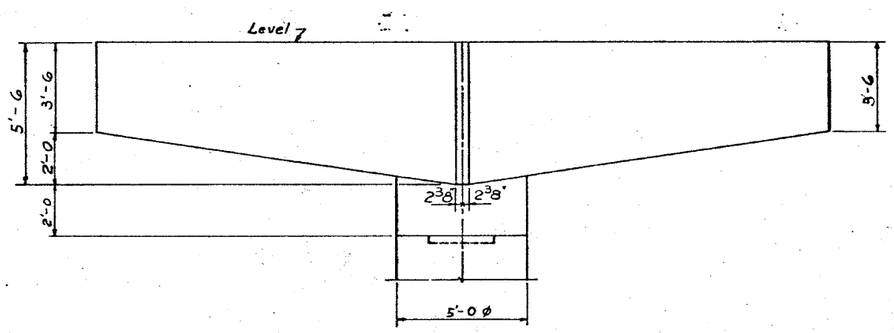

ELEVATION
Typ. For Piers 1 Thru 3

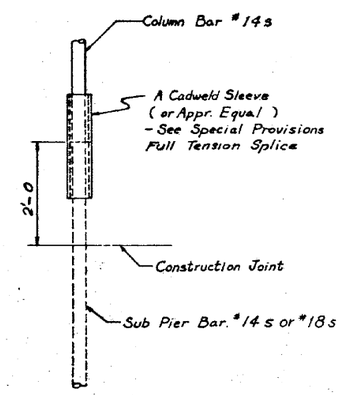

TYP. COLUMN BAR SPLICE *

*NOTE

As an alternate, the Contractor may elect at his option to weld the Column bar splices in the field in lieu of providing the mechanical couplers shown in the plans. If the Contractor supplies welded bar splices, the preparation of the reinforcement bars and the welding process shall be in conformance with the Special Provision for Welding Reinforcing Steel included in the Contract Document for this improvement

REVISIONS		
DATE	BY	DESCRIPTION

DEPARTMENT OF HIGHWAYS
COOK COUNTY, ILLINOIS

GEORGE W DUNNE
PRESIDENT BOARD OF COMMISSIONERS

SUPERINTENDENT OF HIGHWAYS

PIER CAP DETAILS

STONY ISLAND CONNECTOR TO FAI 94
RAMP Q STRUCTURE

KNOERLE, BENDER, STONE & ASSOCIATES INC.
CONSULTING ENGINEERS
CHICAGO, ILLINOIS

PROJECT EBU 246 (7,7)
SCALE
APPROVED

APPROVED 4-11-72

FA Route No.	COUNTY HWY. Route No.	Sheet No	Total Sheets	Drawing No
122	174A	37	109	

BOWMAN, BARRETT & ASSOCIATES INC.
CONSULTING ENGINEERS
Chicago, Illinois
312.228.0100
www.bbandainc.com

USER NAME =	DESIGNED -	REVISED -
	CHECKED - BAK	REVISED -
PLOT SCALE =	DRAWN -	REVISED -
PLOT DATE = 11/08/2012	CHECKED -	REVISED -

STATE OF ILLINOIS
DEPARTMENT OF TRANSPORTATION

EXISTING PLANS (FOR INFORMATION ONLY)
STRUCTURE NO. 016-2437
SHEET NO. S-77 OF S-83 SHEETS

F.A.I. RTE.	SECTION	COUNTY	TOTAL SHEETS	SHEET NO.
94	2012-060-BR	COOK	285	240

CONTRACT NO. 60V61

ILLINOIS FED. AID PROJECT

S:\1072\95_CADD\Structural\SN 0162437\CADD Sheets\0162437-6B12-077-FY14.dgn 12/7/2012 2:27:28 PM

Note:
* All dimensions along gutter line

2'-3 *	Typ. For Welded Steel Pipe - Piers 1 thru 6
2'-9 *	Typ. For Welded Steel Pipe - Piers 7 thru 13
2'-9 *	Typ. For C.I. B&S. Pipe Class 150 Piers 1 thru 6
3'-3 *	Typ. For C.I. B&S. Pipe Class 150 Piers 7 thru 13

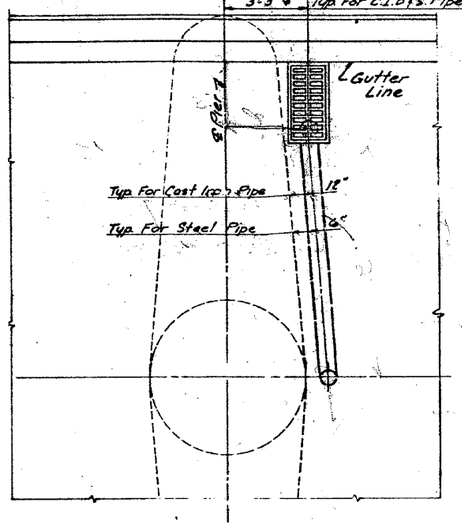

PLAN
SCUPPER LOCATION

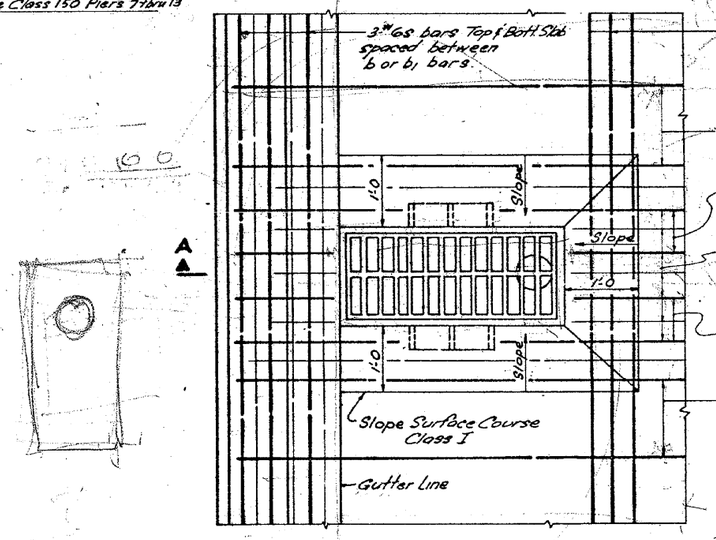

NOTE: Reinforcement bars at scuppers are billed with each slab unit.

DETAIL "A"
REINFORCEMENT PLAN
FOR TYPE "A" SCUPPER

LOCATION	A.	AA.	B	C	E	EE	F	G	H	J	K	TYPE	SLOPE PERFT
* ABUT. NO. 1, PIER 1 & 2	15"	35 5/8"	1 1/2"	6"	17 1/2"	37 5/8"	20"	2x6 1/2"	5/8"	8"	4"	A	x = 3/16"
PIER 4 THRU 13; & ABUT. NO. 2	15"	35 5/8"	1 1/2"	6"	17 1/2"	37 5/8"	18 1/2"	2x6 1/2"	5/8"	6 1/2"	4"	A	x = 9/16"

* Type A Scupper located at sta. 7+61.77 without downspout pipe, 6 inch.

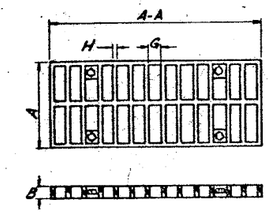

GRATE

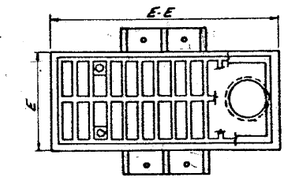

PLAN

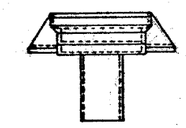

END VIEW

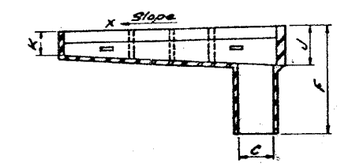

SECTION B-B

TYPE "A" SCUPPER

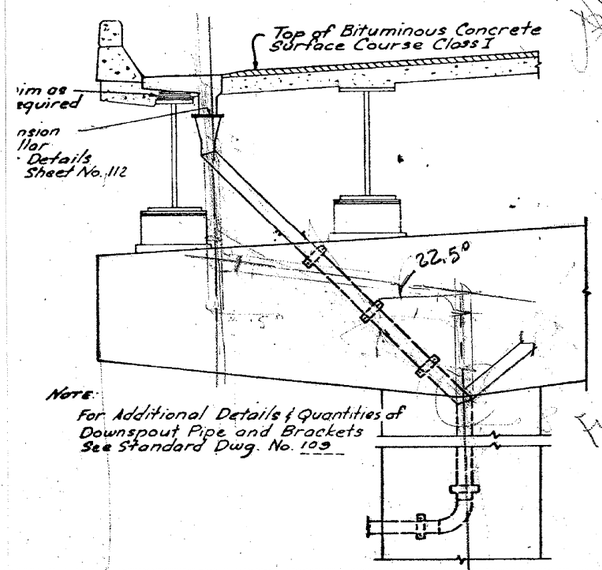

Note:
For Additional Details & Quantities of Downspout Pipe and Brackets See Standard Dwg. No. 109

SCUPPER AT PIER

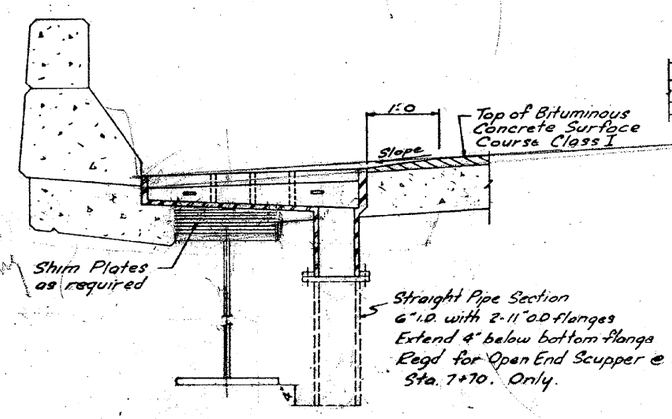

SECTION A-A
SCUPPER INSTALLATION
AT PIER

End of Slab (Typ.)	
2'-0	Abut. No. 1 Welded Steel Pipe
2'-6	Abut. No. 1 C.I. B&S Pipe
2'-3	Abut. No. 2 Welded Steel Pipe
2'-9	Abut. No. 2 C.I. B&S Pipe

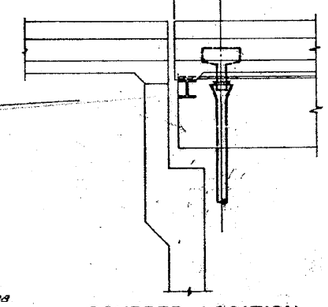

SCUPPER LOCATION
AT ABUTMENT
Abutment No. 1 Shown
Abutment No. 2 Similar

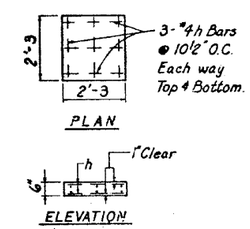

DETAIL OF SPLASH BLOCK

BILL OF MATERIAL FOR SPLASH BLOCK			
BAR	NO.	SIZE	LENGTH
h	12	#4	2'-0
REINF. BARS LBS.			16
CLASS X CONCR CU. YDS.			0.1

Note: Quantity shown is for one splash block. No. Reqd. 3.

NOTE:- For additional Details of Splash Block See Sheet # 109

REVISIONS		
DATE	BY	DESCRIPTION

DEPARTMENT OF HIGHWAYS
COOK COUNTY, ILLINOIS
GEORGE W. DUNNE, PRESIDENT BOARD OF COMMISSIONERS — SUPERINTENDENT OF HIGHWAYS

SCUPPER DETAILS
STONY ISLAND CONNECTOR TO FAI 94
RAMP Q STRUCTURE

KNOERLE, BENDER, STONE & ASSOCIATES INC.
CONSULTING ENGINEERS
CHICAGO, ILLINOIS

PROJECT EBU 246 (7)
SCALE
APPROVED L. A. Oblinger

APPROVED 4-11-72
CHIEF ENGINEER

F.A. Route No.	COUNTY HWY. Route No.	Sheet No.	Total Sheets	Drawing No.
122	174A	46	109	

BOWMAN, BARRETT & ASSOCIATES INC.
CONSULTING ENGINEERS
Chicago, Illinois
312.228.0100
www.bbandainc.com

USER NAME =	DESIGNED -	REVISED -	
	CHECKED - BAK	REVISED -	
PLOT SCALE =	DRAWN -	REVISED -	
PLOT DATE = 11/08/2012	CHECKED -	REVISED -	

STATE OF ILLINOIS
DEPARTMENT OF TRANSPORTATION

EXISTING PLANS (FOR INFORMATION ONLY)
STRUCTURE NO. 016-2437
SHEET NO. S-78 OF S-83 SHEETS

F.A.I. RTE.	SECTION	COUNTY	TOTAL SHEETS	SHEET NO.
94	2012-060-BR	COOK	285	241

CONTRACT NO. 60V61
ILLINOIS FED. AID PROJECT

S:\1072\005_CADD\Structural\SN 0162437\CADD Sheets\0162437-68J12-078-FY15.dgn 12/7/2012 2:27:25 PM

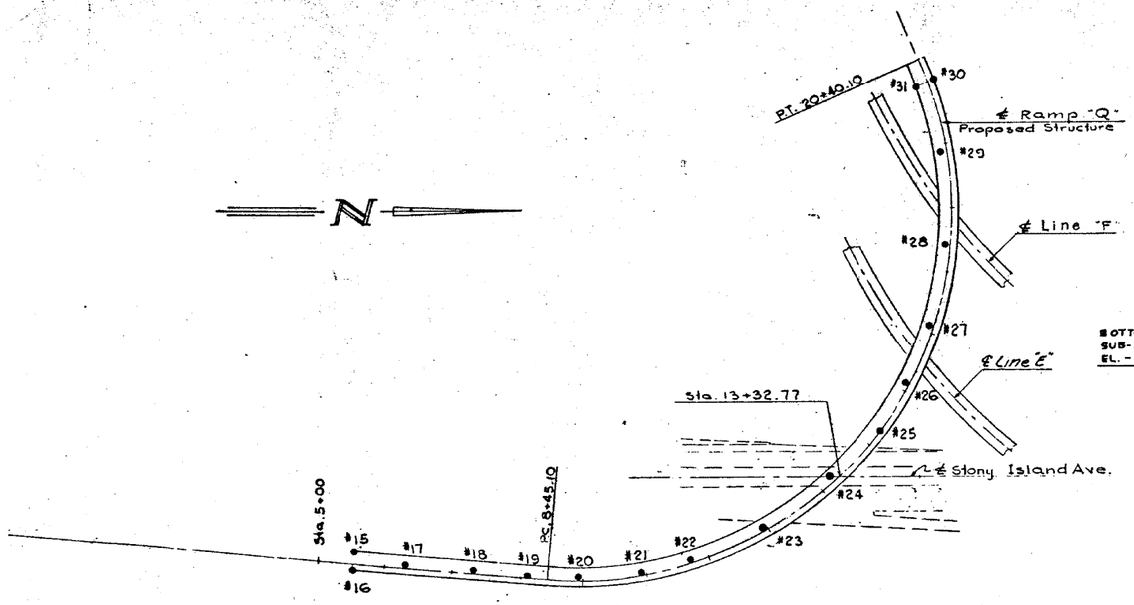

BORING LOCATION LINE "Q"

SCALE: 1" = 100'

See Sheet #7, #8 & #9

Boring No. 21 Sta. 9+92, 7' Left

GROUND SURFACE ELEVATION +4.54'

Description	N	Qu	W/C	Q'
BROWN SILT WITH SMALL TO MEDIUM GRAVEL FILL	17	---	11.5	
	8	---	17.4	6'0"
STIFF BROWN SILT WITH GREY CLAY, FINE-MEDIUM SAND & GRAVEL	8	---	19.1	9'0"
VERY STIFF GREY SILT WITH CLAY, FINE-MEDIUM SAND & GRAVEL	12	2.4	17.6	
	(STIFF) 12	1.9	18.1	
	13	3.3	17.1	
	23	3.3	17.7	19'0"
HARD GREY SILT WITH CLAY, FINE-MEDIUM SAND & GRAVEL	21	4.3	16.8	
	23	4.5	17.5	
	25	5.6	18.1	26'0"
HARD GREY SILT WITH LITTLE CLAY, FINE SAND & GRAVEL	26	6.2	12.8	
	28	7.4	12.5	
	30	7.3	12.7	
	25	7.7	15.0	
	30	7.8	14.3	37'8"

DRY = NO WL

BOTTOM OF SUB-PIER EL. - 23.07

Boring No. 22 Sta. 10+72, 7' Left

GROUND SURFACE ELEVATION +4.19'

Description	N	Qu	W/C	Q'
BROWN SANDY SILT WITH GREY CLAY FILL	15	---	13.7	
	8	---	19.8	
	10	3.7	17.5	8'3"
VERY STIFF GREY SILT WITH CLAY, FINE-MEDIUM SAND & GRAVEL	12	2.8	16.1	
	14	3.1	17.6	
	13	3.1	17.1	
	14	3.5	17.2	19'6"
HARD GREY SILT WITH CLAY, FINE TO MEDIUM SAND & GRAVEL	28	7.3	16.9	
	34	7.1	10.8	
	24	7.2	11.0	
	25	6.4	11.3	
	22	6.4	13.2	
	23	6.4	12.0	
	29	5.4	14.4	
	22	5.0	14.8	39'3"
STIFF GREY SANDY SILT (VERY STIFF)	17	1.8	16.4	
	35	2.1	13.8	43'0"
VERY STIFF TO HARD GREY SILT WITH CLAY, FINE-MEDIUM SAND & GRAVEL	22	3.4	13.2	
	22	3.3	14.2	
	21	3.9	14.2	
	25	5.6	14.2	
	26	6.2	15.2	55'0"

DRY = NO WL

BOTTOM OF SUB-PIER EL. -23.55

Boring No. 15 Sta. 5+50, 20' Left

GROUND SURFACE ELEVATION +3.18'

Description	N	Qu	W/C	Q'
RUBBLE FILL	21	---	7.4	
	14		17.8	4'6"
SEE NOTE A				6'0"
VERY STIFF (HARD) BROWN SILT, TRACE CLAY, SMALL-MEDIUM GRAVEL & SAND	16	4.1	15.4	
	15	3.4	15.7	
	17	3.6	17.9	14'0"
VERY STIFF GREY SILT, VERY LITTLE CLAY, SMALL-MEDIUM GRAVEL & SAND	25	3.5	16.8	
	27	3.5	16.0	19'6"
HARD GREY SILT WITH CLAY, SMALL TO MEDIUM GRAVEL, TRACE SAND	31	9.0	18.5	
	17	5.0	11.8	
	24	---	12.4	
	17	5.5	13.0	
	39	4.1	11.2	
	23	5.1	13.9	
	25	5.2	12.8	
	31	4.4	14.1	
	(VERY STIFF) 26	2.5	11.5	
	34	6.7	12.2	
	28	6.2	12.8	45'0"

BOTTOM OF SUB-PIER EL. - 29.71

Boring No. 16 Sta. 5+50, 6' Right

GROUND SURFACE ELEVATION +3.52'

Description	N	Qu	W/C	Q'
RUBBLE FILL	44	---	12.8	
	9	4.5	16.7	4'6"
VERY STIFF DARK BROWN CLAYEY SILT, TRACE ROOTS & FINE GRAVEL	13	3.0	21.5	
	15	2.5	16.4	11'0"
VERY STIFF BROWNISH GREY CLAYEY SILT, TRACE FINE GRAVEL & SAND	21	2.7	13.9	
	16	2.8	17.7	17'0"
HARD GREY CLAYEY SILT WITH FINE TO MEDIUM GRAVEL & SAND	28	4.2	11.9	
	37	4.5	10.8	
	40	7.1	10.8	
	37	7.1	11.5	
	44	7.7	12.3	
	32	5.7	12.5	
	32	4.9	13.5	
	35	5.7	13.5	
	37	4.3	13.0	
	37	2.9	12.3	MORE SANDY SILT & SAND
	33	1.0	12.5	
	44	0.9	15.2	
	41	7.6	12.2	
	39	8.4	10.2	50'6"

Boring No. 17 Sta. 6+30, 7' Left

GROUND SURFACE ELEVATION +3.81'

Description	N	Qu	W/C	Q'
RUBBLE FILL	9	---	17.2	
STIFF DARK BROWN SILT, TRACE ROOTS	16	---	28.2	3'6"
VERY STIFF BROWN SILT, LITTLE CLAY TR. GRAVEL & SAND	12	3.3	17.4	6'0"
VERY STIFF GREY SILT, LITTLE CLAY, SMALL TO MEDIUM GRAVEL & SAND	15	3.2	15.8	9'0"
	25	3.2	16.1	
	19	3.4	18.2	
	23	3.7	17.6	
	21	3.7	17.0	
	24	3.7	18.2	
	21	5.2	14.7	
	(HARD) 23	4.4	13.9	WL[2]
	25	4.5	14.6	
	23	3.6	15.3	
	28	3.7	14.6	
	24	3.7	12.4	39'6"
STIFF GREY SILTY CLAY	13	1.0	29.1	41'0"
HARD GREY SILT, VERY LITTLE CLAY, WITH SMALL TO MEDIUM GRAVEL, TRACE SAND	18	4.3	12.7	
	29	6.2	12.5	
	34	5.3	11.6	
	31	6.7	14.3	
	41	7.4	14.9	
	70	7.6	14.6	
	56	6.9	16.0	58'6"

(GAS NOTED)

BOTTOM OF SUB-PIER EL. - 21.04

Boring No. 18 Sta. 7+31, 7' Left

GROUND SURFACE ELEVATION +3.54'

Description	N	Qu	W/C	Q'
RUBBLE FILL	40	---	4.2	
	16		16.6	5'0"
SEE NOTE B				5'0"
VERY STIFF BROWNISH GREY SILT, LITTLE CLAY TRACE FINE GRAVEL & SAND	16	3.2	17.1	
	19	2.4	11.3	11'0"
(VERY STIFF) HARD GREY SILT, LITTLE CLAY, WITH FINE TO MEDIUM GRAVEL, TRACE SAND	21	2.4	16.0	
	26	4.6	12.8	
	35	7.3	10.3	
	36	8.7	13.6	
	36	4.9	13.1	
	25	5.3	12.9	
	38	5.3	12.2	
	36	4.1	14.8	
	30	4.4	13.9	
	38	8.6	9.5	
	39	8.5	12.3	
	38	7.6	11.7	
	46	8.8	12.3	
	37	7.8	12.7	
	47	5.7	13.3	
	47	8.8	11.3	50'6"

BOTTOM OF SUB-PIER EL. - 25.43

Boring No. 19 Sta. 8+11, 7' Left

GROUND SURFACE ELEVATION +4.35'

Description	N	Qu	W/C	Q'
BROWN SILTY CLAY	25	---	14.5	2'9"
CONCRETE				5'0"
MEDIUM STIFF BROWN SILTY WITH CLAY, FINE-MEDIUM SAND & GRAVEL	8	---	19.2	8'6"
VERY STIFF TO HARD GREY SILT WITH CLAY, FINE-MEDIUM SAND & GRAVEL	13	2.6	17.3	
	11	2.1	17.7	
	16	3.0	14.5	
	22	4.5	14.6	
	24	5.0	17.7	21'0"
HARD GREY SANDY SILT WITH CLAY & SMALL GRAVEL	36	5.5	10.8	
	24	7.6	11.1	26'0"
HARD GREY SILT WITH CLAY, FINE TO MEDIUM SAND & GRAVEL	30	6.8	11.2	
	26	7.3	12.7	
	30	8.8	11.4	
	26	7.0	12.1	
	28	6.4	12.1	39'0"
SEE NOTE C	26	---	6.9	40'0"

BOTTOM OF SUB-PIER EL. - 25.73

Boring No. 20 Sta. 8+91, 7' Left

GROUND SURFACE ELEVATION +4.31'

Description	N	Qu	W/C	Q'
BROWN SANDY SILT & CLAY FILL	10	---	13.8	
	8	---	10.3	
	10	---	16.7	8'6"
VERY STIFF GREY SILT WITH CLAY, FINE-MEDIUM SAND & GRAVEL	11	2.0	17.5	
	15	3.0	14.9	
	15	2.6	18.3	
	17	3.9	16.7	
	(HARD) 24	4.3	18.1	
	36	5.0	14.1	21'9"
HARD GREY SILT WITH CLAY, FINE TO MEDIUM SAND & GRAVEL	24	8.1	11.6	
	24	7.1	11.9	
	25	8.5	12.4	
	25	7.0	13.4	
	25	8.4	13.3	
	25	6.3	12.8	37'8"

GENERAL NOTES:

Classifications are made from visual inspection.

Water Levels (WL). Figure indicates time of reading (hours) after completion of boring. Water levels indicated are those observed when borings were made, or as noted. Porosity of the soil strata, variations of rainfall, site topography, etc., may cause changes in these levels.

Figures in right hand column indicate number of blows required to drive 2" O.D. sampling pipe one foot, using a 140 lb. weight falling 30 inches.

INDICATES ROCK CORE DRILLING

A = AMOUNT OF ROCK CORE RECOVERED (INCHES)

B = DEPTH OF ROCK CORE DRILLED (INCHES)

WL[A] = WATER ENCOUNTERED WHILE ADVANCING BORING

N = STANDARD PENETRATION TEST - NUMBER OF BLOWS REQUIRED TO DRIVE 2" O.D. SPLIT SPOON SAMPLER 1' USING 140# WEIGHT FALLING 30".

Qu = UNCONFINED COMPRESSIVE STRENGTH (TONS PER SQUARE FOOT)

W/C = WATER CONTENT - PERCENTAGE OF OVEN DRY WEIGHT (%)

NOTE A: STIFF DARK BROWN SILT, TRACE CLAY & SAND.

NOTE B: STIFF DARK BROWN SILT, LITTLE CLAY, TRACE ROOTS

NOTE C: MEDIUM DENSE GREY SILT WITH SAND, SOME CLAY (ROCK FRAGMENT & GAS WAS NOTED @ 39'0". GAS WAS LIT & IT BURNED FOR 52 HOURS)

NOTE D: HARD GREY SILTY CLAY, SOME SAND & GRAVEL

NOTE E: VERY DENSE GREY VERY FINE SAND WITH SILT.

The Cook County Highway Department has acquired for its own use certain information relating to soil condition to be encountered along the route of the work. The Contractor will be permitted to see and examine this information for whatever value he considers it worth. Any additional borings deemed necessary by the contractor shall be made at his own expense, and delays or extra expenditures in the construction due to different types of soil encountered, shall not be paid for directly but shall be considered as incidental to the contract. *See special provisions regarding Sub Pier (Soil Bearing)*

DEPARTMENT OF HIGHWAYS
COOK COUNTY, ILLINOIS

GEORGE W. DUNNE
PRESIDENT BOARD OF COMMISSIONERS

SUPERINTENDENT OF HIGHWAYS

BORING LOGS

STONY ISLAND CONNECTOR TO FAI 94
RAMP Q STRUCTURE

HOEGERLE, BENDER, STONE & ASSOCIATES INC.
CONSULTING ENGINEERS
CHICAGO, ILLINOIS

PROJECT EBU 246(2)
SCALE
APPROVED

APPROVED
CHIEF ENGINEER

F.A. Route No.	COUNTY HWY. Route No.	Sheet No.	Total Sheets	Drawing No.
122	174 A	51	109	

BOWMAN, BARRETT & ASSOCIATES INC.
CONSULTING ENGINEERS
Chicago, Illinois
312.228.0100
www.bbandainc.com

USER NAME =	DESIGNED -	REVISED -	
	CHECKED - BAK	REVISED -	
PLOT SCALE =	DRAWN -	REVISED -	
PLOT DATE = 11/08/2012	CHECKED -	REVISED -	

STATE OF ILLINOIS
DEPARTMENT OF TRANSPORTATION

EXISTING PLANS (FOR INFORMATION ONLY)
STRUCTURE NO. 016-2437

SHEET NO. S-79 OF S-83 SHEETS

F.A.I. RTE.	SECTION	COUNTY	TOTAL SHEETS	SHEET NO.
94	2012-060-BR	COOK	285	242

CONTRACT NO. 60V61

ILLINOIS FED. AID PROJECT

S:\1072\105_CADD\Structural\SN 0162437\CADD Sheets\0162437-GBJ12-079-FY16.dgn 12/7/2012 2:27:29 PM

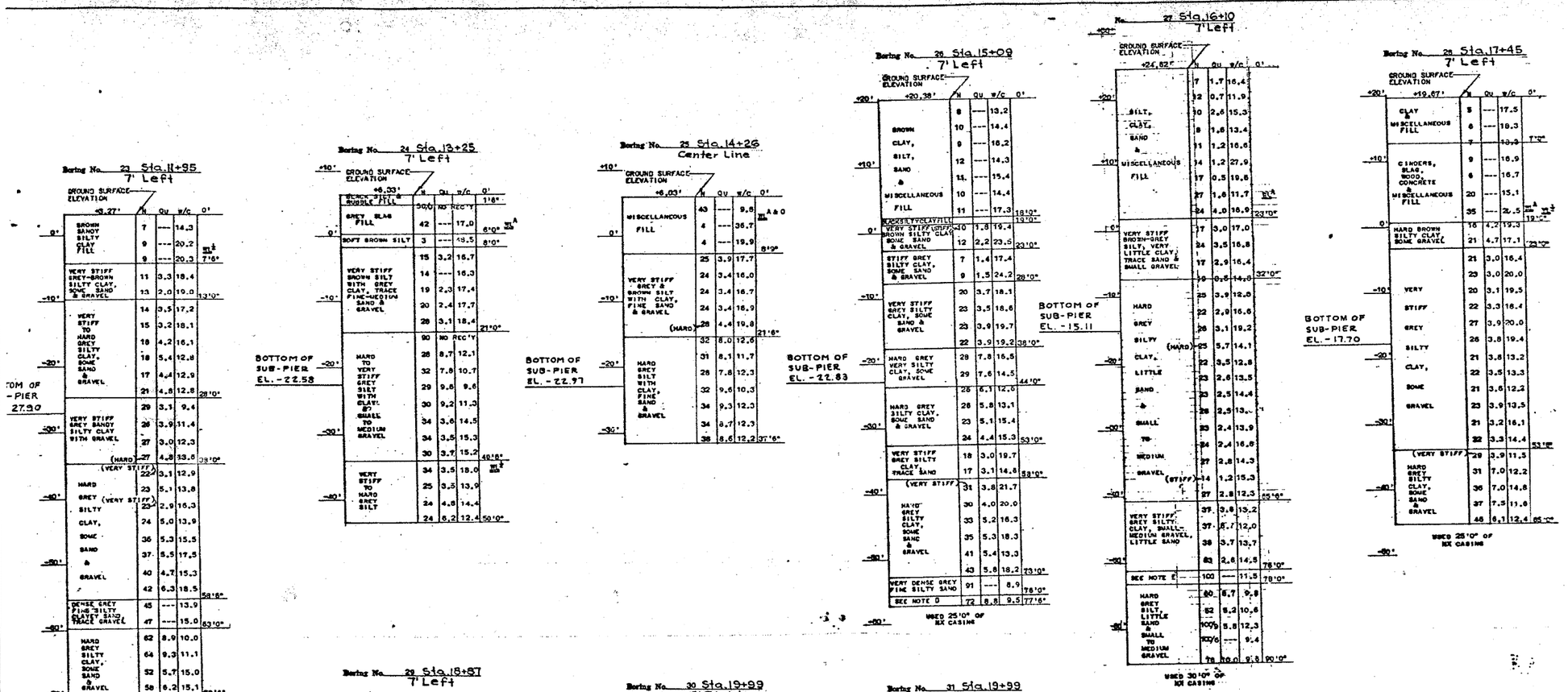

NOTE

For Notes See Sheet No. 51.

DEPARTMENT OF HIGHWAYS
COOK COUNTY, ILLINOIS

GEORGE W. DUNNE
PRESIDENT BOARD OF COMMISSIONERS

SUPERINTENDENT OF HIGHWAYS

BORING LOGS

STONY ISLAND CONNECTOR TO FAI 94
RAMP Q STRUCTURE

KINDERLE, BENDER, STONE & ASSOCIATES INC.
CONSULTING ENGINEERS
CHICAGO, ILLINOIS

PROJECT EBU246(72)
SCALE
APPROVED

APPROVED 4-11-72
CHIEF ENGINEER

F.A. Route No.	COUNTY HWY. Route No.	Sheet No.	Total Sheets	Drawing No.
122	174A	52	109	

BOWMAN, BARRETT & ASSOCIATES INC.
CONSULTING ENGINEERS
Chicago, Illinois
312.228.0100
www.bbandainc.com

USER NAME =	DESIGNED -	REVISED -
	CHECKED - BAK	REVISED -
PLOT SCALE =	DRAWN -	REVISED -
PLOT DATE = 11/08/2012	CHECKED -	REVISED -

STATE OF ILLINOIS
DEPARTMENT OF TRANSPORTATION

EXISTING PLANS (FOR INFORMATION ONLY)
STRUCTURE NO. 016-2437

SHEET NO. S-80 OF S-83 SHEETS

F.A.I. RTE.	SECTION	COUNTY	TOTAL SHEETS	SHEET NO.
94	2012-060-BR	COOK	285	243

CONTRACT NO. 60V61

ILLINOIS FED. AID PROJECT

S:\0172\05_CADD\Structural\SN 0162437-60J12-R98-FY17.dgn 12/7/2012 2:27:33 PM

County Highway	Fiscal Year	Sheet No.	Total Sheets
174 A	1972	26	27

Section 174 A-0101, 27 C.R.

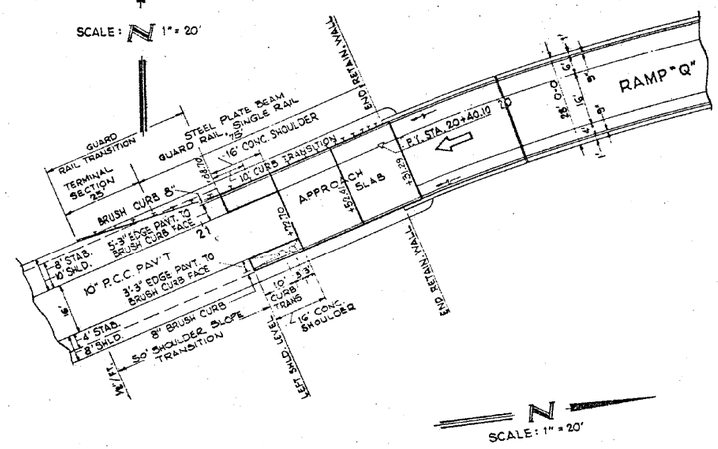

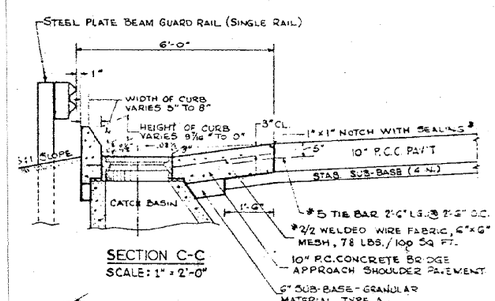

SECTION C-C
SCALE: 1" = 2'-0"

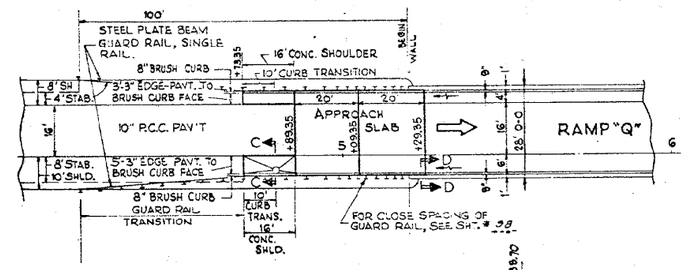

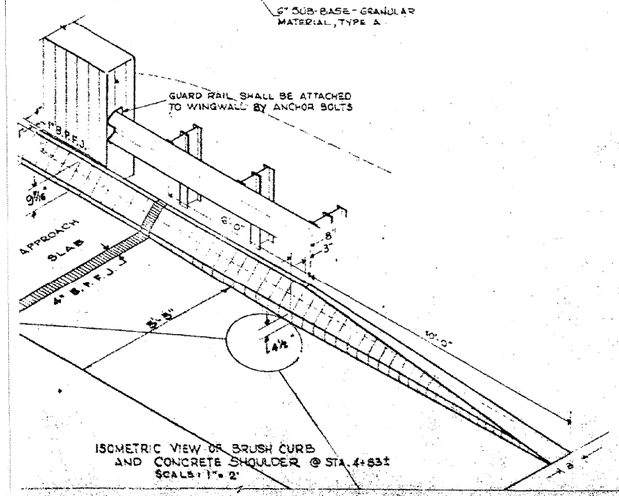

ISOMETRIC VIEW OF BRUSH CURB AND CONCRETE SHOULDER @ STA. 4+83±
SCALE: 1" = 2'

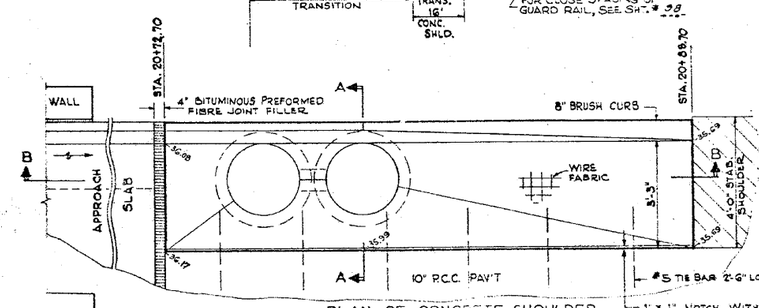

PLAN OF CONCRETE SHOULDER
SCALE: 1" = 2'-0"

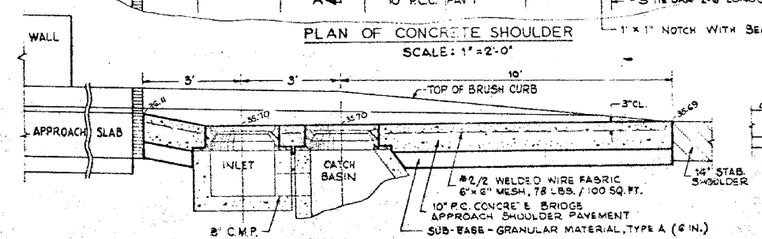

SECTION B-B

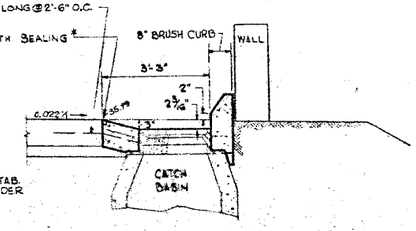

SECTION A-A

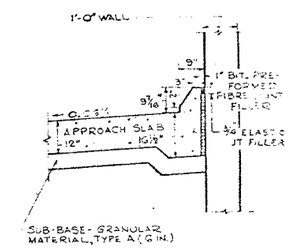

SECTION D-D
SCALE: 1" = 2'-0"

GENERAL NOTES

The concrete shoulder pavement will be measured in square yards and paid for as P.C. CONCRETE BRIDGE APPROACH SHOULDER PAVEMENT which shall include the cost of tie bars, reinforcement, joint fillers, and sealing.

Catch Basins shall be paid for in accordance with Section 612 of the Standard Specifications.

The cost of the Brush Curb, when adjacent to the concrete shoulder and approach slab, shall not be paid for separately but shall be included in contract unit price per square yard for P.C. CONCRETE BRIDGE APPROACH SHOULDER PAVEMENT and P.C. CONCRETE PAVEMENT (16½" - 12" - 16½") respectively.

Sub-Base under the Concrete Shoulder, shall be SUB BASE GRANULAR MATERIAL TYPE A (6 In.).

The face of the Brush Curb shall be a continuation of the face of the curb on the structure.

* Where indicated, joints shall be sealed with two component, non-staining, gray, sealing compound with polysulfide liquid polymers, gun grade with primers.

The Face of the Steel Plate Beam Guard Rail shall have a 46'-48' transition from the back of the Brush Curb to the edge of shoulder.

The cost of the ¼ in. Preformed Expansion Joint Filler is to be included in the contract unit price per square yard for P.C. CONCRETE PAVEMENT (16½"-12"-16½").

Scales As Noted

COUNTY OF COOK
DEPARTMENT OF HIGHWAYS

P.C. CONCRETE BRIDGE APPROACH SHOULDER PAVEMENT & BRUSH CURB

COMPUTED J.L.N.
DRAWN N.J.V.
CHECKED J.J.N.

S:\0172\05_CADD\Structural\SN 0162437\CADD Sheets\0162437-60J12-081-FY18.dgn 12/7/2012 2:27:37 PM

BOWMAN, BARRETT & ASSOCIATES INC.
CONSULTING ENGINEERS
Chicago, Illinois
312.228.0100
www.bbandainc.com

USER NAME =	DESIGNED -	REVISED -
	CHECKED - BAK	REVISED -
PLOT SCALE =	DRAWN -	REVISED -
PLOT DATE = 11/08/2012	CHECKED -	REVISED -

STATE OF ILLINOIS
DEPARTMENT OF TRANSPORTATION

EXISTING PLANS (FOR INFORMATION ONLY)
STRUCTURE NO. 016-2437

SHEET NO. S-81 OF S-83 SHEETS

F.A.I. RTE.	SECTION	COUNTY	TOTAL SHEETS	SHEET NO.
94	2012-060-BR	COOK	285	244

CONTRACT NO. 60V61

ILLINOIS FED. AID PROJECT

BILL OF MATERIAL E. APPR.				
BAR	NO	SIZE	LENGTH	SHAPE
a1	66	#5	25'-7	
b1	80	#9	19'-6	
b2	20	#9	21'-6	
p	8	#8	25'-6	
s	20	#4	4'-5	

BILL OF MATERIAL W. APPR.				
BAR	NO	SIZE	LENGTH	SHAPE
a1	69	#5	25'-7	
b1	80	#9	19'-6	
b2	20	#9	21'-6	
p	8	#8	25'-6	
s	20	#4	4'-5	

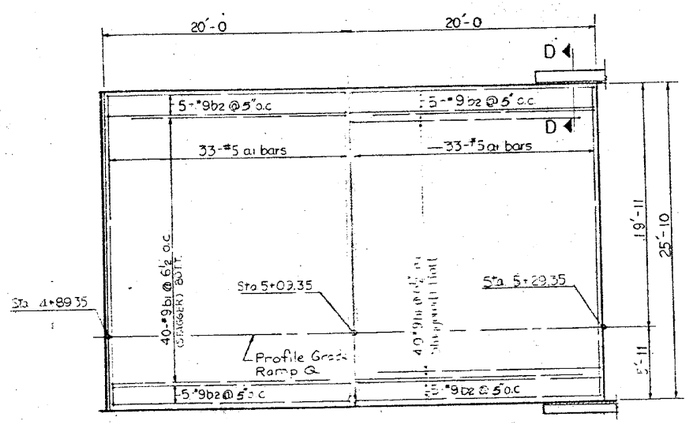

EAST APPROACH SLAB

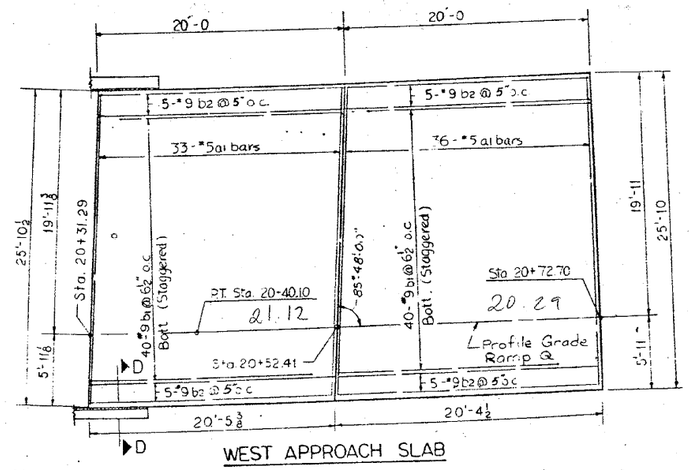

WEST APPROACH SLAB

PLAN

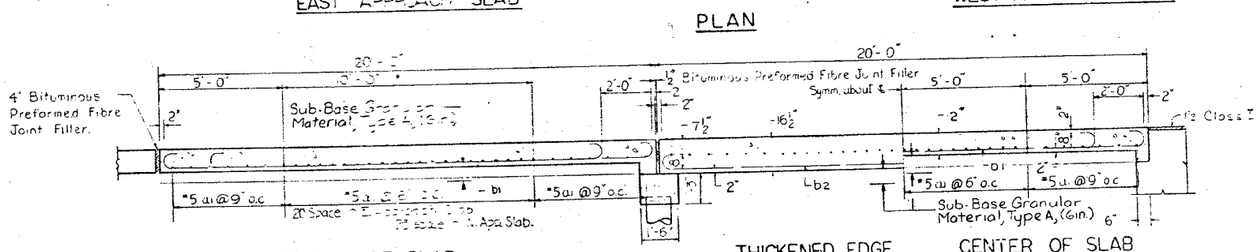

CENTER OF SLAB

THICKENED EDGE OF SLAB

CENTER OF SLAB

LONGITUDINAL SECTION

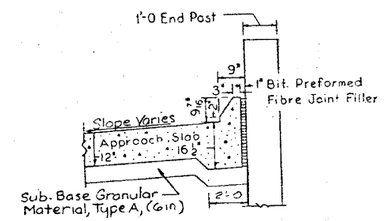

SECTION D-D

(Typical at End Post)

b1	11"	17'-8	11"
b2	11"	19'-8	11"

BAR b1 & b2

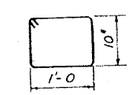

BAR S

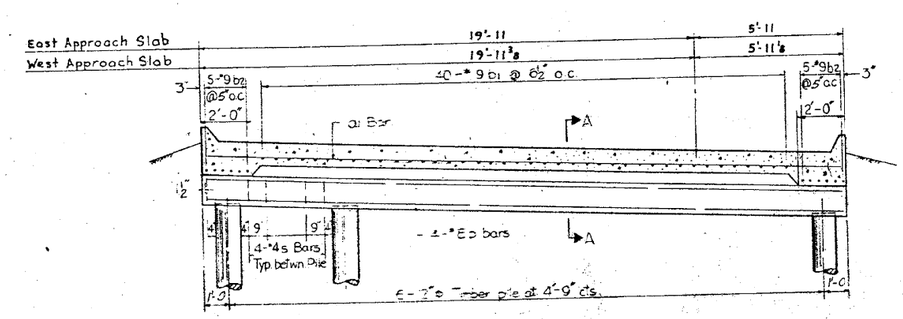

SECTION THRU OF CONCRETE SLAB & CAP

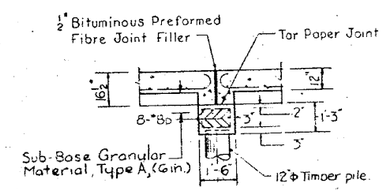

SECTION A A

NOTE:

For P.C. Concrete Bridge Approach Shoulder Pavement Details See Sht. No. 66

For Cross Slope Transition Details See Sht. No. 65

Quantities shown on this sheet are included in Bill of Material on Sht. No. 10

The Concrete cap will paid for at the Contract unit price for Class X Concrete.

** FURNISHING CREOSOTED PILES—12" DIA. 20.1' TO 38.0' LONG ----156 LIN.FT.

* FURNISHING CREOSOTED PILES—12" DIA UP TO 20.0' LONG ---48 LIN.FT.

ESTIMATED QUANTITIES E. APP.		
ITEM	UNIT	TOTAL
REINFORCEMENT BARS	L.B.	9269
P.C. CONC. PAVM'T (16"x12"x16")	S.Y.	114.7
* FURN'G CREOSOTED PILES	Lin.Ft.	48
DRIVING TIMBER PILES	Lin.Ft.	48
SUB-BASE GRAN. MAT. TYPE A	S.Y.	111
PROTECTIVE COAT	S.Y.	120

ESTIMATED QUANTITIES W. APP.		
ITEM	UNIT	TOTAL
REINFORCEMENT BARS	L.B.	9211
P.C. CONC. PAVM'T (16"x12"x16")	S.Y.	115.8
FURN'G CREOSOTED PILES	Lin. Ft.	156 **
DRIVING TIMBER PILES	Lin. Ft.	156
SUB-BASE GRAN. MAT. TYPE A	S.Y.	112
PROTECTIVE COAT	S.Y.	121

REVISIONS		
DATE	BY	DESCRIPTION

DEPARTMENT OF HIGHWAYS
COOK COUNTY, ILLINOIS

GEORGE W. DUNNE
PRESIDENT BOARD OF COMMISSIONERS

DEPARTMENT OF HIGHWAYS

APPROACH SLAB PLAN AT ABUT. NO. 1 & 2

STONY ISLAND CONNECTOR TO FAI 94
RAMP Q STRUCTURE

KNOERLE, BENDER, STONE & ASSOCIATES INC.
CONSULTING ENGINEERS
CHICAGO ILLINOIS

PROJECT EBU 246 (7)
SCALE
APPROVED

APPROVED 4-11-72
CHIEF ENGINEER

F.A. Route No.	COUNTY HWY Route No.	Sheet No.	Total Sheets	Drawing No.
122	174A	67	109	

BOWMAN, BARRETT & ASSOCIATES INC.
CONSULTING ENGINEERS
Chicago, Illinois
312.228.0100
www.bbandainc.com

USER NAME =	DESIGNED -	REVISED -
	CHECKED - BAK	REVISED -
PLOT SCALE =	DRAWN -	REVISED -
PLOT DATE = 11/08/2012	CHECKED -	REVISED -

STATE OF ILLINOIS
DEPARTMENT OF TRANSPORTATION

EXISTING PLANS (FOR INFORMATION ONLY)
STRUCTURE NO. 016-2437

SHEET NO. S-82 OF S-83 SHEETS

F.A.I. RTE.	SECTION	COUNTY	TOTAL SHEETS	SHEET NO.
94	2012-060-BR	COOK	285	245

CONTRACT NO. 60V61

ILLINOIS FED. AID PROJECT

S:\1072\005_CADD\Structural\SN 0162437\CADD Sheets\0162437-GBJ12-082-FY19.dgn 12/7/2012 2:27:41 PM

STATE OF ILLINOIS
DEPARTMENT OF TRANSPORTATION

ROUTE NO.	SECTION	COUNTY	TOTAL SHEETS	SHEET NO.
		Cook	17	7
FED. ROAD DIST. NO. 2		ILLINOIS	FED. AID PROJECT-	

SHEET NO. 2
5 SHEETS

Contract Number: 62870

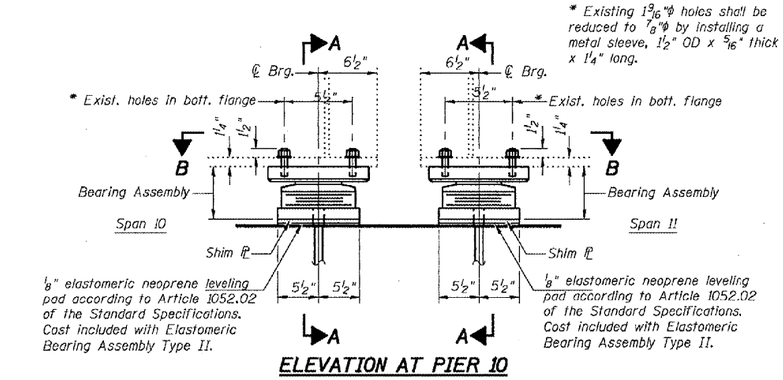

ELEVATION AT PIER 10

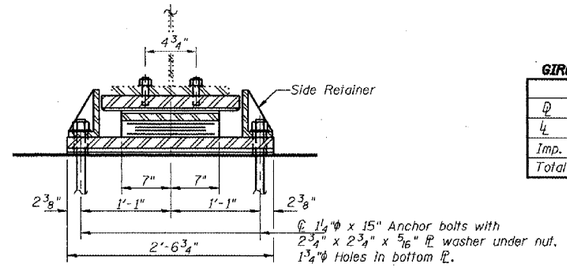

SECTION A-A

TYPE II ELASTOMERIC EXP. BRG.

GIRDER REACTIONS AT PIER 10

		S. Brg.	N. Brg.
D	(k)	49.3	49.7
L	(k)	40.8	41.9
Imp.	(k)	9.7	9.3
Total	(k)	99.8	100.9

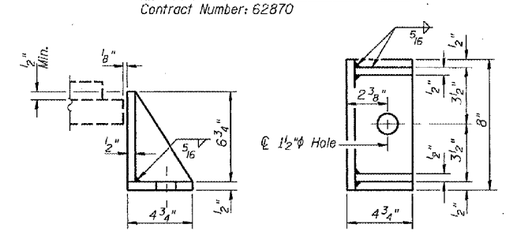

SIDE RETAINER

Equivalent rolled angle with stiffeners will be allowed in lieu of welded plates.

Notes:
New side retainers, shim ℙs, connection bolts and anchor bolts are included in Furnishing and Erecting Structural Steel.
See sheet 3 of 5 for anchor bolt installation.
Prior to ordering any material, the contractor shall verify, in the field, all bearing height and shim thickness dimensions.
Min. jack capacity = 75 Tons.

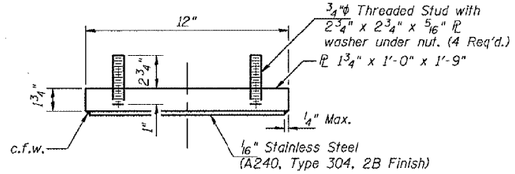

TOP BEARING ASSEMBLY

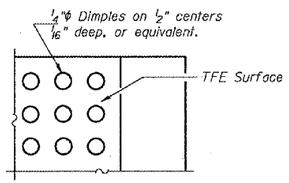

PLAN-TFE SURFACE

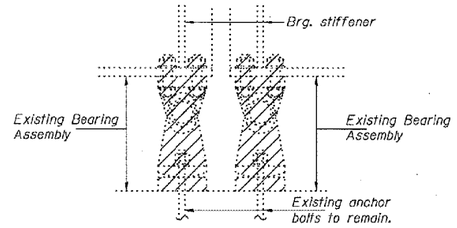

EXISTING BEARING REMOVAL DETAIL

Cost included with Jacking and Cribbing.

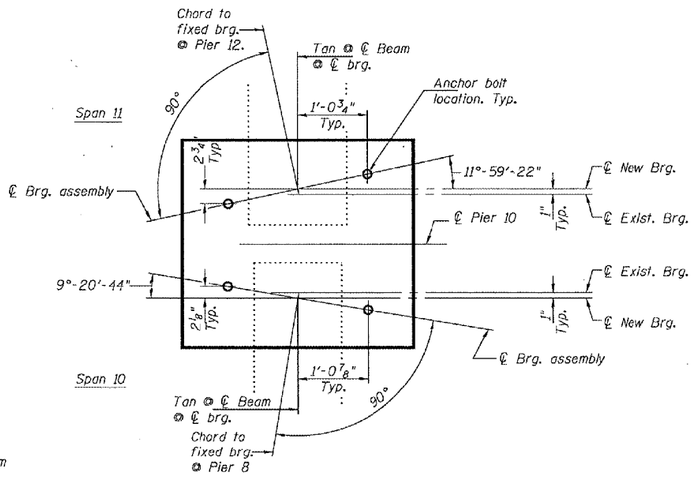

BEARING ORIENTATION

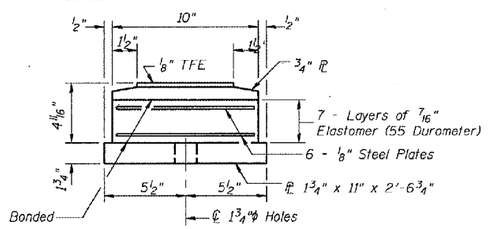

BOTTOM BEARING ASSEMBLY

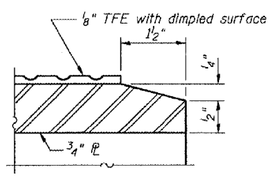

SECTION THRU TFE

Notes:
The 1/8" TFE sheet shall be bonded directly to the top steel plate with a two-component, medium viscosity epoxy resin, conforming to the requirements of the Federal Specification MMM-A-134, Type I. The bond agent shall be applied on the full area of the contact surfaces.

Bonding of 1/8" TFE sheet during vulcanizing process will be permitted provided the process and method of adjusting assembly height is approved by the Engineer.

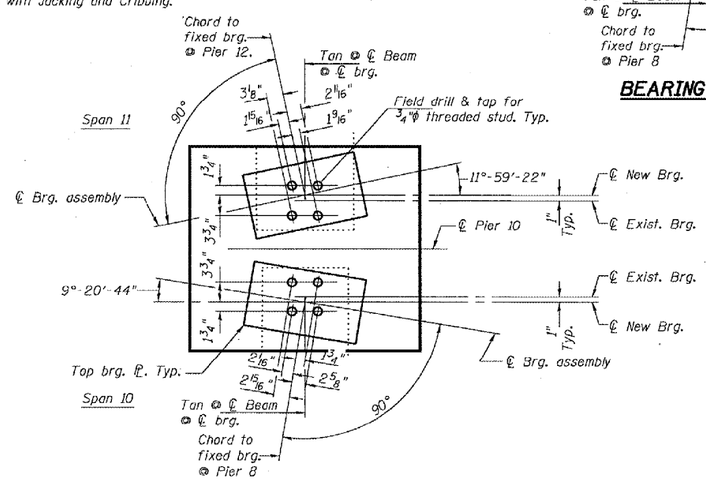

VIEW B-B

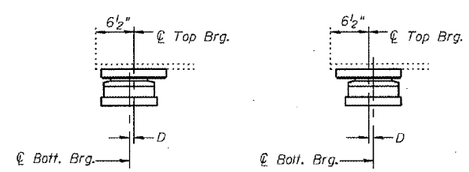

BELOW 50°F. (Move bott. brg. away from fixed brg.)

ABOVE 50°F. (Move bott. brg. toward fixed brg.)

SETTING ANCHOR BOLTS AT EXP. BRG.

D=1/8" per each 100' of expansion for every 15° temp. change from the normal temp. of 50°F.

BILL OF MATERIAL

Item	Unit	Total
Elastomeric Bearing Assembly Type II	Each	8
Jacking and Cribbing	LS	1
Furnishing and Erecting Structural Steel.	Lbs.	610

BEARING DETAILS
LOC 2: STONEY ISLAND CONNECTOR
TO FAI 94 RAMP Q STRUCTURE
COOK COUNTY
SN 016-2437

DESIGNED	JSB	
CHECKED	ATH	
DRAWN	baliva	
CHECKED	JSB	ATH

I-2-E2 9-1-03

MARCH 20, 2005
EXAMINED John A. Morris ENGINEER OF STRUCTURAL SERVICES
PASSED Ralph E. Anderson ENGINEER OF BRIDGES AND STRUCTURES

...\projects\dab00036\0162437.dgn 3/21/2005 8:05:08 AM

S:\1072\05_CADD\Structural\SN 0162437-60J12-083-FY28.dgn 12/7/2012 2:27:46 PM

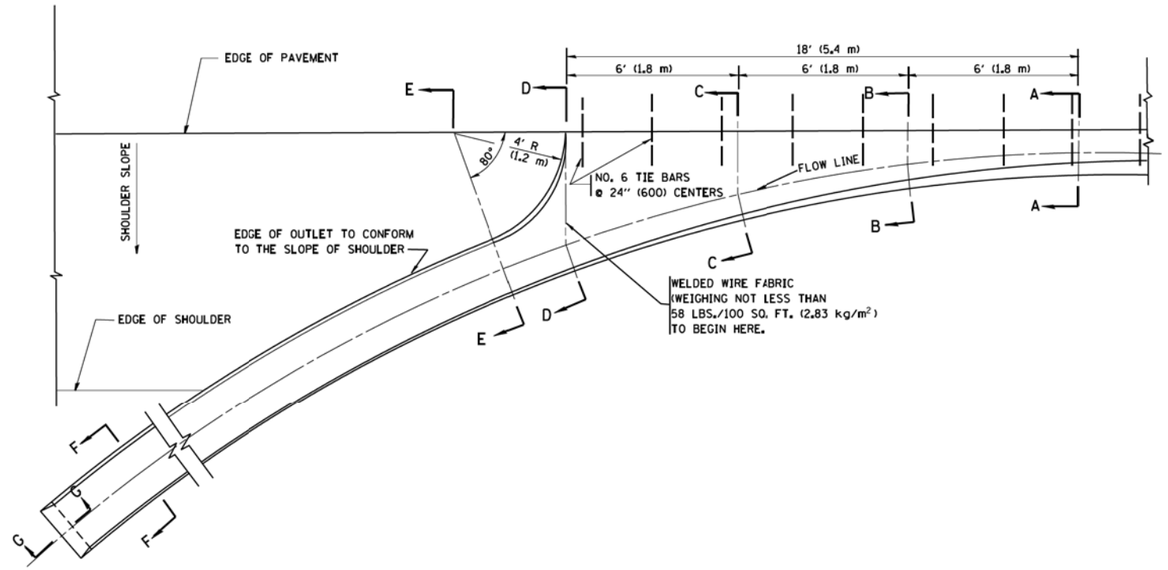

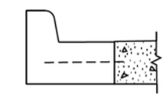

A-A *

* DIMENSIONS OF THE CURB & GUTTER AT SECTION A-A ARE SHOWN ON STATE STANDARD 606001.
FOR DETAILS OF OUTLET FOR CONCRETE CURB & GUTTER, TYPE B-6.24 (B-15.60) SEE STATE STANDARD 606006.

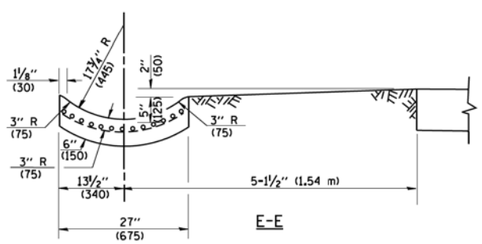

E-E

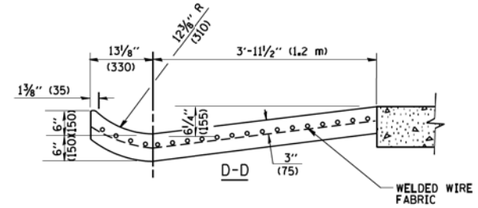

D-D

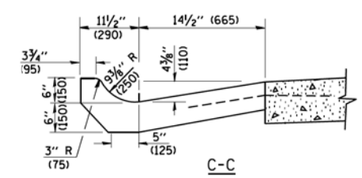

C-C

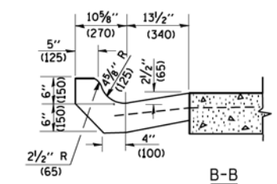

B-B

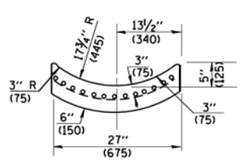

F-F

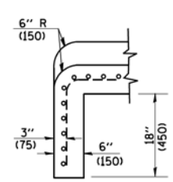

G-G

GENERAL NOTES

GUTTER OUTLET SHALL BE TIED TO THE PAVEMENT IN ACCORDANCE WITH DETAILS FOR LONGITUDINAL CONSTRUCTION JOINT SHOWN ON STANDARD 420001.

TIE BARS SHALL BE NO. 20 (NO.6) AT 24" (600) CENTERS UNLESS OTHERWISE SHOWN.

IF THE AVERAGE GRADE OF PAVEMENT FOR THE DISTANCE FROM SECTION A-A TO D-D EXCEEDS 2%, THIS DISTANCE SHALL BE INCREASED 6' (1.8 m) FOR EACH 1% INCREASE IN GRADE.

QUANTITIES

FOR SECTION A-A TO E-E AND CURTAIN WALL=
1.25 CU. YDS. (0.96 m^3) CLASS SI CONCRETE (OUTLET) FOR 9" (225) PAV'T.
1.27 CU. YDS. (0.96 m^3) CLASS SI CONCRETE (OUTLET) FOR 10" (250) PAV'T.
FOR SECTION F-F=
0.045 CU. YDS. (0.03 m^3) CLASS SI CONCRETE PER ft. (m).

ALL DIMENSIONS ARE IN INCHES (MILLIMETERS) UNLESS OTHERWISE SHOWN.

FILE NAME = W:\diststd\22x34\bd03.dgn	USER NAME = geglianobt	DESIGNED - M. DE YONG	REVISED - R. SHAH 09-09-94	STATE OF ILLINOIS DEPARTMENT OF TRANSPORTATION	OUTLET FOR CONCRETE CURB AND GUTER			F.A.I. RTE.	SECTION	COUNTY	TOTAL SHEETS / SHEET NO.
		DRAWN -	REVISED - R. SHAH 10-25-94					94	2012-060-BR	COOK	285 / 247
	PLOT SCALE = 50.0000 ' / IN.	CHECKED -	REVISED - E. GOMEZ 12-21-00					BD600-01	(BD-03)	CONTRACT NO. 60V61	
	PLOT DATE = 1/4/2008	DATE - 08-04-86	REVISED -		SCALE: NONE	SHEET NO. 1 OF 1 SHEETS	STA. TO STA.	FED. ROAD DIST. NO. 1	ILLINOIS	FED. AID PROJECT	

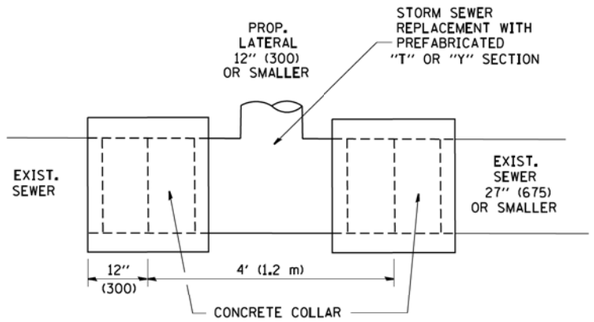

DETAIL "A"

LATERAL CONNECTION TO EXISTING SEWER
OF 27" (675) OR SMALLER

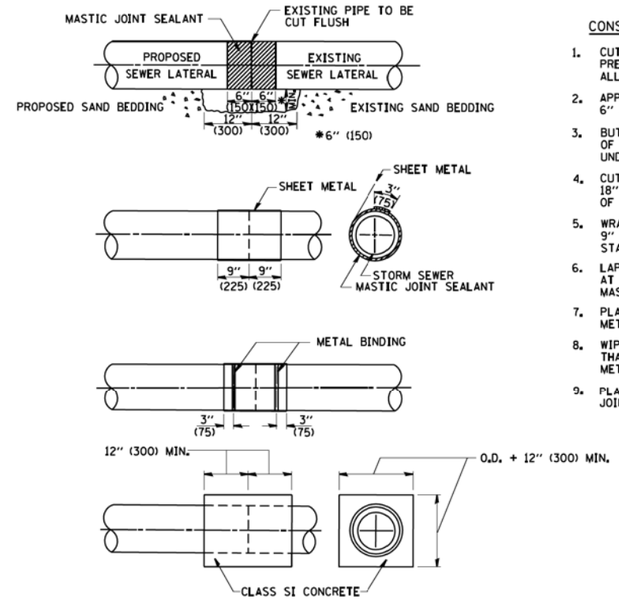

DETAIL "B"

CLASS SI CONCRETE COLLAR

CONSTRUCTION SEQUENCE

1. CUT THE EXISTING END OF THE PIPE SO AS TO PRESENT A FLUSH BUTT JOINT. BRUSH AND CLEAN ALL PIPES.
2. APPLY THE MASTIC JOINT SEALANT TO THE FIRST 6" (150) OF EACH PIPE.
3. BUTT THE PIPES TOGETHER LEAVING A MINIMUM OF 12' x 6' (300 x 150) DEEP EXCAVATION UNDER AND AROUND EACH PIPE END.
4. CUT A PIECE OF SHEET METAL GAGE NO. 19 1.1 (0.0418) 18" (450) WIDE BY THE OUTSIDE CIRCUMFERANCE OF THE PIPE PLUS 3" (75) LONG.
5. WRAP THE SHEET METAL AROUND THE PIPES, 9" (225) ON EACH SIDE OF THE JOINT, STARTING AT THE TOP OF THE PIPE.
6. LAP THE SHEET METAL AT LEAST 3" (75) AT THE TOP OF THE PIPE AND PLACE THE MASTIC JOINT SEALANT BETWEEN THE LAP.
7. PLACE TWO METAL BANDS AROUND THE SHEET METAL AND TIGHTEN.
8. WIPE OFF ANY EXCESS MASTIC JOINT SEALANT THAT OOZES OUT FROM BETWEEN THE SHEET METAL AND THE PIPES.
9. PLACE CLASS SI CONCRETE AROUND THE JOINT.

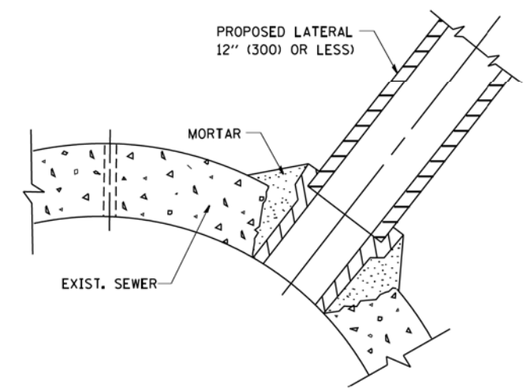

DETAIL "C"

PROPOSED LATERAL
CONNECTION TO EXISTING SEWER
OF 30" (750) OR LARGER

NOTES

MATERIAL

MATERIAL USED FOR THE TEE OR WYE SECTION SHALL BE COMPATIBLE WITH THE EXISTING STORM SEWER OR THE PROPOSED STORM SEWER.

CONSTRUCTION METHODS

I. THIS WORK SHALL BE CONSTRUCTED IN CONFORMANCE WITH THE APPLICABLE PORTIONS OF SECTION 550 OF THE STANDARD SPECIFICATIONS.

II. CONNECTION TO AN EXISTING STORM SEWER SHALL BE BY EITHER OF THE FOLLOWING METHODS:

A) PROPOSED STORM SEWER CONNECTION TO EXISTING SEWER OF 27" (675) OR SMALLER SEE DETAIL "A" AND "B".

B) PROPOSED STORM SEWER CONNECTION TO EXISTING SEWER OF 30" (750) OR LARGER SEE DETAIL "C".

IF THE EXISTING SEWER PIPE IS CRACKED, BROKEN OR OTHERWISE DAMAGED BY THE CONTRACTOR IN MAKING THE CIRCULAR OPENING, THE CONTRACTOR SHALL REPLACE THAT SECTION OF PIPE WITH PIPE EQUAL AND SIMILAR IN ALL RESPECTS TO THE PIPE IN THE EXISTING SEWER, IN A CAREFUL WORKMANLIKE MANNER, WITHOUT EXTRA COMPENSATION.

GENERAL

CARE MUST BE TAKEN TO PREVENT DEBRIS FROM ENTERING THE SEWER. ALL DEBRIS WHICH ENTERS THE SEWER MUST BE REMOVED. THE SEWER MUST BE LEFT CLEAN AND UNOBSTRUCTED UPON COMPLETION OF THE CONTRACT.

CARE MUST BE TAKEN TO PREVENT ANY PART OF THE NEW PIPE CONNECTION FROM PROJECTING INTO THE EXISTING SEWER.

BASIS OF PAYMENT

TEE OR WYE CONNECTIONS SHALL BE PAID FOR AT THE CONTRACT UNIT PRICE EACH FOR STORM SEWER TEE OR WYE OF THE TYPE AND SIZE SPECIFIED IN THE PLANS, THIS PRICE SHALL INCLUDE ALL EXCAVATION OF THE TRENCH, REMOVAL OF THE EXISTING STORM SEWER, FURNISHING AND INSTALLING THE SPECIFIED TEE OR WYE SECTION, FURNISHING AND INSTALLING THE REQUIRED CONCRETE COLLAR, AND ALL OTHER MATERIAL NECESSARY TO COMPLETE THIS WORK AS SHOWN AND SPECIFIED.

REMOVAL AND REINSTALLATION OF EXISTING STORM SEWER ADJACENT TO THE PROPOSED TEE OR WYE SECTION, FOR THE PURPOSE OF FACILITATING THE INSTALLATION OF THE TEE OR WYE SECTION, WILL NOT BE PAID FOR SEPARATELY BUT SHALL BE INCLUDED IN THE UNIT PRICE BID FOR THE WORK.

TRENCH BACKFILL, EXCAVATION IN ROCK AND REMOVAL AND REPLACEMENT OF UNSUITABLE MATERIAL BELOW PLAN BEDDING GRADE WILL BE PAID FOR SEPARATELY.

CONCRETE COLLAR FOR CONNECTING A PROPOSED STORM SEWER TO AN EXISTING STORM SEWER WILL NOT BE PAID PAID FOR SEPARATELY BUT SHALL BE INCLUDED IN THE COST OF THE PROPOSED STORM SEWER.

ALL DIMENSIONS ARE IN INCHES (MILLIMETERS) UNLESS OTHERWISE SHOWN.

FILE NAME = W:\diststd\22x34\bd07.dgn	USER NAME = gaglianobt	DESIGNED - M. DE YONG	REVISED - M. DE YONG 05-08-92	STATE OF ILLINOIS DEPARTMENT OF TRANSPORTATION	DETAIL OF STORM SEWER CONNECTION TO EXISTING SEWER			F.A.I. RTE.	SECTION	COUNTY	TOTAL SHEETS / SHEET NO.
		DRAWN -	REVISED - R. SHAH 09-09-94					94	2012-060-BR	COOK	285 / 248
	PLOT SCALE = 50.000 ' / IN.	CHECKED -	REVISED - R. SHAH 10-25-94					BD500-01 (BD-7)		CONTRACT NO. 60V61	
	PLOT DATE = 1/4/2008	DATE - 07-25-90	REVISED - R. SHAH 06-12-96		SCALE: NONE	SHEET NO. 1 OF 1 SHEETS	STA. TO STA.	FED. ROAD DIST. NO. 1	ILLINOIS	FED. AID PROJECT	

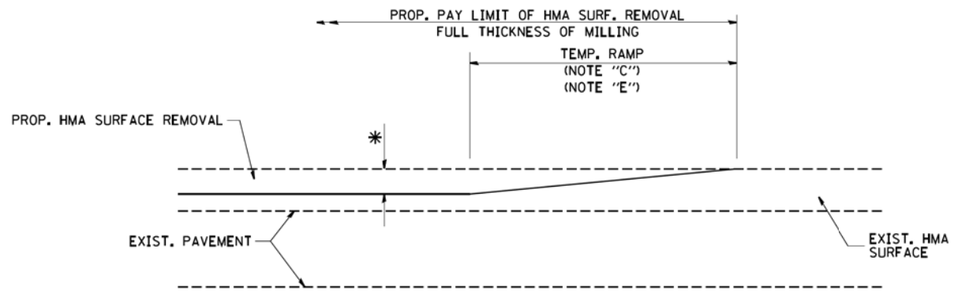

MILLED TEMPORARY RAMP

(FOR BUTT JOINT AND HMA TAPER SEE DETAIL BELOW)

OPTION 1

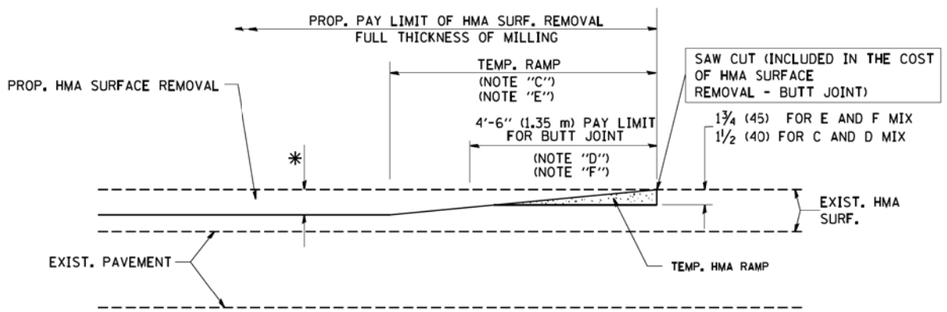

HMA CONSTRUCTED TEMPORARY RAMP

(FOR BUTT JOINT AND HMA TAPER SEE DETAIL BELOW)

OPTION 2

TYPICAL TEMPORARY RAMP

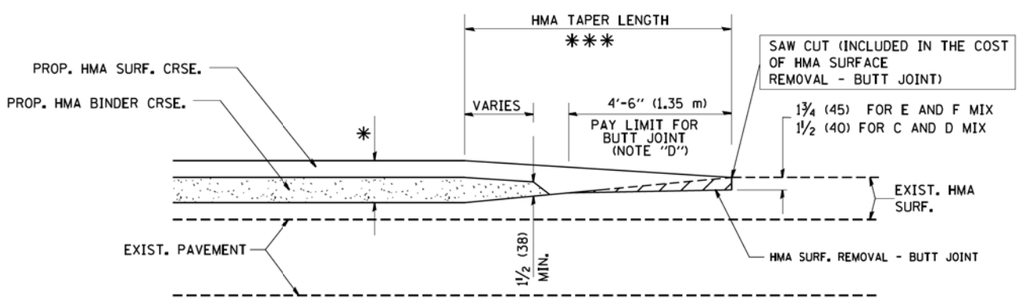

BUTT JOINT AND HMA TAPER

TYPICAL BUTT JOINT AND HMA TAPER FOR MILLING AND RESURFACING

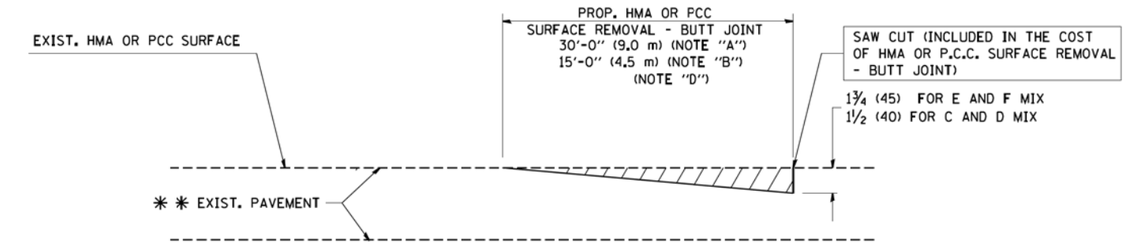

BUTT JOINT DETAIL

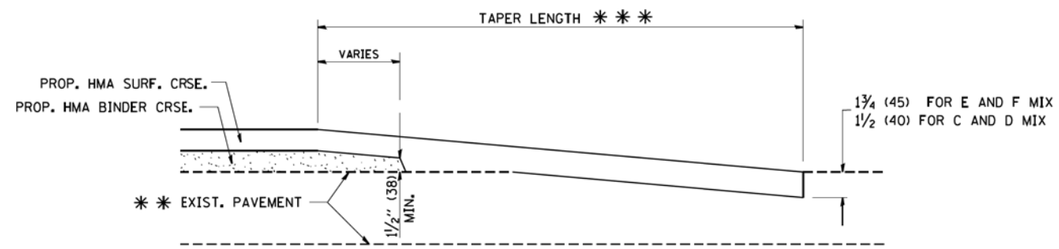

HMA TAPER DETAIL

TYPICAL BUTT JOINT AND HMA TAPER FOR RESURFACING ONLY

** PC CONCRETE, HMA OR HMA RESURFACED PAVEMENT.

NOTES

A: MAINLINE ROADWAYS AND MAJOR SIDE ROADS.

B: MINOR SIDE ROADS.

C: THE TEMP. RAMP SHALL BE CONSTRUCTED IMMEDIATELY UPON REMOVAL OF THE EXISTING HMA SURFACE.

D: THE BUTT JOINT SHALL BE CONSTRUCTED IMMEDIATELY PRIOR TO PLACING THE PROPOSED HMA COURSES.

E: TAPER THE TEMP. RAMP AT A RATE OF 3'-0" (900 mm) PER 1 INCH (25 mm) OF MILLING THICKNESS.

F: INSTALLATION AND REMOVAL OF THE 4'-6" (1.35 m) TEMP. RAMP IS INCLUDED IN COST OF HMA SURFACE REMOVAL - BUTT JOINT

G: SEE ARTICLE 406.08 AND 406.14 OF THE STANDARD SPECIFICATIONS FOR "HMA AND/OR PCC SURFACE REMOVAL, BUTT JOINT".

* SEE TYPICAL SECTIONS FOR MILLING THICKNESS.

*** 20'-0" (6.1 m) PER 1 (25) RESURFACING (NOTE "A")
10'-0" (3.0 m) PER 1 (25) RESURFACING (NOTE "B")

BASIS OF PAYMENT:

THE BUTT JOINT WILL BE PAID FOR AT THE CONTRACT UNIT PRICE PER SQUARE YARD (SQUARE METER) FOR "HOT-MIX ASPHALT SURFACE REMOVAL - BUTT JOINT" OR FOR "PORTLAND CEMENT CONCRETE SURFACE REMOVAL- BUTT JOINT".

ALL DIMENSIONS ARE IN INCHES (MILLIMETERS) UNLESS OTHERWISE SHOWN.

FILE NAME = W:\diststd\22x34\bd32.dgn	USER NAME = gaglianobt	DESIGNED - M. DE YONG	REVISED - R. SHAH 10-25-94	STATE OF ILLINOIS DEPARTMENT OF TRANSPORTATION	BUTT JOINT AND HMA TAPER DETAILS			F.A.I. RTE.	SECTION	COUNTY	TOTAL SHEETS	SHEET NO.
		DRAWN -	REVISED - A. ABBAS 03-21-97					94	2012-060-BR	COOK	285	249
	PLOT SCALE = 50.0000 ' / IN.	CHECKED -	REVISED - M. GOMEZ 04-06-01					BD400-05 BD32		CONTRACT NO. 60V61		
	PLOT DATE = 1/4/2008	DATE - 06-13-90	REVISED - R. BORO 01-01-07		SCALE: NONE	SHEET NO. 1 OF 1 SHEETS	STA. TO STA.	FED. ROAD DIST. NO. 1	ILLINOIS	FED. AID PROJECT		

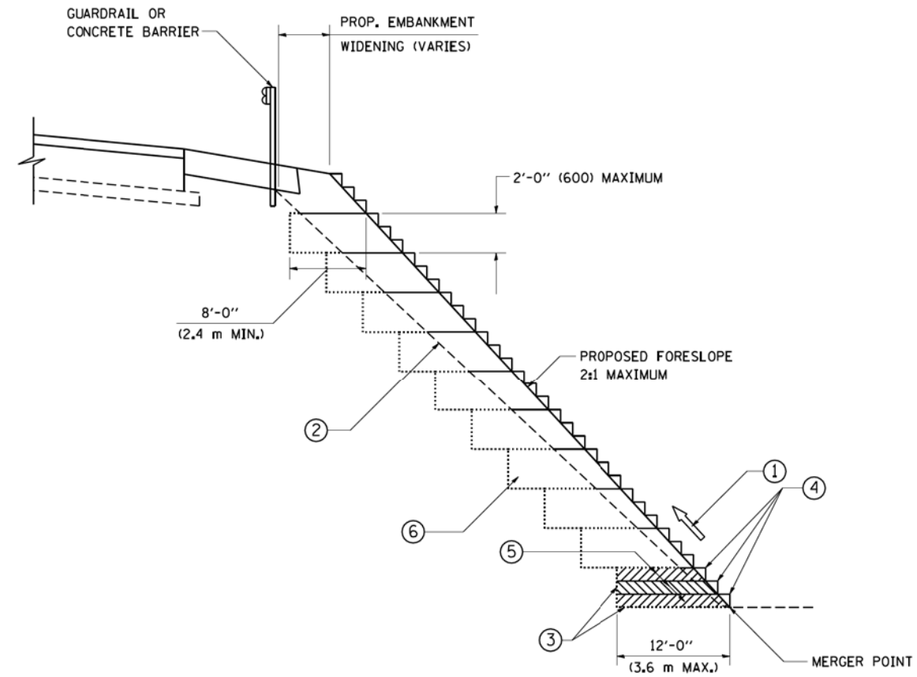

TYPICAL BENCHING DETAIL FOR EMBANKMENT

NOTES:

1. CONSTRUCT SUCCEEDING BENCH CUTS AND EMBANKMENT PLACEMENT AND COMPACTION FROM BOTTOM TO TOP IN STAIRSTEP FASHION.
2. EXISTING FORESLOPE PREPARED IN ACCORDANCE WITH ARTICLE 205.03 OF THE STANDARD SPECIFICATIONS.
3. BENCH CUT EXISTING SLOPE TYPICAL FOR EACH STEP.
4. TRIM TO FINAL SLOPE.
5. EQUAL 8-INCH (200) LIFTS OF EMBANKMENT COMPACTED IN ACCORDANCE WITH ARTICLE 205.05 OF THE STANDARD SPECIFICATIONS.
6. EXCAVATION OF BENCH CUTS WITHIN EXISTING EMBANKMENT WILL BE PAID FOR AT THE CONTRACT UNIT PRICE PER CUBIC METER OR CUBIC YARD FOR "EARTH EXCAVATION". THIS PRICE WILL INCLUDE ALL LABOR AND MATERIAL, NO ADDITIONAL COMPENSATION WILL BE ALLOWED.
7. SLOPES SHALL BE BENCHED ACCORDING TO THIS DETAIL WHEN THE SLOPE IS STEEPER THAN 4:1 AND THE HEIGHT IS GREATER THAN 5' (1.5 m).

ALL DIMENSIONS ARE IN INCHES (MILLIMETERS) UNLESS OTHERWISE SHOWN.

FILE NAME = W:\diststd\22x34\bd51.dgn	USER NAME = gaglianobt	DESIGNED -	REVISED -
		DRAWN - CADD	REVISED -
	PLOT SCALE = 50.0000 ' / IN.	CHECKED - S.E.B.	REVISED -
	PLOT DATE = 1/4/2008	DATE - 06-16-04	REVISED -

STATE OF ILLINOIS
DEPARTMENT OF TRANSPORTATION

BENCHING DETAIL
FOR EMBANKMENT WIDENING

SCALE: NONE | SHEET NO. 1 OF 1 SHEETS | STA. | TO STA.

F.A.I. RTE.	SECTION	COUNTY	TOTAL SHEETS	SHEET NO.
94	2012-060-BR	COOK	285	250
	BD-51	CONTRACT NO. 60V61		

FED. ROAD DIST. NO. 1 | ILLINOIS | FED. AID PROJECT

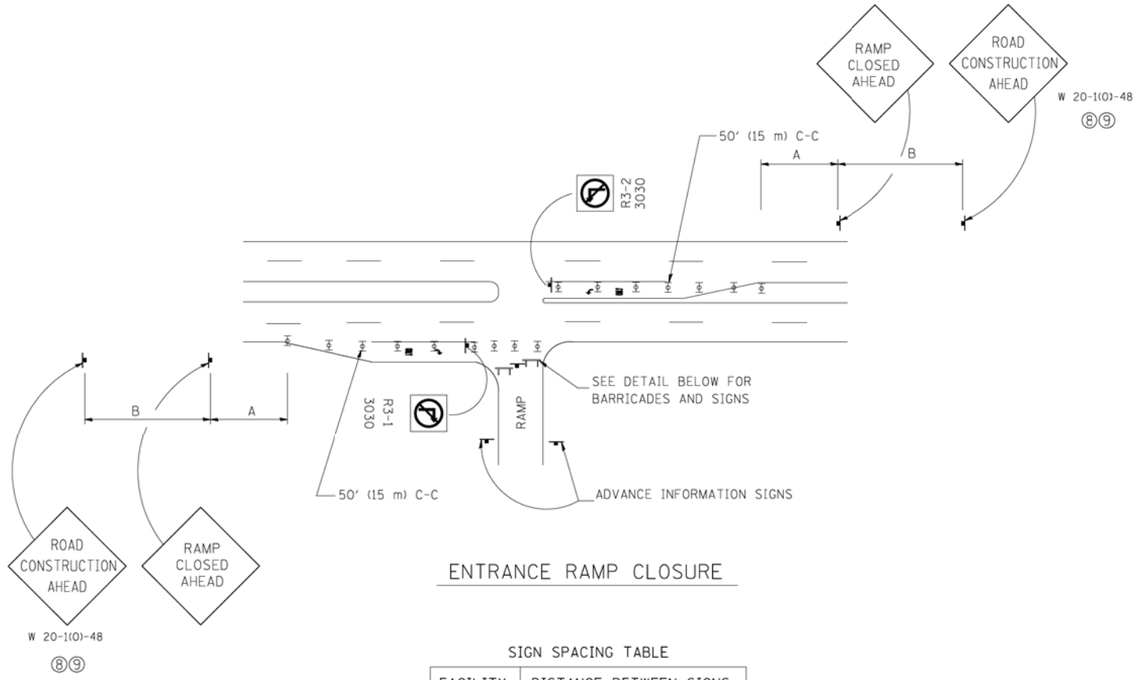

ENTRANCE RAMP CLOSURE

SIGN SPACING TABLE

FACILITY	DISTANCE BETWEEN SIGNS	
	A	B
EXPRESSWAY >24 HOURS	1000' (300 m)	1500' (450 m)
EXPRESSWAY ≤24 HOURS	500' (150 m)	500' (150 m)
ARTERIAL ≥45 MPH	350' (100 m)	350' (100 m)
ARTERIAL <45 MPH	150' (45 m)	150' (45 m)

DISTANCES MAY BE SHORTENED DEPENDING UPON THE PROXIMITY OF ADJACENT RAMPS OR INTERSECTIONS.

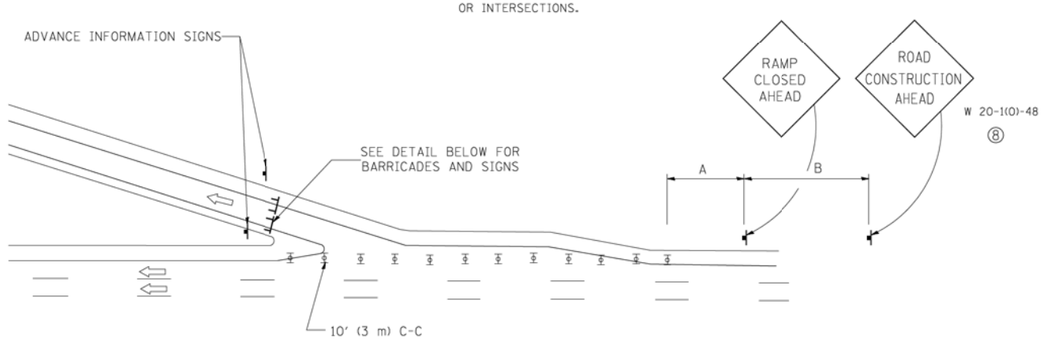

EXIT RAMP CLOSURE

SYMBOLS

TYPE II BARRICADE, DRUM OR VERTICAL BARRICADE WITH STEADY BURN MONO-DIRECTIONAL LIGHT

TYPE III BARRICADE WITH FLASHING LIGHT

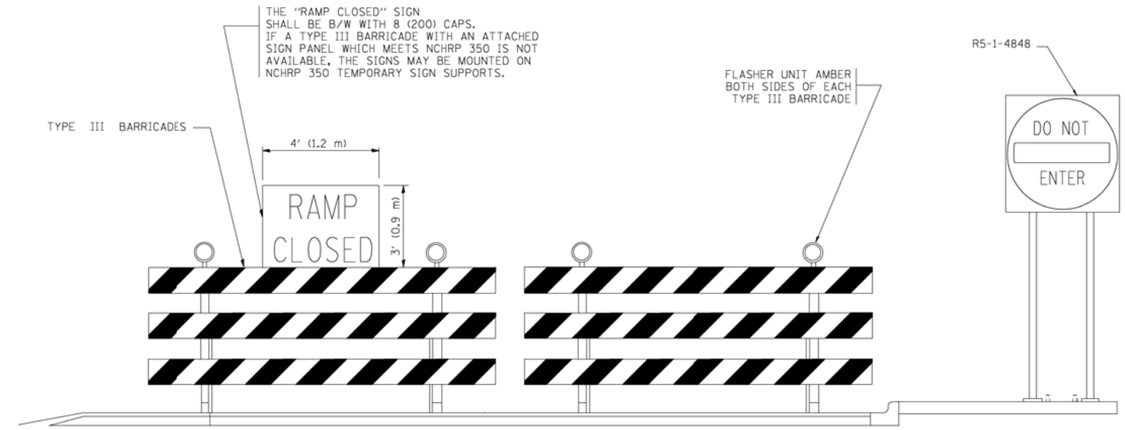

DETAIL FOR REQUIRED BARRICADES & SIGNS

RAMP CLOSURE ADVANCE WARNING SIGN

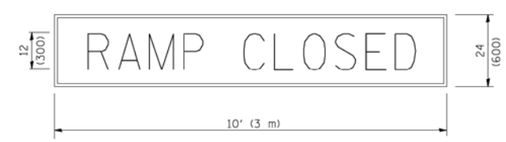

BLACK LEGEND ON ORANGE REFLECTORIZED BACKGROUND

1 (25) BORDER

THESE SIGNS ARE REQUIRED ON ALL THE EXIT GUIDE SIGNS FOR THE CLOSED EXIT RAMPS.

RAMP CLOSURE ADVANCE INFORMATION SIGN

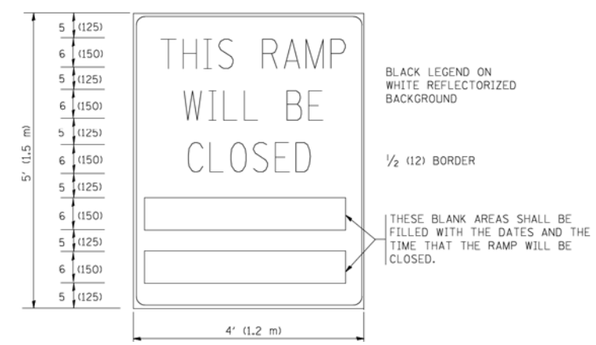

THESE SIGNS ARE REQUIRED ON BOTH SIDES OF THE RAMP, MINIMUM OF 1 WEEK IN ADVANCE OF THE CLOSURE.

GENERAL NOTES:

1. CONES MAY BE SUBSTITUTED FOR DRUMS OR TYPE II BARRICADES DURING DAY OPERATIONS. CONES SHALL BE A MINIMUM OF 28 (700) HIGH.
2. STEADY BURN LIGHTS WILL NOT BE REQUIRED FOR DAY OPERATIONS.
3. A FLAGGER SHALL BE POSITIONED AT EACH CLOSED RAMP THAT IS OPEN TO CONSTRUCTION VEHICLES.
4. ALL ROUTE MARKERS AND TRAILBLAZER ASSEMBLIES WHICH DIRECT MOTORISTS TO A CLOSED ENTRANCE RAMP SHALL BE COVERED.
5. THE SIGNING AND BARRICADING WHICH IS REQUIRED BY THIS DETAIL SHALL BE INCLUDED IN THE COST OF TRAFFIC CONTROL AND PROTECTION (EXPRESSWAYS).
6. AUTHORIZATION FROM THE DISTRICT'S BUREAU OF TRAFFIC IS REQUIRED FOR ALL RAMP CLOSURES.
7. THE RAMP CLOSURE ADVANCE INFORMATION SIGNS SHALL BE ERECTED IF THE CLOSURE TIME EXCEEDS TWENTY- FOUR 24 HOURS. ADDITIONAL ADVANCE WARNING SIGNS ON EXIT GUIDE SIGNING WILL BE REQUIRED FOR EXIT RAMP CLOSURES THAT EXCEED TWENTY FOUR 24 HOURS IN LENGTH.
8. ROAD CONSTRUCTION AHEAD SIGNS MAY BE OMITTED WHEN THIS DETAIL IS USED IN CONJUNCTION WITH OTHER TRAFFIC CONTROL THAT ALREADY INCLUDES A ROAD CONSTRUCTION AHEAD SIGN.
9. ARTERIAL ROAD CONSTRUCTION AHEAD SIGNS MAY BE OMITTED ON CLOSURES LESS THAN 24 HOURS IN DURATION.

ALL DIMENSIONS ARE IN INCHES (MILLIMETERS) UNLESS OTHERWISE SHOWN.

FILE NAME = W:\diststd\22x34\tc08.dgn	USER NAME = leyso	DESIGNED - DWS	REVISED - DWS/JAF 12-02	STATE OF ILLINOIS DEPARTMENT OF TRANSPORTATION
		DRAWN -	REVISED - JAF 02-06	
	PLOT SCALE = 50.000 ' / IN.	CHECKED -	REVISED - SPB 01-07	
	PLOT DATE = 11/3/2010	DATE - 02-83	REVISED - SPB 12-09	

FREEWAY ENTRANCE AND EXIT RAMP CLOSURE DETAILS

SCALE: NONE | SHEET NO. 1 OF 1 SHEETS | STA. | TO STA.

F.A.I. RTE.	SECTION	COUNTY	TOTAL SHEETS	SHEET NO.
94	2012-060-BR	COOK	285	251
	TC-08	CONTRACT NO. 60V61		

FED. ROAD DIST. NO. 1 | ILLINOIS | FED. AID PROJECT

SINGLE LANE WEAVE

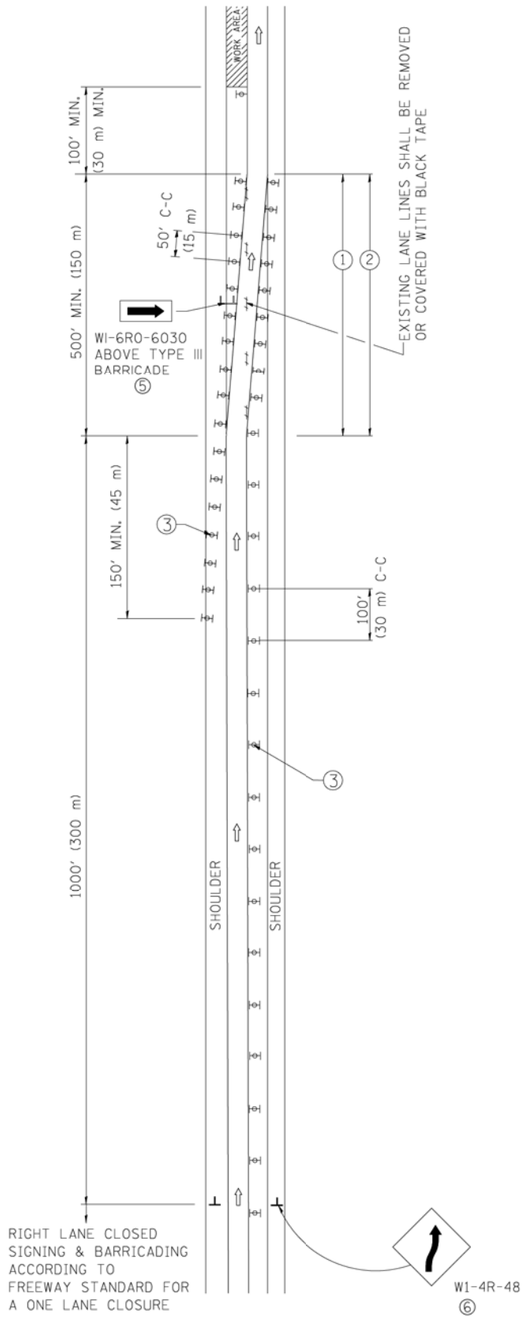

MULTI-LANE WEAVE

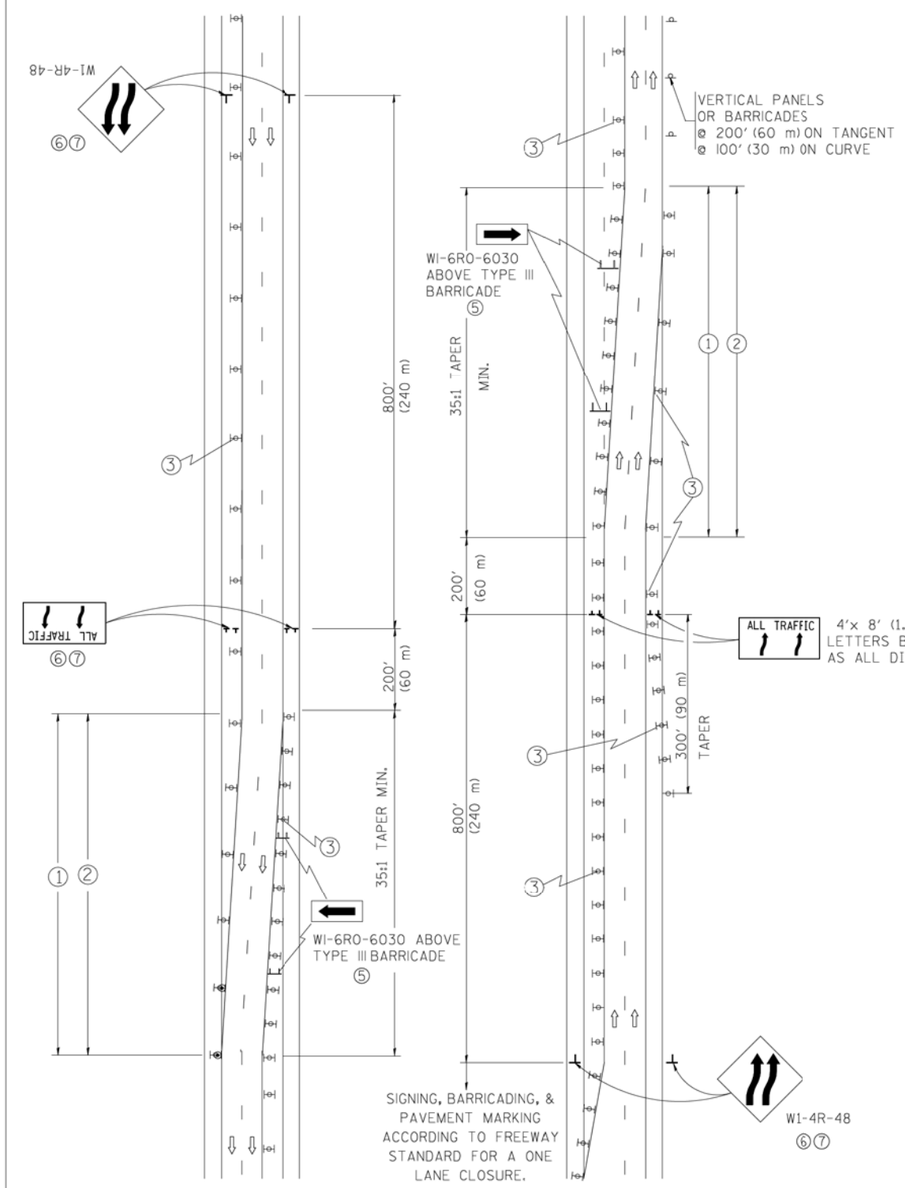

ALL TRAFFIC — 4'x 8' (1.2 m x 2.4 m); 1 (25) BORDER; 10 (250) CAPITAL LETTERS BACKGROUND SHEETING SHALL BE THE SAME AS ALL DIAMOND SHAPED CONSTRUCTION SIGNS.

GENERAL NOTES

① EXISTING CONFLICTING PAVEMENT MARKING LINES SHALL BE REMOVED. PAVEMENT MARKING REMOVAL SHALL NOT BE REQUIRED FOR SINGLE LANE WEAVES UNDER 24 HOURS IN DURATION.

② CONTINOUS REFLECTIVE TEMPORARY PAVEMENT MARKING TAPE SHALL BE PLACED THROUGHOUT THE TAPER AND FOR 300' (90 m) ALONG SIDE THE WORK AREA WHERE THE CLOSURE TIME IS GREATER THAN FOURTEEN DAYS. THE LEFT EDGE LINE SHALL BE YELLOW AND THE RIGHT EDGE LINE SHALL BE WHITE. FOR MULTI-LANE WEAVES LANE LINES SHALL BE 5 INCH, 10'-30' (3 m-9 m) SKIP DASH, WHITE.

③ PLASTIC DRUMS WITH STEADY BURN LIGHTS AT 50' (15 m) C-C SPACING IN TAPERS AND 100' (30 m) C-C SPACING IN TANGENTS.

④ ALL SIGNS SHALL BE POST MOUNTED IF THE CLOSURE TIME EXCEEDS FOUR DAYS.

⑤ IF A TYPE III BARRICADE WITH AN ATTACHED SIGN PANEL WHICH MEETS NCHRP 350 IS NOT AVAILABLE, THE SIGNS MAY BE MOUNTED ON NCHRP 350 TEMPORARY SIGN SUPPORTS. TYPE III BARRICADES MAY BE OMMITTED FOR SINGLE-LANE WEAVES UNDER 24-HOURS IN DURATION. W1-6 SIGNS WILL STILL BE REQUIRED. IF THE WIDTH OF OFFSET IS LESS THAN 6' THEN THE TYPE III BARRICADE WITH ATTACHED ARROW SIGN PANEL CAN BE ELIMINATED IN THE TAPER AREAS.

⑥ WHEN THE LENGTH OF THE SHIFTED SEGMENT (DISTANCE BETWEEN WEAVE POINTS) IS LESS THAN 1500', DOUBLE REVERSE CURVE SIGNS (W24-1) SHOULD BE USED INSTEAD OF THE REVERSE CURVE (W1-4) SIGNS. ARROWS ON THE 4'X8' "ALL TRAFFIC" SIGNS SHALL BE THE SAME SHAPE.

⑦ THE NUMBER OF ARROWS ON THESE SIGNS SHALL MATCH THE NUMBER OF LANES OPEN TO TRAFFIC.

SYMBOLS

- DIRECTION OF TRAFFIC
- WORK AREA
- SIGN ON PORTABLE OR PERMANENT SUPPORT
- TYPE II BARRICADE OR DRUM WITH MONO-DIRECTIONAL STEADY BURNING LIGHT

W24-1-48
⑦

ALL DIMENSIONS ARE IN INCHES (MILLIMETERS) UNLESS OTHERWISE SHOWN

FILE NAME = W:\diststd\22x34\tc09.dgn	USER NAME = leyso	DESIGNED - DWS	REVISED - JAF 01-03	STATE OF ILLINOIS DEPARTMENT OF TRANSPORTATION	TRAFFIC CONTROL DETAILS FOR FREEWAY SINGLE & MULTI-LANE WEAVE	F.A.I. RTE.	SECTION	COUNTY	TOTAL SHEETS	SHEET NO.
		DRAWN -	REVISED - JAF 02-06			94	2012-060-BR	COOK	285	252
	PLOT SCALE = 50.000 ' / IN.	CHECKED -	REVISED - SPB 01-07			TC-09		CONTRACT NO. 60V61		
	PLOT DATE = 1/26/2010	DATE - 02-87	REVISED - SPB 12-09		SCALE: NONE / SHEET NO. 1 OF 1 SHEETS / STA. TO STA.	FED. ROAD DIST. NO. 1	ILLINOIS	FED. AID PROJECT		

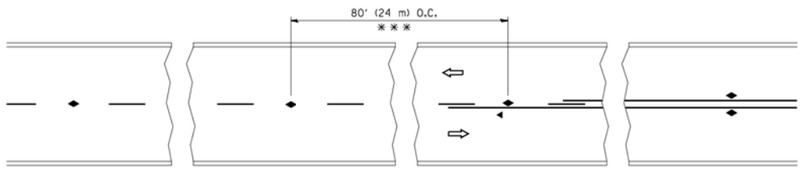

* * * REDUCE TO 40' (12 m) O.C. ON CURVES WITH POSTED OR ADVISORY SPEED 45 M.P.H. (70 km/h) OR LESS.

TWO-LANE/TWO-WAY

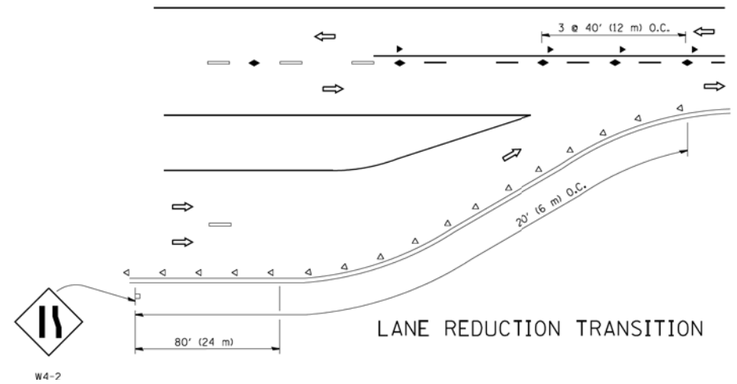

LANE REDUCTION TRANSITION

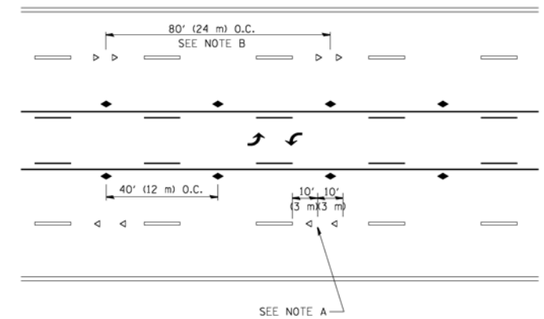

TWO-WAY LEFT TURN

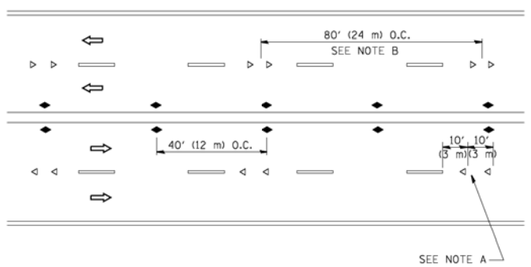

MULTI-LANE/UNDIVIDED

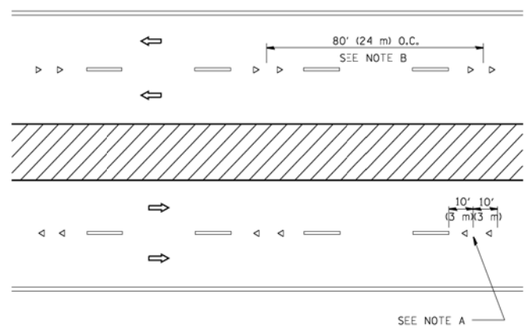

MULTI-LANE/DIVIDED

GENERAL NOTES

1. MARKERS USED WITH DASHED LINES SHALL BE CENTERED IN THE GAP BETWEEN SEGMENTS.
2. MARKERS USED ADJACENT TO SOLID LINES SHALL BE OFFSET 2 TO 3 (50 TO 75) TOWARD TRAFFIC AS SHOWN.
3. MARKERS THROUGH TANGENTS LESS THAN 500' (150 m) IN LENGTH BETWEEN CURVES SHALL BE INSTALLED AT THE LESSER OF THE TWO CURVE SPACINGS.

SYMBOLS

- YELLOW STRIPE
- WHITE STRIPE
- ONE-WAY AMBER MARKER
- ONE-WAY CRYSTAL MARKER (W/O)
- TWO-WAY AMBER MARKER

LANE MARKER NOTES

A. USE DOUBLE LANE LINE MARKERS SPACED AS SHOWN.

B. REDUCE TO 40' (12 m) O.C. ON CURVES WHERE ADVISORY SPEEDS ARE 10 M.P.H (20 km/h) LOWER THAN POSTED SPEEDS.

DESIGN NOTES

1. DOUBLE LANE LINE MARKERS SHALL BE USED UNLESS SPECIFIED OTHERWISE.
2. EXCEPT AS SHOWN ON THE LANE REDUCTION TRANSITION AND FREEWAY EXIT RAMP DETAIL, MARKERS ARE NOT TO BE SPECIFIED ON RIGHT EDGE LINES.
3. THE EXACT MARKER LIMITS, SPACING, AND COLOR SHALL BE INCLUDED IN THE PLANS WHEN STANDARD SPECIFICATIONS ARE NOT BEING USED.
4. MARKERS SHOULD NOT BE USED ALONGSIDE CURBS EXCEPT FOR EXTREMELY SHORT SECTIONS OF CURBS WHERE NOT MORE THAN TWO MARKERS WOULD BE INVOLVED.

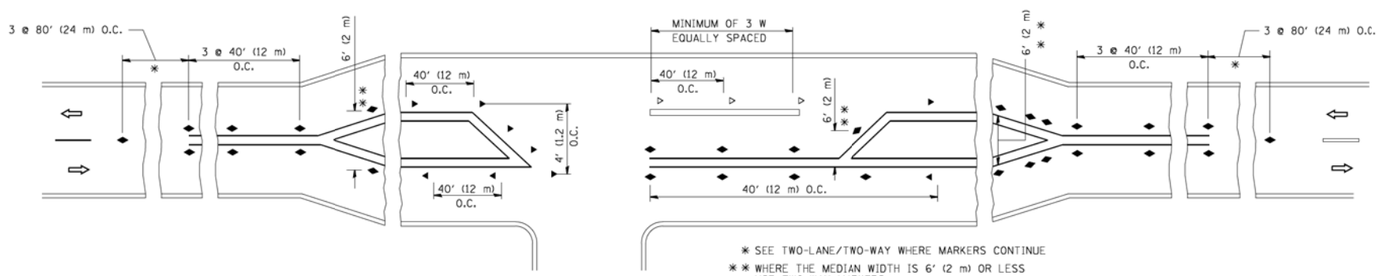

* SEE TWO-LANE/TWO-WAY WHERE MARKERS CONTINUE

* * WHERE THE MEDIAN WIDTH IS 6' (2 m) OR LESS USE TWO-WAY MARKERS.

LEFT TURN

All dimensions are in inches (millimeters) unless otherwise shown.

FILE NAME = c:\pw_work\pwidot\leysa\d0108315\tc11.dgn	USER NAME = leysa	DESIGNED -	REVISED - T. RAMMACHER 09-19-94	STATE OF ILLINOIS DEPARTMENT OF TRANSPORTATION
		DRAWN -	REVISED - T. RAMMACHER 03-12-99	
	PLOT SCALE = 50.000 ' / IN.	CHECKED -	REVISED - T. RAMMACHER 01-06-00	
	PLOT DATE = 3/2/2011	DATE -	REVISED - C. JUCIUS 09-09-09	

TYPICAL APPLICATIONS
RAISED REFLECTIVE PAVEMENT MARKERS (SNOW-PLOW RESISTANT)

SCALE: NONE | SHEET NO. 1 OF 1 SHEETS | STA. | TO STA.

F.A.I. RTE.	SECTION	COUNTY	TOTAL SHEETS	SHEET NO.
94	2012-060-BR	COOK	285	253
	TC-11	CONTRACT NO. 60V61		

FED. ROAD DIST. NO. 1 | ILLINOIS | FED. AID PROJECT

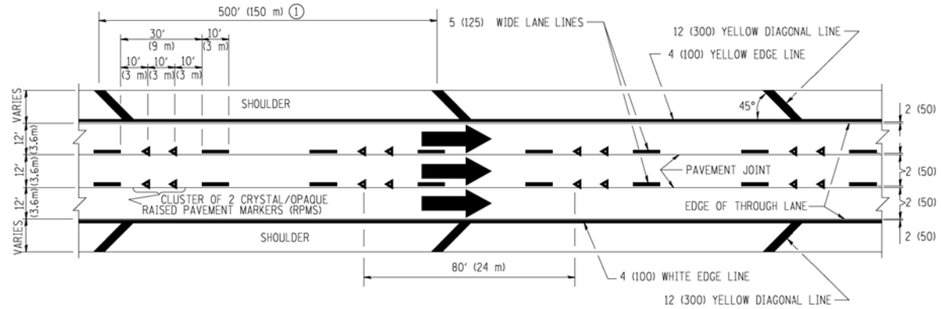

TYPICAL EDGE LINES & LANE LINES

PAVEMENT MARKING MATERIALS

1. THERMO PLASTIC PAVEMENT MARKING LINE SHALL BE USED FOR THE EDGE LINES, GORE LINES, AND DIAGONAL LINES ON BITUMINOUS PAVEMENT ONLY.
2. PREFORMED PLASTIC TYPE B PAVEMENT MARKING LINE SHALL BE USED FOR ALL LANE LINES ON BITUMINOUS PAVEMENT.
3. POLYUREA PAVEMENT MARKING SHALL BE USED FOR ALL MARKINGS ON PCC.

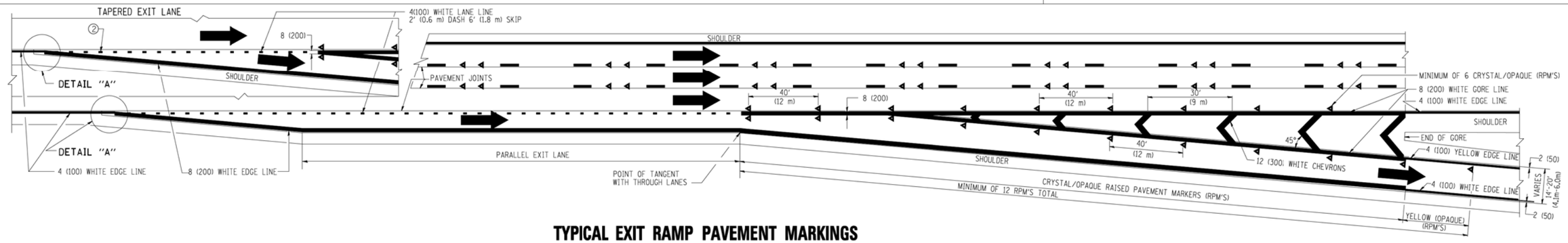

TYPICAL EXIT RAMP PAVEMENT MARKINGS

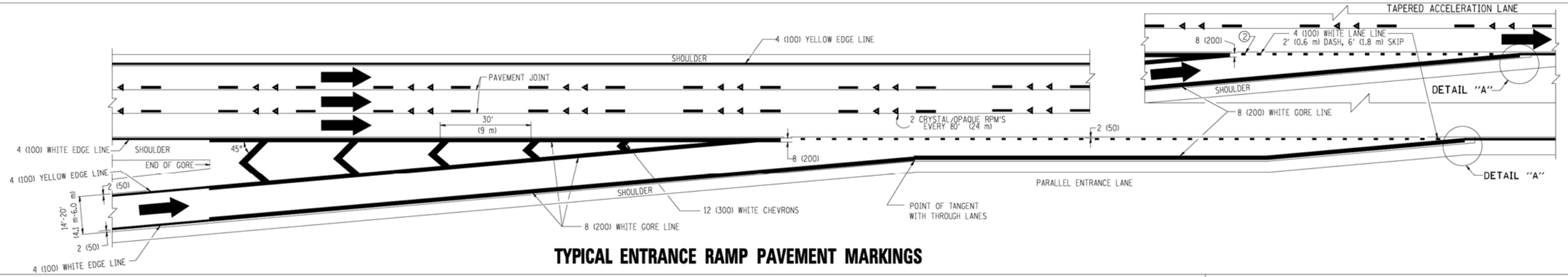

TYPICAL ENTRANCE RAMP PAVEMENT MARKINGS

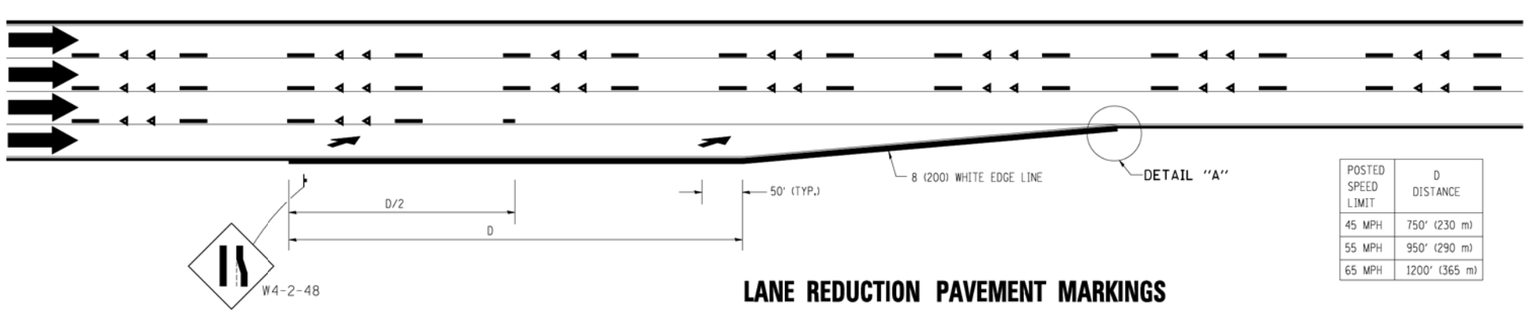

POSTED SPEED LIMIT	D DISTANCE
45 MPH	750' (230 m)
55 MPH	950' (290 m)
65 MPH	1200' (365 m)

LANE REDUCTION PAVEMENT MARKINGS

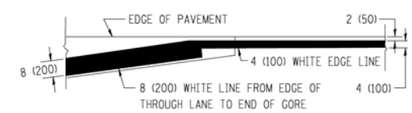

DETAIL "A"

NOTES:

① THE DIAGONAL LINES SHALL BE SPACED AT 40' (12 m) C-C ACROSS ALL STRUCTURES WHICH ARE 500' (150 m) OR LESS IN LENGTH. THE DIAGONAL LINES ARE NOT REQUIRED ON SHOULDERS WHICH ARE 6' (1.8 m) OR LESS IN WIDTH.

② 4" (2' DASH, 6' SKIP) MARKING ON TAPERED ENTRANCE AND EXIT RAMP SHALL BE OMITTED ON TANGENT SECTIONS.

FILE NAME = c:\pw_work\PWIDOT\LEYSA\d0103115\tc12.dgn	USER NAME = leysa	DESIGNED - D.W.S.	REVISED - D.W.S. 07-96
		DRAWN -	REVISED - J.A.F. 02-06
	PLOT SCALE = 50.000 ' / IN.	CHECKED -	REVISED - S.P.B. 01-07
	PLOT DATE = 1/22/2010	DATE - 01-90	REVISED - S.P.B. 01-10

STATE OF ILLINOIS
DEPARTMENT OF TRANSPORTATION

MULTI-LANE FREEWAY
PAVEMENT MARKING DETAILS

SCALE: NONE | SHEET NO. 1 OF 2 SHEETS | STA. | TO STA.

F.A.I. RTE.	SECTION	COUNTY	TOTAL SHEETS	SHEET NO.
94	2012-060-BR	COOK	285	254
	TC-12	CONTRACT NO. 60V61		

FED. ROAD DIST. NO. 1 | ILLINOIS | FED. AID PROJECT

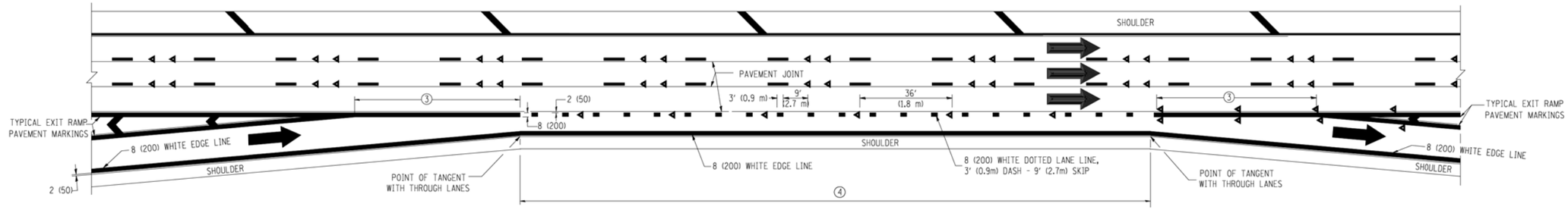

AUXILIARY LANE MARKINGS

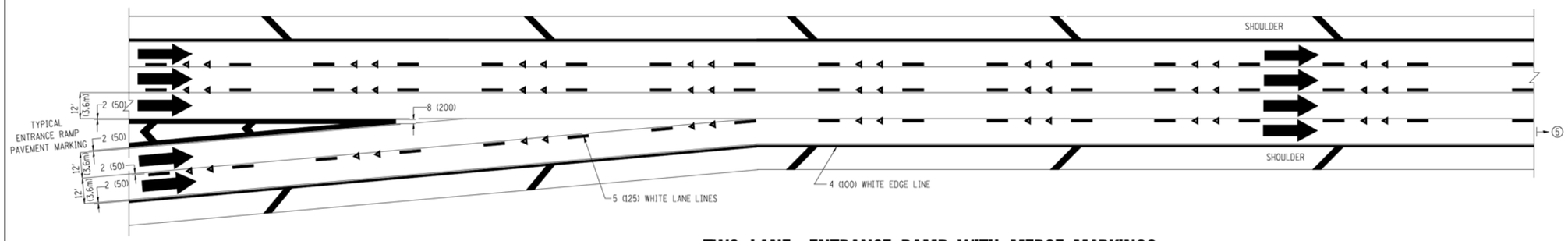

TWO LANE ENTRANCE RAMP WITH MERGE MARKINGS

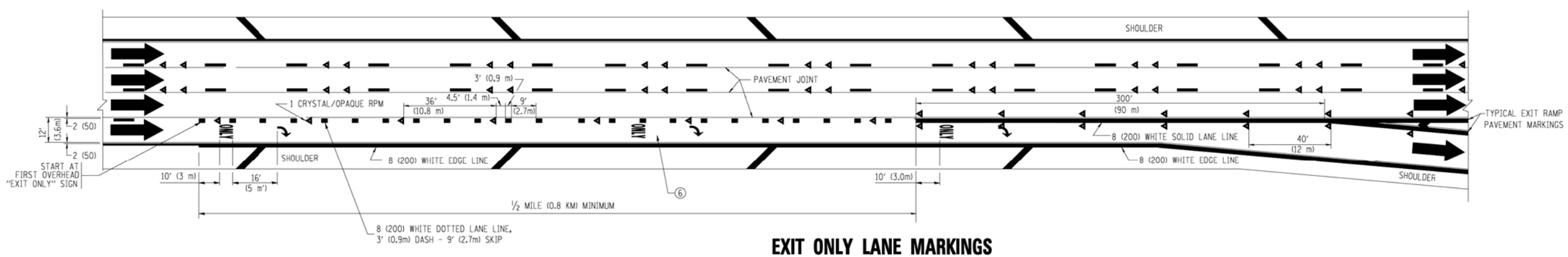

EXIT ONLY LANE MARKINGS

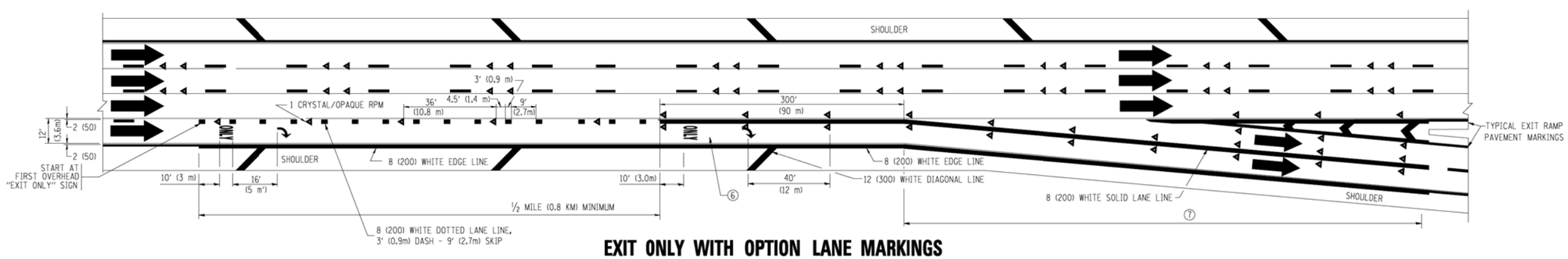

EXIT ONLY WITH OPTION LANE MARKINGS

NOTES

3. OMIT WHEN LENGTH OF AUXILIARY LANE IS LESS THAN 500' (150 m).
4. 8-INCH WIDE DOTTED LANE LINE MARKINGS SHALL BE USED WHEN THE LENGTH OF THE AUXILIARY LANE IS 2 MILES OR LESS.
5. FOR TWO-LANE ENTRANCE RAMP, IF RIGHT LANE ENDS, USE TYPICAL ENTRANCE RAMP PAVEMENT MARKINGS.
6. ONLY AND ARROWS EQUALLY SPACED, 500' (150 m) MAXIMUM SPACING. FULL SIZE LETTERS AND ARROW SHALL BE USED.
7. CONTINUE 8" SOLID LANE LINE THROUGH EXIT TO END OF PAVED GORE.

FILE NAME = c:\pw_work\PWIDOT\LEYSA\d0103315\tc12.dgn	USER NAME = leysa	DESIGNED - D.W.S.	REVISED - D.W.S. 07-96
		DRAWN -	REVISED - J.A.F. 02-06
	PLOT SCALE = 50.000 ' / IN.	CHECKED -	REVISED - S.P.B. 01-07
	PLOT DATE = 1/22/2010	DATE - 01-90	REVISED - S.P.B. 01-10

STATE OF ILLINOIS
DEPARTMENT OF TRANSPORTATION

MULTI-LANE FREEWAY
PAVEMENT MARKING DETAILS

SCALE: NONE | SHEET NO. 2 OF 2 SHEETS | STA. | TO STA.

F.A.I. RTE.	SECTION	COUNTY	TOTAL SHEETS	SHEET NO.
94	2012-060-BR	COOK	285	255
	TC-12	CONTRACT NO. 60V61		

FED. ROAD DIST. NO. 1 | ILLINOIS | FED. AID PROJECT

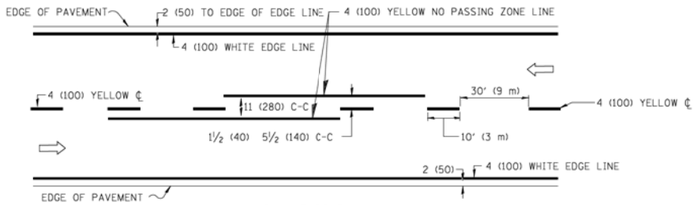

2-LANE ROADWAY

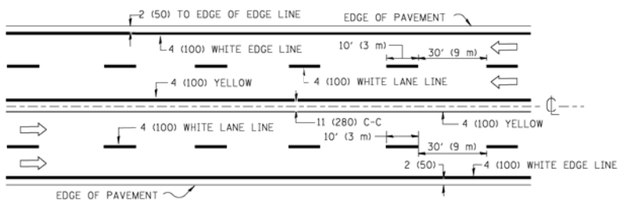

MULTI-LANE UNDIVIDED

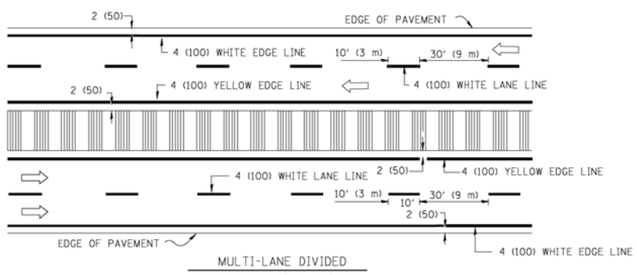

MULTI-LANE DIVIDED
WITH MOUNTABLE MEDIAN

NOTE: MEDIANS WITH BARRIER CURB DO NOT REQUIRE AN EDGE LINE

TYPICAL LANE AND EDGE LINE MARKING

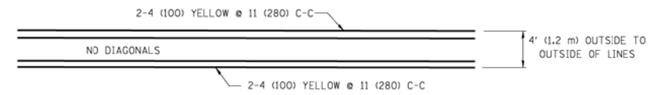

4' (1.2 m) WIDE MEDIANS ONLY

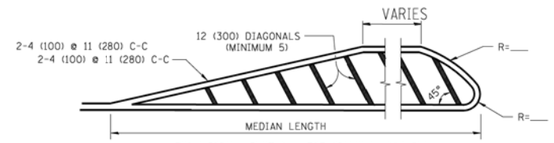

FOR MEDIAN LENGTHS WHERE DIAGONAL SPACING CANNOT BE ATTAINED, USE 5 (FIVE) EQUALLY SPACED DIAGONAL LINES.

DIAGONAL LINE SPACING: 50' (15 m) C-C (LESS THAN 30MPH (50 km/h))
75' (25 m) C-C 30MPH (50 km/h) TO 45MPH (70 km/h))
150' (45 m) C-C (MORE THAN 45MPH (70 km/h))

MEDIANS OVER 4' (1.2 m) WIDE

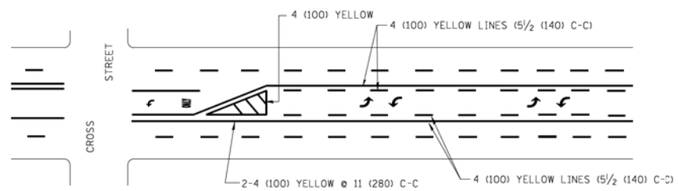

A MINIMUM OF TWO PAIRS OF TURN ARROWS SHALL BE USED, WHITE IN COLOR. ADDITIONAL PAIRS SHALL BE PLACED AT 200' (60 m) TO 300' (90 m) INTERVALS.

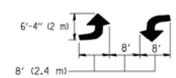

MEDIAN WITH TWO-WAY LEFT TURN LANE

TYPICAL PAINTED MEDIAN MARKING

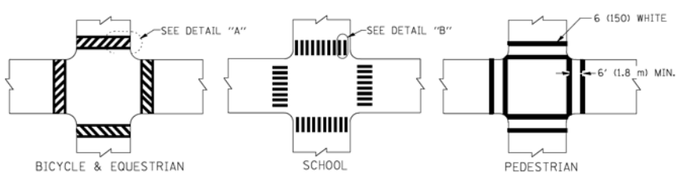

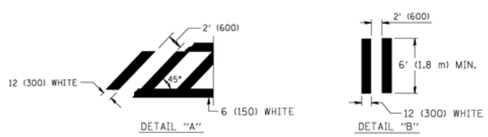

TYPICAL CROSSWALK MARKING

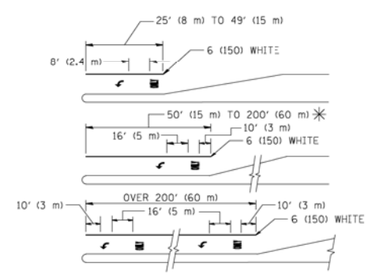

FULL SIZE LETTERS 8' (2.4 m) AND ARROWS SHALL BE USED.
↰ AREA = 15.6 SQ. FT. (1.5 m^2) ONLY AREA = 20.8 SQ. FT. (1.9 m^2)

✳ TURN LANES IN EXCESS OF 400' (120 m) IN LENGTH MAY HAVE AN ADDITIONAL SET OF ARROW - "ONLY" INSTALLED MIDWAY BETWEEN THE OTHER TWO SETS OF ARROW - "ONLY".

TYPICAL LEFT (OR RIGHT) TURN LANE

TYPICAL TURN LANE MARKING

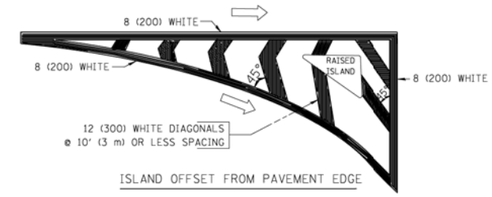

ISLAND OFFSET FROM PAVEMENT EDGE

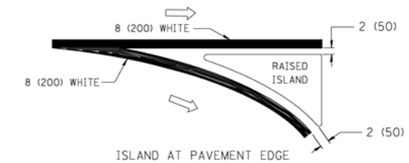

ISLAND AT PAVEMENT EDGE

TYPICAL ISLAND MARKING

TYPE OF MARKING	WIDTH OF LINE	PATTERN	COLOR	SPACING / REMARKS
CENTERLINE ON 2 LANE PAVEMENT	4 (100)	SKIP-DASH	YELLOW	10' (3 m) LINE WITH 30' (9 m) SPACE
CENTERLINE ON MULTI-LANE UNDIVIDED PAVEMENT	2 @ 4 (100)	SOLID	YELLOW	11 (280) C-C
NO PASSING ZONE LINES: FOR ONE DIRECTION FOR BOTH DIRECTIONS	4 (100) 2 @ 4 (100)	SOLID SOLID	YELLOW YELLOW	5½ (140) C-C FROM SKIP-DASH CENTERLINE 11 (280) C-C OMIT SKIP-DASH CENTERLINE BETWEEN
LANE LINES	4 (100) 5 (125) ON FREEWAYS	SKIP-DASH SKIP-DASH	WHITE WHITE	10' (3 m) LINE WITH 30' (9 m) SPACE
DOTTED LINES (EXTENSIONS OF CENTER, LANE OR TURN LANE MARKINGS)	SAME AS LINE BEING EXTENDED	SKIP-DASH	SAME AS LINE BEING EXTENDED	2' (600) LINE WITH 6' (1.8 m) SPACE
EDGE LINES	4 (100)	SOLID	YELLOW-LEFT WHITE-RIGHT	OUTLINE MOUNTABLE MEDIANS IN YELLOW; EDGE LINES ARE NOT USED NEXT TO BARRIER CURB
TURN LANE MARKINGS	6 (150) LINE; FULL SIZE LETTERS & SYMBOLS (8' (2.4m))	SOLID	WHITE	SEE TYPICAL TURN LANE MARKING DETAIL
TWO WAY LEFT TURN MARKING	2 @ 4 (100) EACH DIRECTION 8' (2.4m) LEFT ARROW	SKIP-DASH AND SOLID IN PAIRS	YELLOW WHITE	10' (3 m) LINE WITH 30' (9 m) SPACE FOR SKIP-DASH; 5½ (140) C-C BETWEEN SOLID LINE AND SKIP-DASH LINE SEE TYPICAL TWO-WAY LEFT TURN MARKING DETAIL
CROSSWALK LINES (PEDESTRIAN) A. DIAGONALS (BIKE & EQUESTRIAN) B. LONGITUDINAL BARS (SCHOOL)	2 @ 6 (150) 12 (300) @ 45° 12 (300) @ 90°	SOLID SOLID SOLID	WHITE WHITE WHITE	NOT LESS THAN 6' (1.8 m) APART 2' (600) APART 2' (600) APART SEE TYPICAL CROSSWALK MARKING DETAILS.
STOP LINES	24 (600)	SOLID	WHITE	PLACE 4' (1.2 m) IN ADVANCE OF AND PARALLEL TO CROSSWALK, IF PRESENT. OTHERWISE, PLACE AT DESIRED STOPPING POINT. PARALLEL TO CROSSROAD CENTERLINE, WHERE POSSIBLE
PAINTED MEDIANS	2 @ 4 (100) WITH 12 (300) DIAGONALS @ 45° NO DIAGONALS USED FOR 4' (1.2 m) WIDE MEDIANS	SOLID	YELLOW: TWO WAY TRAFFIC WHITE: ONE WAY TRAFFIC	11 (280) C-C FOR THE DOUBLE LINE SEE TYPICAL PAINTED MEDIAN MARKING.
GORE MARKING AND CHANNELIZING LINES	8 (200) WITH 12 (300) DIAGONALS @ 45°	SOLID	WHITE	DIAGONALS: 15' (4.5 m) C-C (LESS THAN 30MPH (50 km/h)) 20' (6 m) C-C 30MPH (50 km/h) TO 45MPH (70 km/h)) 30' (9 m) C-C (OVER 45MPH (70 km/h))
RAILROAD CROSSING	24 (600) TRANSVERSE LINES; "RR" IS 6' (1.8 m) LETTERS; 16 (400) LINE FOR "X"	SOLID	WHITE	SEE STATE STANDARD 780001 AREA OF: "R"=3.6 SQ. FT. (0.33 m^2) EACH "X"=54.0 SQ. FT. (5.0 m^2)
SHOULDER DIAGONALS	12 (300) @ 45°	SOLID	WHITE - RIGHT YELLOW - LEFT	50' (15 m) C-C (LESS THAN 30MPH (50 km/h)) 75' (25 m) C-C (30 MPH (50 km/h) TO 45MPH (70 km/h)) 150' (45 m) C-C (OVER 45MPH (70 km/h))

FOR FURTHER DETAILS ON PAVEMENT MARKING REFER TO STANDARD SPECIFICATIONS FOR ROAD AND BRIDGE CONSTRUCTION AND STATE STANDARD 780001.

All dimensions are in inches (millimeters) unless otherwise shown.

FILE NAME = c:\pw_work\pwidot\drivakosgn\d0103315\tc13.dgn	USER NAME = drivakosgn	DESIGNED - EVERS	REVISED -T. RAMMACHER 10-27-94
		DRAWN -	REVISED -C. JUCIUS 09-09-09
	PLOT SCALE = 50.000 ' / IN.	CHECKED -	REVISED -
	PLOT DATE = 9/9/2009	DATE - 03-19-90	REVISED -

STATE OF ILLINOIS
DEPARTMENT OF TRANSPORTATION

DISTRICT ONE
TYPICAL PAVEMENT MARKINGS

SCALE: NONE | SHEET NO. 1 OF 1 SHEETS | STA. | TO STA.

F.A.I. RTE.	SECTION	COUNTY	TOTAL SHEETS	SHEET NO.
94	2012-060-BR	COOK	285	256
	TC-13	CONTRACT NO. 60V61		

FED. ROAD DIST. NO. 1 | ILLINOIS | FED. AID PROJECT

PARTIAL RAMP CLOSURE DETAILS

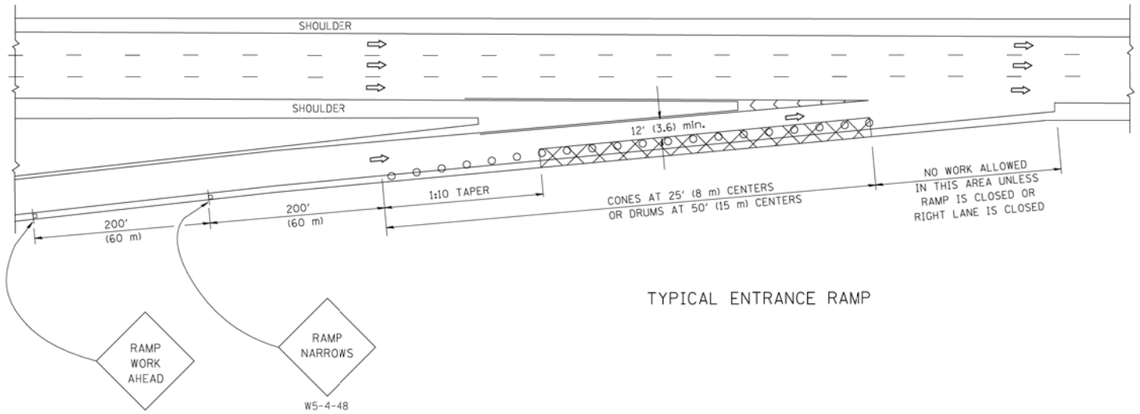

TYPICAL ENTRANCE RAMP

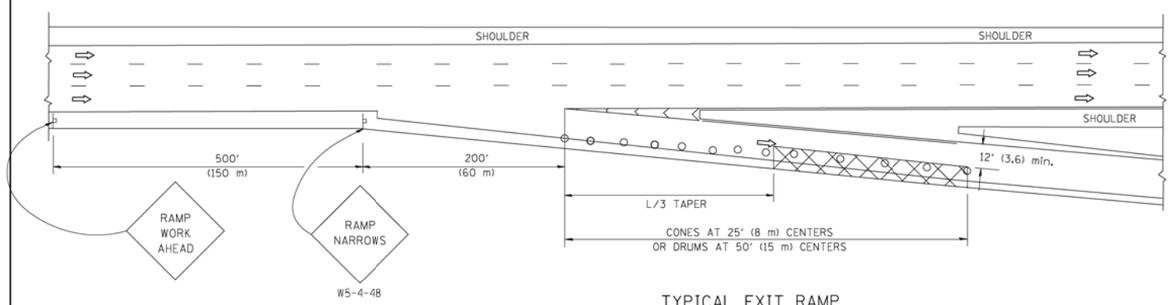

TYPICAL EXIT RAMP

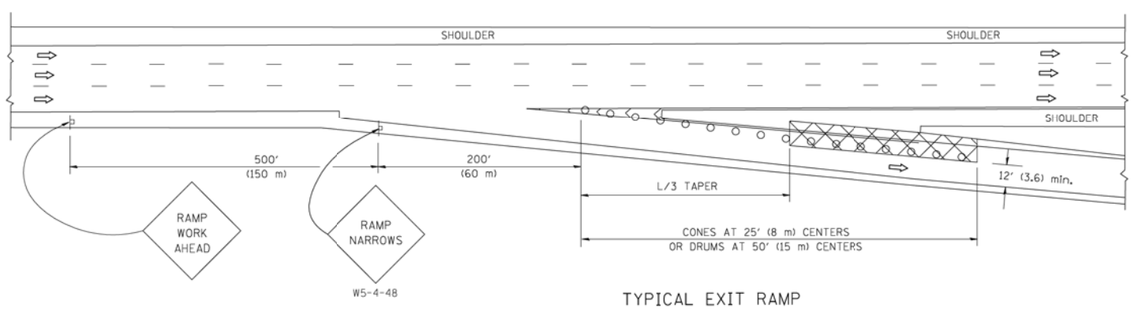

TYPICAL EXIT RAMP

SHOULDER CLOSURE DETAILS

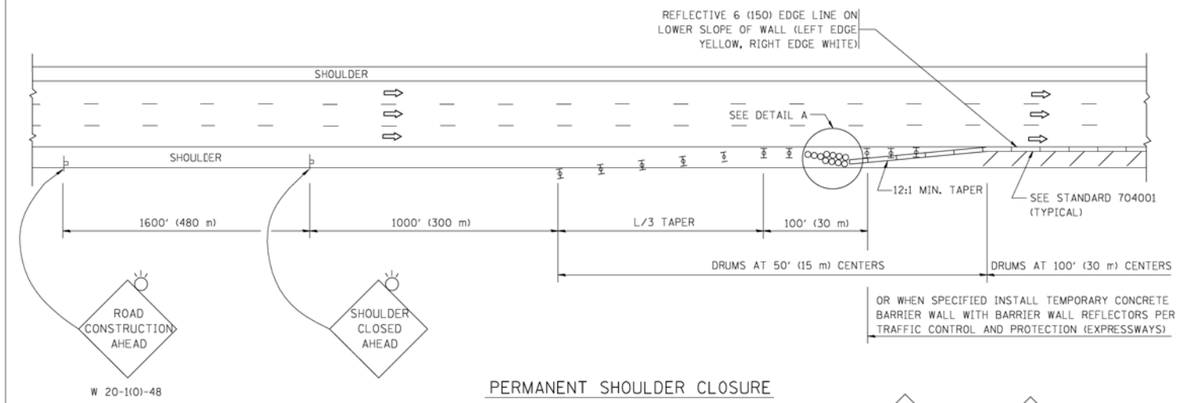

PERMANENT SHOULDER CLOSURE

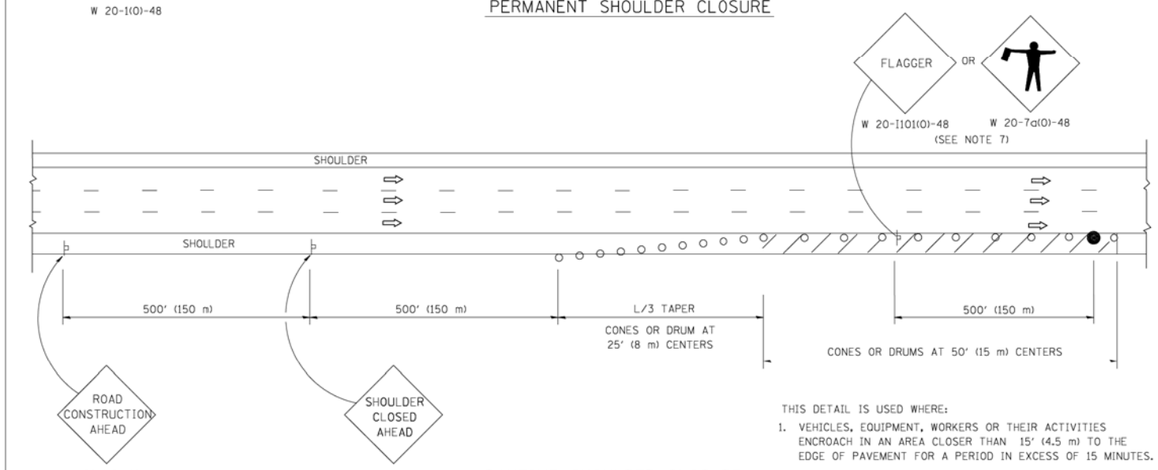

THIS DETAIL IS USED WHERE:

1. VEHICLES, EQUIPMENT, WORKERS OR THEIR ACTIVITIES ENCROACH IN AN AREA CLOSER THAN 15' (4.5 m) TO THE EDGE OF PAVEMENT FOR A PERIOD IN EXCESS OF 15 MINUTES.

DAYTIME SHOULDER CLOSURE

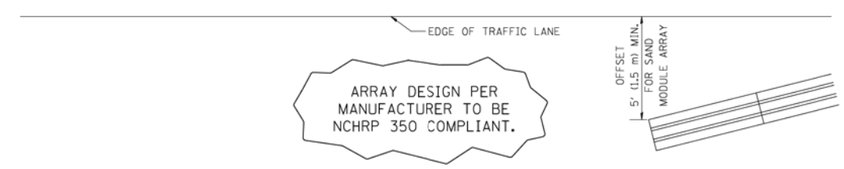

DETAIL "A"
IMPACT ATTENTUATOR, TEMPORARY
(SEE NOTE 5)

SYMBOLS

- ACTIVE WORK AREA
- SIGN ON PORTABLE OR PERMANENT SUPPORT
- FLAGGER WITH CONTROL SIGN
- TYPE II BARRICADE, DRUM OR VERTICAL BARRICADE WITH STEADY BURN MONO-DIRECTIONAL LIGHT
- CONE, DRUM OR BARRICADE

GENERAL NOTES

1. THE "L" DISTANCE EQUALS:

SPEED LIMIT	FORMULAS	
45 mph (80 km/h) OR GREATER:	METRIC	ENGLISH
	L=0.65(W)(S)	L=(W)(S)

W = WIDTH OF OFFSET IN FEET (METERS)
S = NORMAL POSTED SPEED MPH (KM/H)

2. PLASTIC DRUMS WITH HIGH PERFORMANCE REFLECTIVE SHEETING AND STEADY BURNING LIGHTS ARE REQUIRED FOR ALL NIGHTIME CLOSURES.
3. ALL SIGNS SHALL BE POST MOUNTED IF THE CLOSURE TIME EXCEEDS FOUR DAYS.
4. FLASHING LIGHTS SHALL BE USED DURING THE HOURS OF DARKNESS AND SHALL BE INSTALLED ABOVE THE FIRST TWO SETS OF SIGNS.
5. THE IMPACT ATTENTUATOR, TEMPORARY IS NOT REQUIRED WHEN THE TEMPORARY CONCRETE BARRIER WALL IS PROTECTED BY OR IS TIED INTO THE EXISTING GUARDRAIL. IF OFFSET IS LESS THAN 5 FEET USE NARROW USE TYPE DEVICE TO MEET NCHRP350.
6. AUTHORIZATION FROM THE DISTRICT'S BUREAU OF TRAFFIC IS REQUIRED FOR ALL FREEWAY CLOSURES.
7. THE FLAGGER AND FLAGGER SIGN ARE REQUIRED AT THE ABOVE WORK SITES WHEN:
   a. FOUR OR MORE WORK VEHICLES ENTER THE TRAFFIC LANES IN A ONE HOUR PERIOD.
   b. THE WORK AVTIVITY REQUIRES FREQUENT ENCROACHMENT INTO THE LANE OPEN TO TRAFFIC.

   THE FLAGGER SHALL BE STATIONED APPROXIMATELY 100' (30 m) TO 200' (60 m) IN ADVANCE OF THE WORKERS.

ALL DIMENSIONS ARE IN INCHES (MILLIMETERS) UNLESS OTHERWISE SHOWN.

FILE NAME = W:\diststd\22x34\tc17.dgn	USER NAME = leysa	DESIGNED -	REVISED - 04-03	STATE OF ILLINOIS DEPARTMENT OF TRANSPORTATION
		DRAWN - D.W.S.	REVISED - J.A.F. 12-06	
	PLOT SCALE = 50.0000 ' / IN.	CHECKED -	REVISED - S.P.B. 01-07	
	PLOT DATE = 1/26/2010	DATE - 11-96	REVISED - S.P.B. 12-09	

TRAFFIC CONTROL DETAILS FOR FREEWAY SHOULDER CLOSURES AND PARTIAL RAMP CLOSURES

SCALE: NONE | SHEET NO. 1 OF 1 SHEETS | STA. TO STA.

F.A.I. RTE.	SECTION	COUNTY	TOTAL SHEETS	SHEET NO.
94	2012-060-BR	COOK	285	257
	TC-17	CONTRACT NO. 60V61		

FED. ROAD DIST. NO. 1 | ILLINOIS | FED. AID PROJECT

SIGNING FOR FLAGGING OPERATIONS AT WORK ZONE OPENINGS

WORK ZONE EXIT OPENING

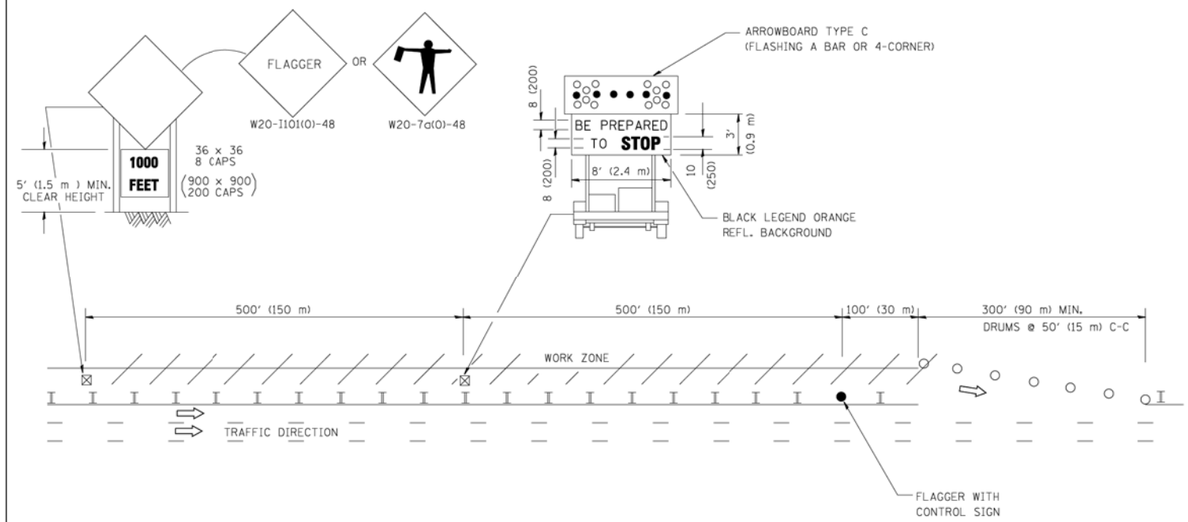

WORK ZONE ENTRY OPENING

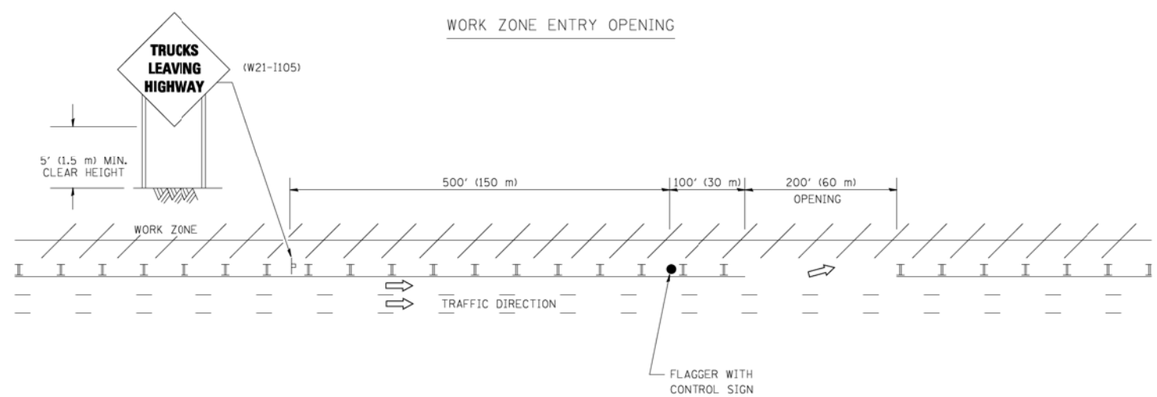

NOTES:

1. THE ARROWBOARD, THE FLAGGER AHEAD SIGN AND THE TRUCKS LEAVING HIGHWAY SIGN SHALL BE REMOVED OR TURNED AWAY FROM TRAFFIC AND THE EXIT AND ENTRY OPENINGS SHALL BE CLOSED WHEN THE FLAGGING OPERATION CEASES. NON OPERATING EQUIPMENT SHALL COMPLY WITH ARTICLE 701.11
2. WORK ZONE EXIT OPENINGS SHOULD BE A MINIMUM OF ONE HALF MILE APART.
3. EXITING THE WORK ZONE AT ANY PLACE OTHER THAN AT A WORK ZONE EXIT OPENING WILL BE PROHIBITED.
4. ALL VEHICLES SHALL ENTER THE WORK ZONE AT ENTRY OPENINGS, USING THEIR TURN SIGNALS TO WARN MOTORISTS

ALL DIMENSIONS ARE IN INCHES (MILLIMETERS) UNLESS OTHERWISE SHOWN

FILE NAME = W:\diststd\22x34\tc18.dgn	USER NAME = leyso	DESIGNED -	REVISED - J.A.F. 04-03	STATE OF ILLINOIS DEPARTMENT OF TRANSPORTATION
		DRAWN -	REVISED - J.A.F. 02-06	
	PLOT SCALE = 50.000 ' / IN.	CHECKED -	REVISED - S.P.B. 01-07	
	PLOT DATE = 1/26/2010	DATE -	REVISED - S.P.B. 12-09	

SIGNING FOR FLAGGING OPERATIONS AT WORK ZONE OPENINGS

SCALE: NONE | SHEET NO. 1 OF 1 SHEETS | STA. | TO STA.

F.A.I. RTE.	SECTION	COUNTY	TOTAL SHEETS	SHEET NO.
94	2012-060-BR	COOK	285	258
	TC-18	CONTRACT NO. 60V61		

FED. ROAD DIST. NO. 1 | ILLINOIS | FED. AID PROJECT

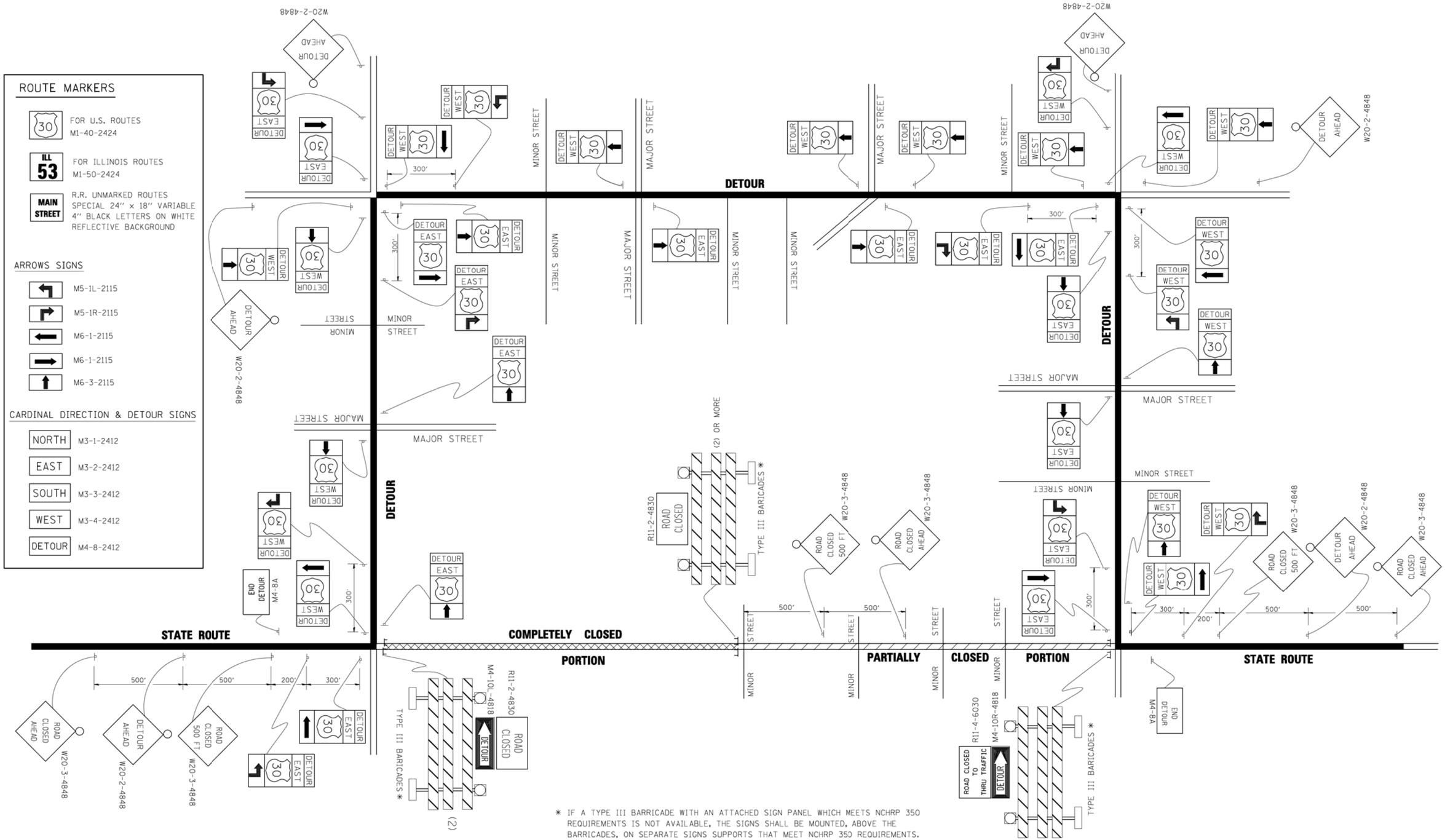

* IF A TYPE III BARICADE WITH AN ATTACHED SIGN PANEL WHICH MEETS NCHRP 350 REQUIREMENTS IS NOT AVAILABLE, THE SIGNS SHALL BE MOUNTED, ABOVE THE BARRICADES, ON SEPARATE SIGNS SUPPORTS THAT MEET NCHRP 350 REQUIREMENTS.

FILE NAME = c:\pw_work\PWIDOT\DRIVAKOSGN\d0103115\tc21.dgn	USER NAME = drivakosgn	DESIGNED -	REVISED - 10-18-02
		DRAWN -	REVISED - R. BORO 09-14-09
	PLOT SCALE = 49.9999 ' / IN.	CHECKED -	REVISED -
	PLOT DATE = 9/14/2009	DATE -	REVISED -

STATE OF ILLINOIS
DEPARTMENT OF TRANSPORTATION

DETOUR SIGNING
FOR CLOSING STATE HIGHWAYS

SCALE: NONE | SHEET NO. 1 OF 1 SHEETS | STA. | TO STA.

F.A.I. RTE.	SECTION	COUNTY	TOTAL SHEETS	SHEET NO.
94	2012-060-BR	COOK	285	259
	TC-21	CONTRACT NO. 60V61		

FED. ROAD DIST. NO. 1 | ILLINOIS | FED. AID PROJECT

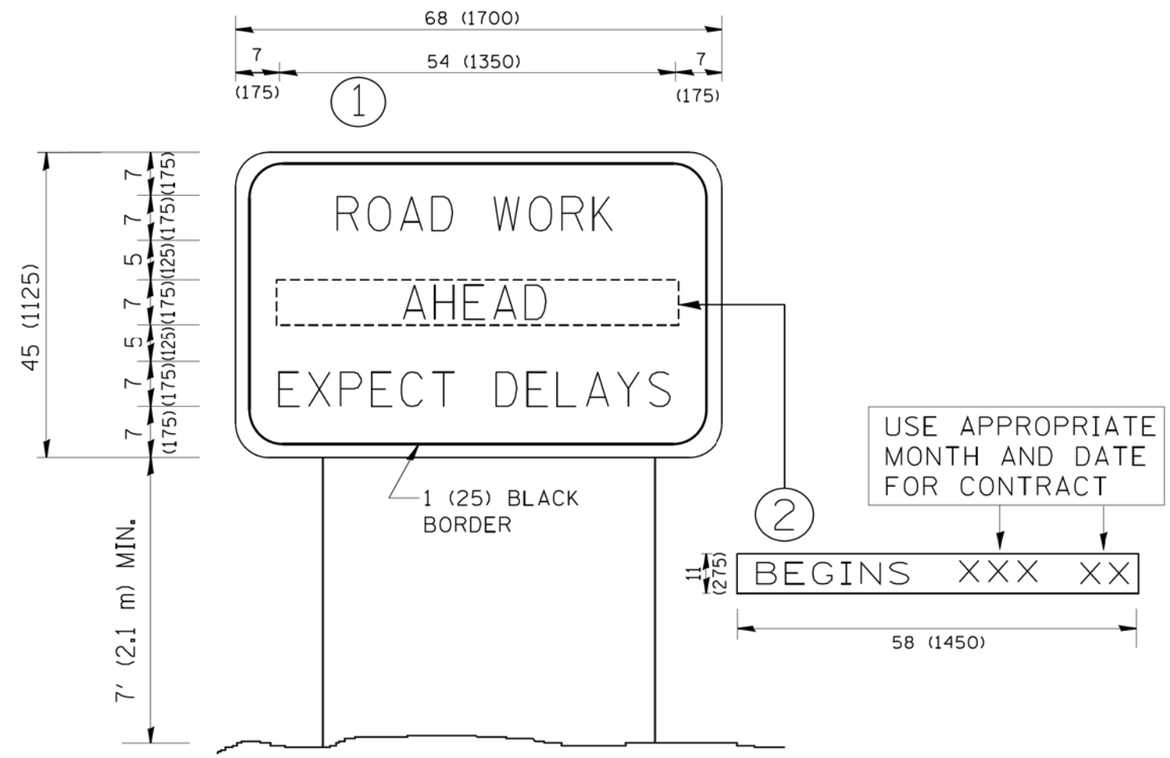

NOTES:

1. USE BLACK LETTERING ON ORANGE BACKGROUND.
2. ERECT SIGNS IN ADVANCE OF THE LOCATION FOR THE "ROAD CONSTRUCTION AHEAD" SIGN AT LOCATIONS AS DIRECTED BY THE ENGINEER.
3. ERECT SIGN 1 WITH INSTALLED PANEL 2 ONE WEEK PRIOR TO THE START OF CONSTRUCTION.
4. REMOVE PANEL 2 SOON AFTER THE START OF CONSTRUCTION.
5. SEE SPECIAL PROVISION FOR "TEMPORARY INFORMATION SIGNING" FOR ADDITIONAL INFORMATION.
6. ONE SIGN ASSEMBLY EQUALS 25.70 SQ. FT. (2.3 SQ. M.)
7. SHALL BE PAID FOR AS TEMPORARY INFORMATION SIGNING.

ALL DIMENSIONS ARE IN INCHES (MILLIMETERS) UNLESS OTHERWISE SHOWN.

FILE NAME = W:\diststd\22x34\tc22.dgn	USER NAME = gaglianobt	DESIGNED -	REVISED - R. MIRS 09-15-97	STATE OF ILLINOIS DEPARTMENT OF TRANSPORTATION	ARTERIAL ROAD INFORMATION SIGN
		DRAWN -	REVISED - R. MIRS 12-11-97		
	PLOT SCALE = 50.000 ' / IN.	CHECKED -	REVISED - T. RAMMACHER 02-02-99		
	PLOT DATE = 1/4/2008	DATE -	REVISED - C. JUCIUS 01-31-07		SCALE: NONE SHEET NO. 1 OF 1 SHEETS STA. TO STA.

F.A.I. RTE.	SECTION	COUNTY	TOTAL SHEETS	SHEET NO.
94	2012-060-BR	COOK	285	260
	TC-22	CONTRACT NO. 60V61		
FED. ROAD DIST. NO. 1	ILLINOIS	FED. AID PROJECT		

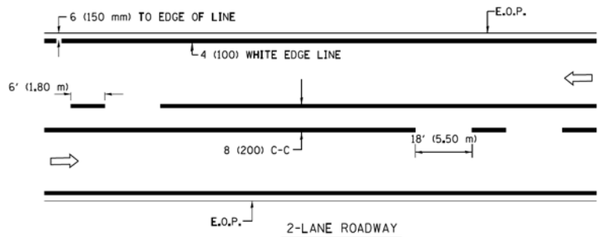

2-LANE ROADWAY

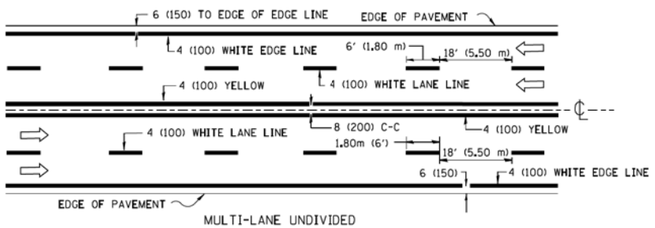

MULTI-LANE UNDIVIDED

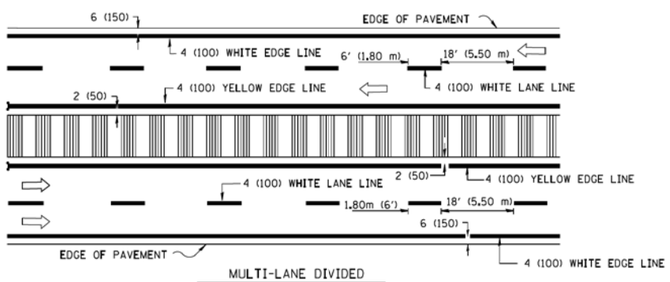

MULTI-LANE DIVIDED
WITH MOUNTABLE MEDIAN

NOTE: MEDIANS WITH BARRIER CURB DO NOT REQUIRE AN EDGE LINE

TYPICAL LANE AND EDGE LINE MARKING

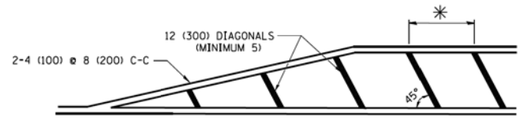

* FOR MEDIAN LENGTHS WHERE DIAGONAL SPACING CANNOT BE ATTAINED, USE 5 (FIVE) EQUALLY SPACED DIAGONAL LINES.

* DIAGONAL LINE SPACING: 20' (6.1 m) C-C

PAINTED MEDIANS

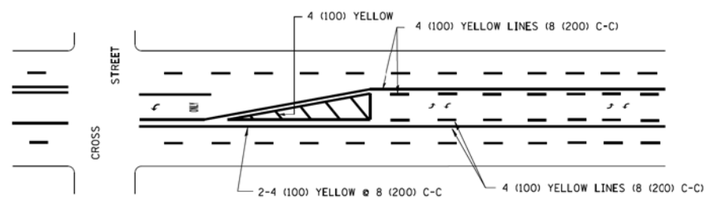

A MINIMUM OF TWO PAIRS OF TURN ARROWS SHALL BE USED, WHITE IN COLOR. ADDITIONAL PAIRS SHALL BE PLACED AT 200' (60 m) TO 300' (90 m) INTERVALS.

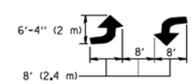

MEDIAN WITH TWO-WAY LEFT TURN LANE

TYPICAL PAINTED MEDIAN MARKING

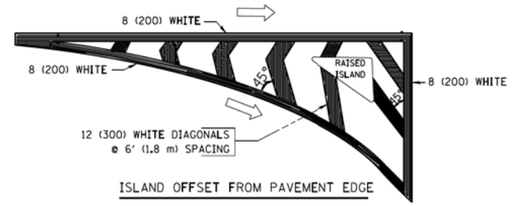

ISLAND OFFSET FROM PAVEMENT EDGE

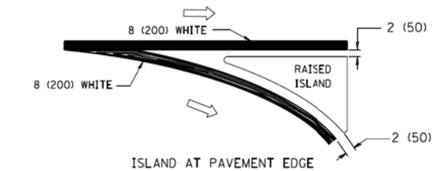

ISLAND AT PAVEMENT EDGE

TYPICAL ISLAND MARKING

TYPE OF MARKING	WIDTH OF LINE	PATTERN	COLOR	SPACING / REMARKS
CENTERLINE ON 2 LANE PAVEMENT	4 (100)	SKIP-DASH	YELLOW	6' (1.80 m) LINE WITH 18' (5.50 m) SPACE
CENTERLINE ON MULTI-LANE UNDIVIDED PAVEMENT	2 @ 4 (100)	SOLID	YELLOW	8 (200) C-C
NO PASSING ZONE LINES: FOR ONE DIRECTION FOR BOTH DIRECTIONS	4 (100) 2 @ 4 (100)	SOLID SOLID	YELLOW YELLOW	8 (200) C-C
LANE LINES	4 (100) 5 (125) ON FREEWAYS	SKIP-DASH SKIP-DASH	WHITE WHITE	6' (1.80 m) LINE WITH 18' (5.50 m) SPACE
DOTTED LINES (EXTENSIONS OF CENTER, LANE OR TURN LANE MARKINGS)	SAME AS LINE BEING EXTENDED	SKIP-DASH	SAME AS LINE BEING EXTENDED	2' (600) LINE WITH 6' (1.8) SPACE
EDGE LINES	4 (100)	SOLID	YELLOW-LEFT WHITE-RIGHT	OUTLINE MOUNTABLE MEDIANS IN YELLOW; EDGE LINES ARE NOT USED NEXT TO BARRIER CURB
TURN LANE MARKINGS	6 (150) LINE; FULL SIZE LETTERS & SYMBOLS (8' (2.4 m))	SOLID	WHITE	SEE TYPICAL TURN LANE MARKING DETAIL
TWO WAY LEFT TURN MARKING	2 @ 4 (100) EACH DIRECTION 8' (2.4 m) LEFT ARROW	SKIP-DASH AND SOLID IN PAIRS	YELLOW WHITE	6' (1.8 m) LINE WITH 18' (5.50 m) SPACE FOR SKIP-DASH; 8 (200) C-C BETWEEN SOLID LINE AND SKIP-DASH LINE SEE TYPICAL TWO-WAY LEFT TURN MARKING DETAIL
CROSSWALK LINES A. DIAGONALS (BIKE & EQUESTRIAN) B. LONGITUDINAL BARS (SCHOOL & PEDESTRIAN)	12 (300) @ 45° 24 (600) @ 90°	SOLID SOLID	WHITE WHITE	2' (600) APART 2' (600) APART SEE TYPICAL CROSSWALK MARKING DETAILS.
STOP LINES	24 (600)	SOLID	WHITE	PLACE 4' (1.2 m) IN ADVANCE OF AND PARALLEL TO CROSSWALK, IF PRESENT. OTHERWISE, PLACE AT DESIRED STOPPING POINT. PARALLEL TO CROSSROAD CENTERLINE, WHERE POSSIBLE
PAINTED MEDIANS	2 @ 4 (100) WITH 12 (300) DIAGONALS @ 45°	SOLID	YELLOW: TWO WAY TRAFFIC WHITE: ONE WAY TRAFFIC	8 (200) C-C FOR THE DOUBLE LINE SEE TYPICAL PAINTED MEDIAN MARKING.
GORE MARKING AND CHANNELIZING LINES	8 (200) WITH 12 (300) DIAGONALS @ 45°	SOLID	WHITE	DIAGONALS: 20' (6.1 m) (LESS THAN 30 MPH (50 km/h))
RAILROAD CROSSING	24 (600) TRANSVERSE LINES; "RR" IS 6' (1.8 m) LETTERS; 16 (400) LINE FOR "X"	SOLID	WHITE	SEE STATE STANDARD 780001 AREA OF: "R"=3.6 SQ. FT. (0.33m^2) EACH "X"=54.0 SQ. FT. (5.0 m^2)

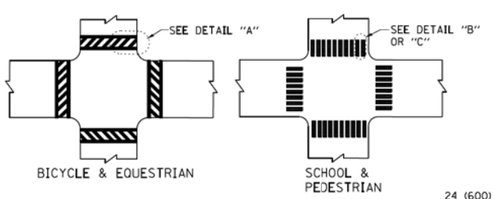

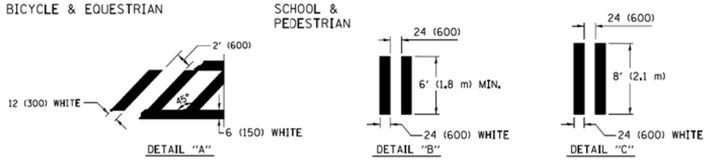

TYPICAL CROSSWALK MARKING

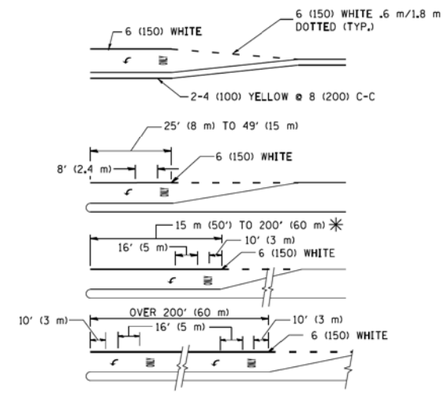

FULL SIZE LETTERS 8' (2.4 m) AND ARROWS SHALL BE USED.
↰ AREA = 15.8 SQ. FT. (1.47 m^2) ONLY AREA = 22.9 SQ. FT. (2.13 m^2)

* TURN LANES IN EXCESS OF 400' (120 m) IN LENGTH MAY HAVE AN ADDITIONAL SET OF ARROW - "ONLY" INSTALLED MIDWAY BETWEEN THE OTHER TWO SETS OF ARROW - "ONLY".

TYPICAL LEFT (OR RIGHT) TURN LANE

TYPICAL TURN LANE MARKING

FOR FURTHER DETAILS ON PAVEMENT MARKING REFER TO STREET MARKING STANDARDS, PRINTED BY CITY OF CHICAGO, DEPARTMENT OF TRANSPORTATION, BUREAU OF TRAFFIC.

ALL DIMENSIONS ARE IN INCHES (MILLIMETERS) UNLESS OTHERWISE SHOWN.

FILE NAME = c:\pw_work\pwidot\drivakosgn\d0108315\tc24.dgn	USER NAME = drivakosgn	DESIGNED -	REVISED - T. RAMMACHER 12-07-00	STATE OF ILLINOIS DEPARTMENT OF TRANSPORTATION
		DRAWN -	REVISED - K. ENG 02-28-12	
	PLOT SCALE = 50.000 ' / in.	CHECKED -	REVISED -	
	PLOT DATE = 3/1/2012	DATE -	REVISED -	

CITY OF CHICAGO
TYPICAL PAVEMENT MARKINGS

SCALE: NONE | SHEET NO. 1 OF 3 SHEETS | STA. TO STA.

F.A.I. RTE.	SECTION	COUNTY	TOTAL SHEETS	SHEET NO.
94	2012-060-BR	COOK	285	261
	TC-24	CONTRACT NO. 60V61		

FED. ROAD DIST. NO. 1 | ILLINOIS | FED. AID PROJECT

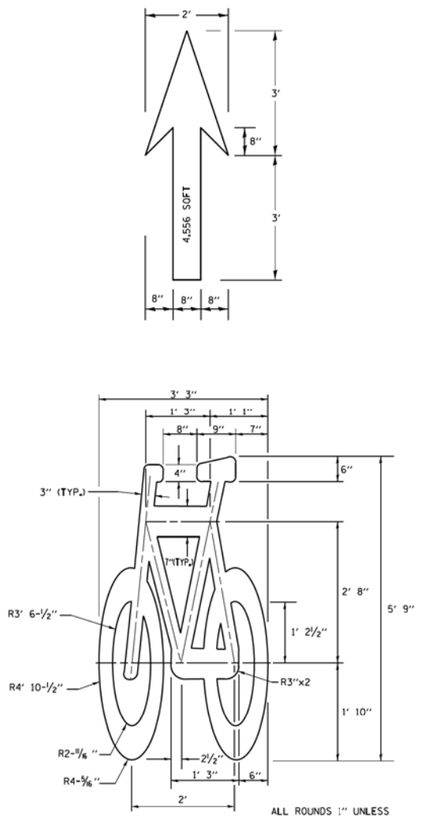

BICYCLE LANE SYMBOL

ALL ROUNDS 1" UNLESS OTHERWISE NOTED.

NOTE:

1.) FOR BIKE LANE SYMBOLS ONLY, USE PRE-FORMED THERMOPLASTIC WITH A MINIMUM THICKNESS OF 90 MILS, MINIMUM SKID RESISTANCE VALUE OF 60 BPN, & A MINIMUM INDEX OF REFRACTION OF 1.50.

2.) THE RESIDENT ENGINEER SHALL CONTACT MR. BEN GOMBERG AT 312-744-8093 AT LEAST ONE CALENDAR WEEK PRIOR TO INSTALLING BIKE LANE SYMBOLS.

TYPICAL BIKE LANE SYMBOLS
DRAWING #28

DRAWING #29

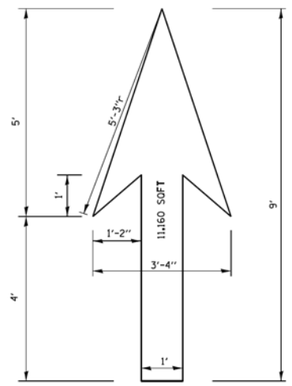

DRAWING #30

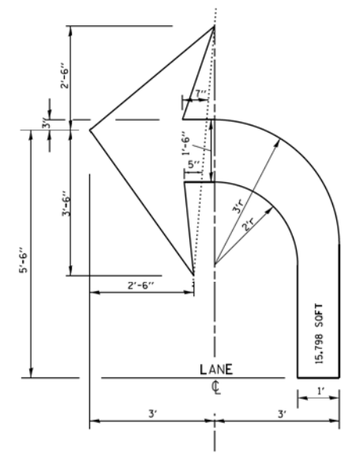

DRAWING #31

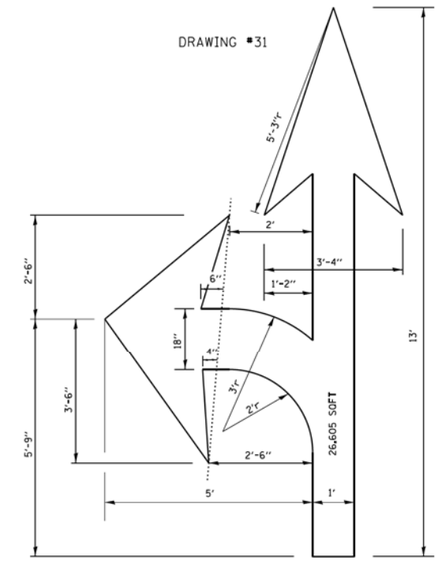

DRAWING #32

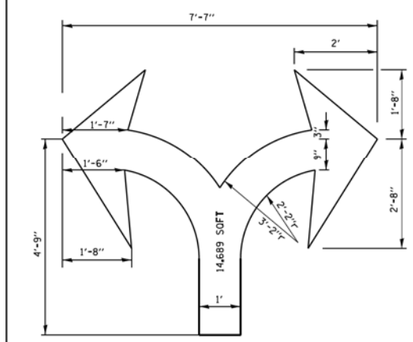

DRAWING #33

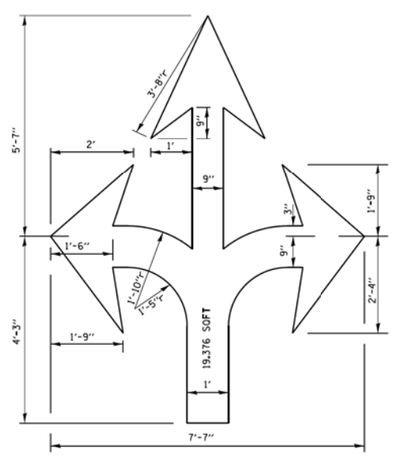

DRAWING #34

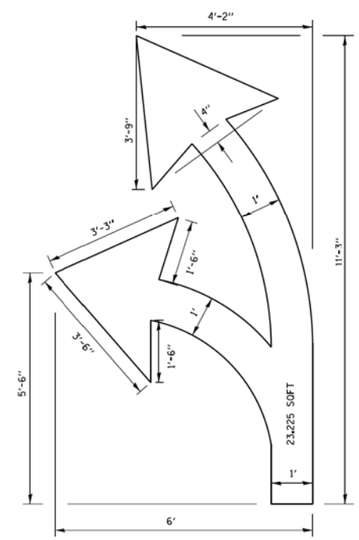

DRAWING #35

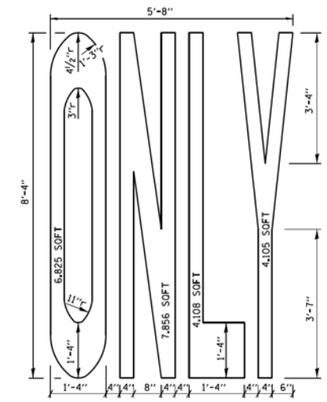

NOTE:

ALL MARKINGS SHALL BE SOLID WHITE UNLESS OTHERWISE NOTED IN THE PLANS

FILE NAME = c:\pw_work\pwidot\drivakosgn\d0108315\tc24.dgn	USER NAME = drivakosgn	DESIGNED -	REVISED - T. RAMMACHER 12-07-00	STATE OF ILLINOIS DEPARTMENT OF TRANSPORTATION
		DRAWN -	REVISED - K. ENG 02-28-12	
	PLOT SCALE = 50.000 ' / in.	CHECKED -	REVISED -	
	PLOT DATE = 3/29/2012	DATE -	REVISED -	

CITY OF CHICAGO
TYPICAL PAVEMENT MARKINGS

SCALE: NONE | SHEET NO. 2 OF 3 SHEETS | STA. TO STA.

F.A.I. RTE.	SECTION	COUNTY	TOTAL SHEETS	SHEET NO.
94	2012-060-BR	COOK	285	262
	TC-24	CONTRACT NO. 60V61		
FED. ROAD DIST. NO. 1	ILLINOIS	FED. AID PROJECT		

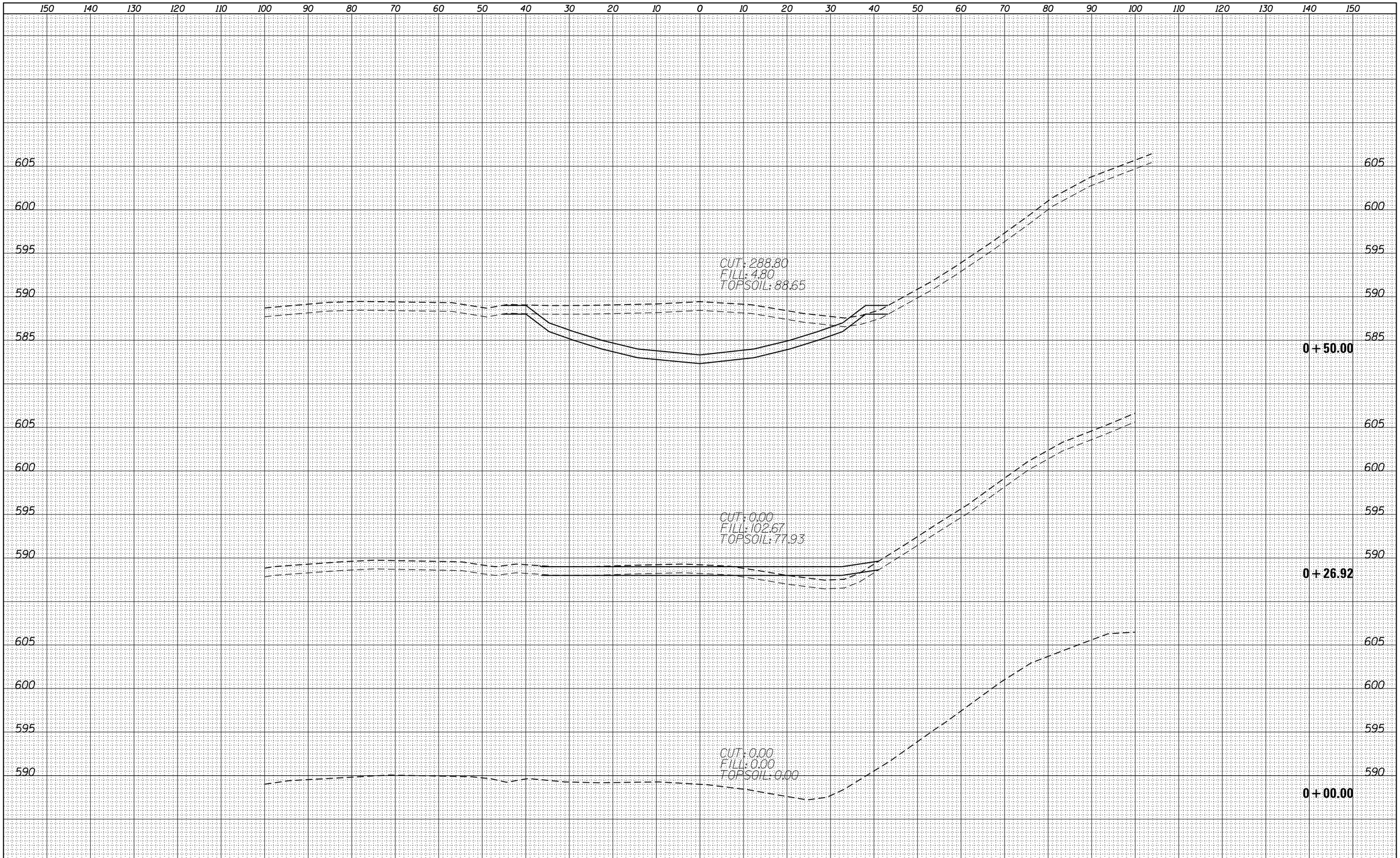

FINAL SURVEY		BY	DATE
NOTE BOOK	SURVEYED		
	PLOTTED		
	TEMPLATE		
	AREAS		
NO.	AREAS CHECKED		

ORIGINAL SURVEY		BY	DATE
NOTE BOOK	SURVEYED		
	PLOTTED		
	TEMPLATE		
	AREAS		
NO.	AREAS CHECKED		

FILE NAME = $FILEL$	USER NAME = default	DESIGNED - PTG	REVISED -
		DRAWN - PTG	REVISED -
	PLOT SCALE = $SCALE$	CHECKED -	REVISED -
	PLOT DATE = 12/7/2012	DATE -	REVISED -

STATE OF ILLINOIS
DEPARTMENT OF TRANSPORTATION

DETENTION BASIN F
CROSS SECTION SHEET

SCALE: | SHEET 1 OF 12 SHEETS | STA. +00.00 TO STA. +50.00

F.A.I. RTE.	SECTION	COUNTY	TOTAL SHEETS	SHEET NO.
94	2012-060-BR	COOK	285	263

CONTRACT NO. 60V61

ILLINOIS FED. AID PROJECT

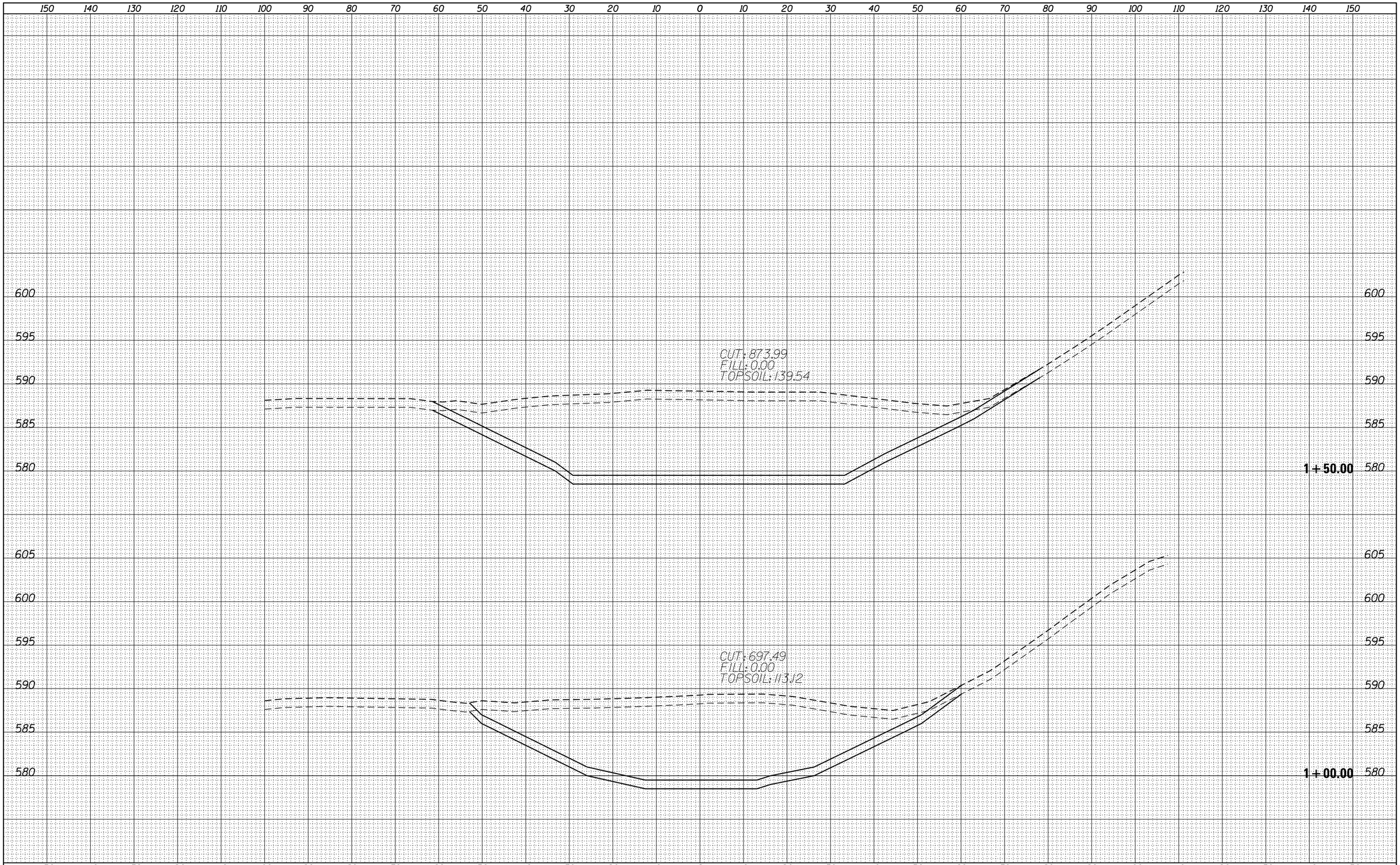

FINAL SURVEY		BY	DATE
NOTE BOOK	SURVEYED		
	PLOTTED		
	TEMPLATE		
	AREAS		
NO.	AREAS CHECKED		

ORIGINAL SURVEY		BY	DATE
NOTE BOOK	SURVEYED		
	PLOTTED		
	TEMPLATE		
	AREAS		
NO.	AREAS CHECKED		

FILE NAME = $FILEL$	USER NAME = default	DESIGNED - PTG	REVISED -
		DRAWN - PTG	REVISED -
	PLOT SCALE = $SCALE$	CHECKED -	REVISED -
	PLOT DATE = 12/7/2012	DATE -	REVISED -

STATE OF ILLINOIS
DEPARTMENT OF TRANSPORTATION

DETENTION BASIN F
CROSS SECTION SHEET

SCALE: | SHEET 2 OF 124 SHEETS | STA. 1+00.00 TO STA. 1+50.00

F.A.I. RTE.	SECTION	COUNTY	TOTAL SHEETS	SHEET NO.
94	2012-060-BR	COOK	285	264

CONTRACT NO. 60V61

ILLINOIS FED. AID PROJECT

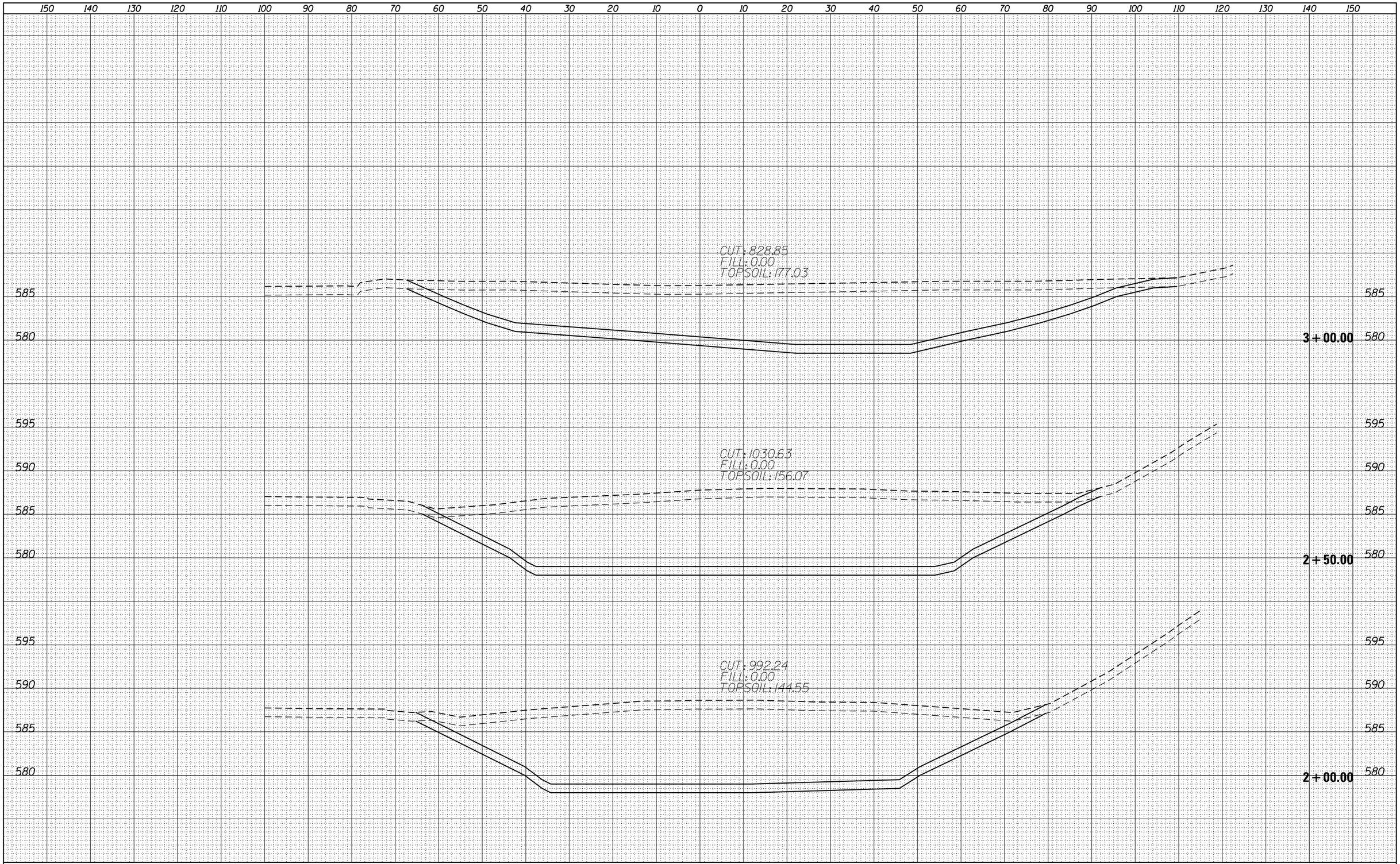

FINAL SURVEY		BY	DATE
NOTE BOOK	SURVEYED		
	PLOTTED		
	TEMPLATE		
	AREAS		
NO.	AREAS CHECKED		

ORIGINAL SURVEY		BY	DATE
NOTE BOOK	SURVEYED		
	PLOTTED		
	TEMPLATE		
	AREAS		
NO.	AREAS CHECKED		

FILE NAME = $FILEL$	USER NAME = default	DESIGNED - PTG	REVISED -
		DRAWN - PTG	REVISED -
	PLOT SCALE = $SCALE$	CHECKED -	REVISED -
	PLOT DATE = 12/7/2012	DATE -	REVISED -

STATE OF ILLINOIS
DEPARTMENT OF TRANSPORTATION

DETENTION BASIN F
CROSS SECTION SHEET

SCALE: | SHEET 3 OF 12 SHEETS | STA. 2+00.00 TO STA. 3+00.00

F.A.I. RTE.	SECTION	COUNTY	TOTAL SHEETS	SHEET NO.
94	2012-060-BR	COOK	285	265

CONTRACT NO. 60V61

ILLINOIS FED. AID PROJECT

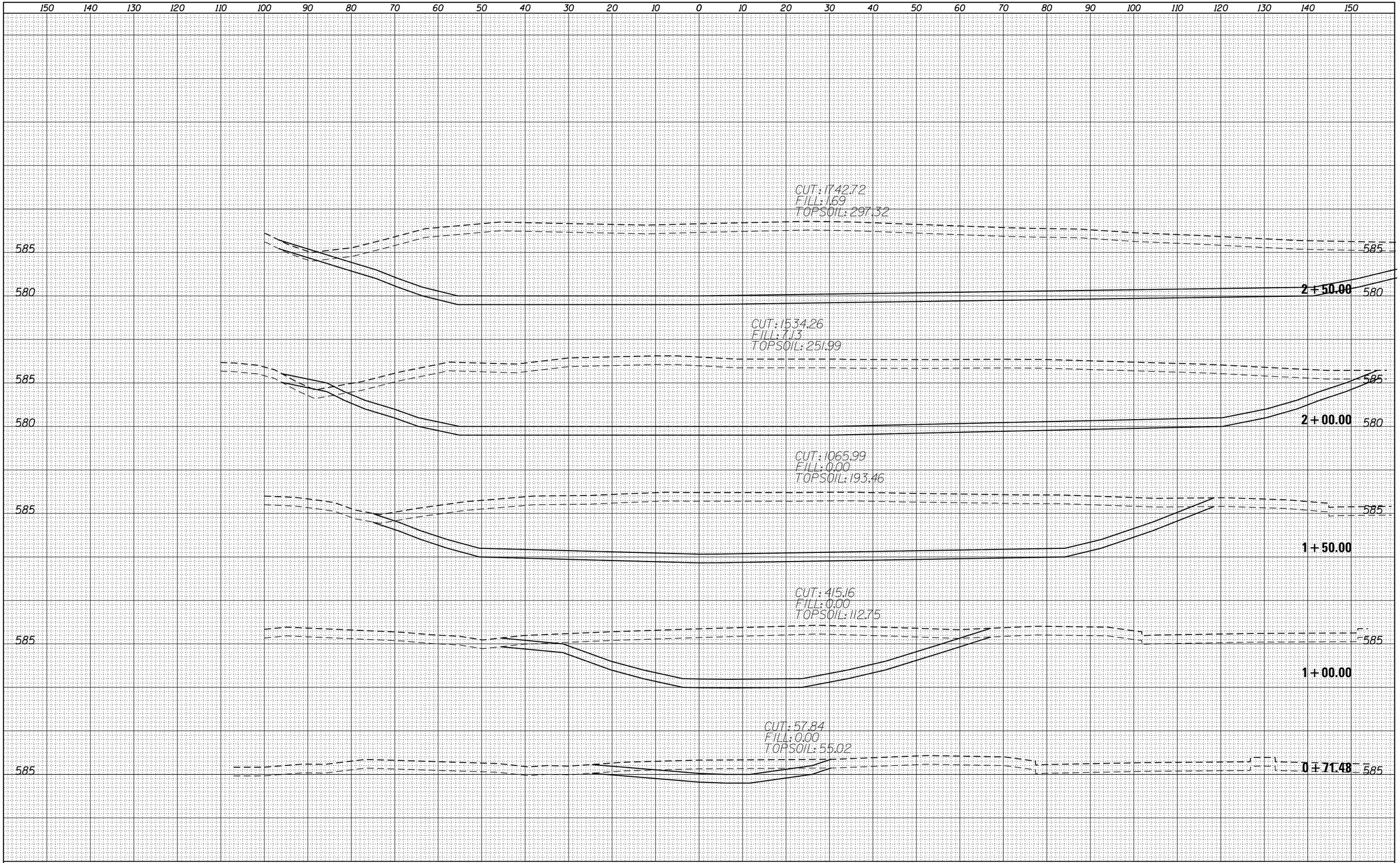

FINAL SURVEY		BY	DATE
NOTE BOOK	SURVEYED		
	PLOTTED		
	TEMPLATE		
	AREAS		
NO.	AREAS CHECKED		

ORIGINAL SURVEY		BY	DATE
NOTE BOOK	SURVEYED		
	PLOTTED		
	TEMPLATE		
	AREAS		
NO.	AREAS CHECKED		

FILE NAME = $FILEL$	USER NAME = default	DESIGNED - PTG	REVISED -
		DRAWN - PTG	REVISED -
	PLOT SCALE = $SCALE$	CHECKED -	REVISED -
	PLOT DATE = 12/7/2012	DATE -	REVISED -

STATE OF ILLINOIS
DEPARTMENT OF TRANSPORTATION

DETENTION BASIN H2
CROSS SECTION SHEET

SCALE: | SHEET 4 OF 12 SHEETS | STA. 2+00.00 TO STA. 3+00.00

F.A.I. RTE.	SECTION	COUNTY	TOTAL SHEETS	SHEET NO.
94	2012-060-BR	COOK	285	266

CONTRACT NO. 60V61

ILLINOIS FED. AID PROJECT

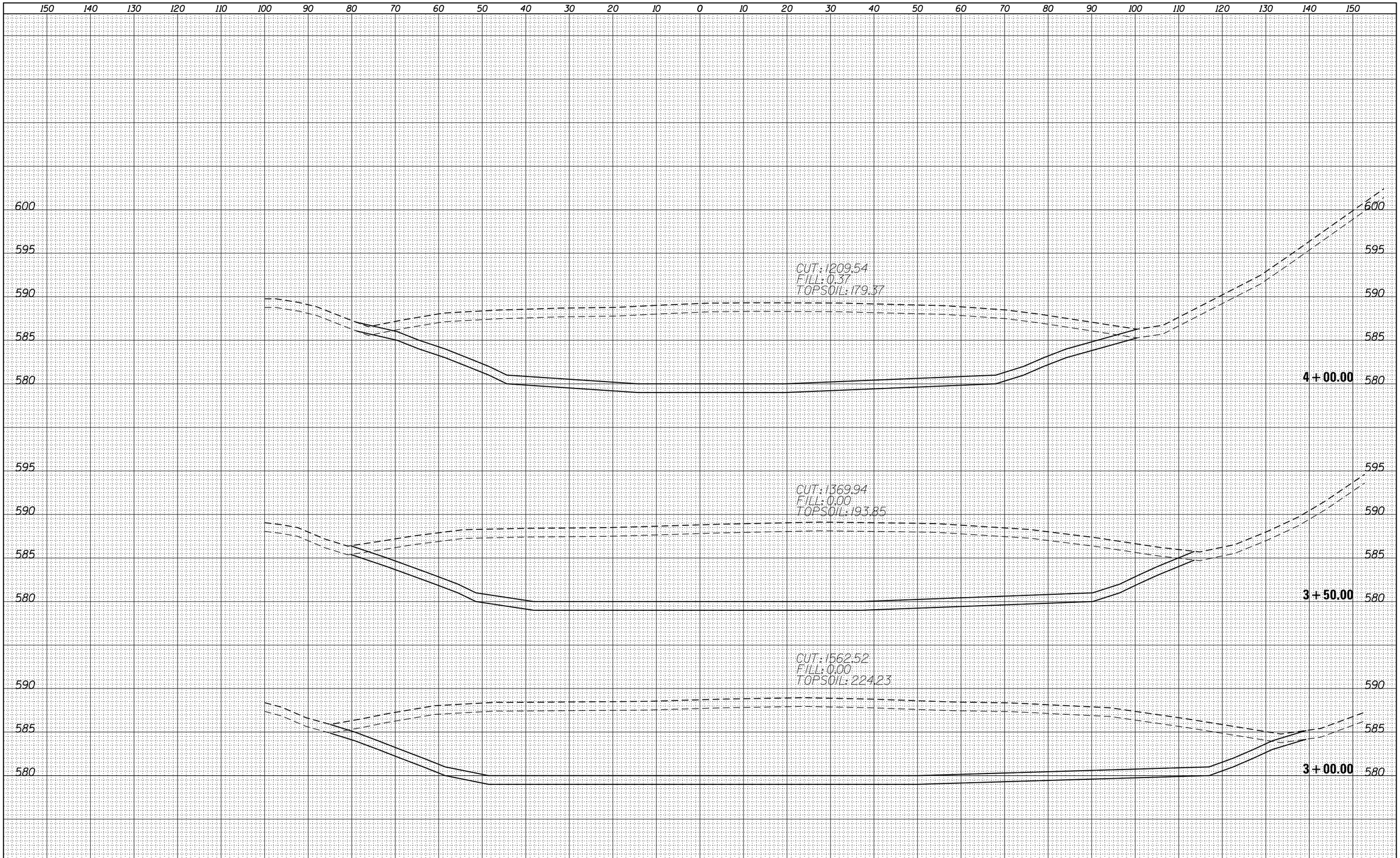

FINAL SURVEY		BY	DATE
NOTE BOOK	SURVEYED		
	PLOTTED		
	TEMPLATE		
	AREAS		
NO.	AREAS CHECKED		

ORIGINAL SURVEY		BY	DATE
NOTE BOOK	SURVEYED		
	PLOTTED		
	TEMPLATE		
	AREAS		
NO.	AREAS CHECKED		

FILE NAME = $FILEL$	USER NAME = default	DESIGNED - PTG	REVISED -
		DRAWN - PTG	REVISED -
	PLOT SCALE = $SCALE$	CHECKED -	REVISED -
	PLOT DATE = 12/7/2012	DATE -	REVISED -

STATE OF ILLINOIS
DEPARTMENT OF TRANSPORTATION

DETENTION BASIN H2
CROSS SECTION SHEET

SCALE: | SHEET 5 OF 12 SHEETS | STA. 3+00.00 TO STA. 4+00.00

F.A.I. RTE.	SECTION	COUNTY	TOTAL SHEETS	SHEET NO.
94	2012-060-BR	COOK	285	267

CONTRACT NO. 60V61

ILLINOIS FED. AID PROJECT

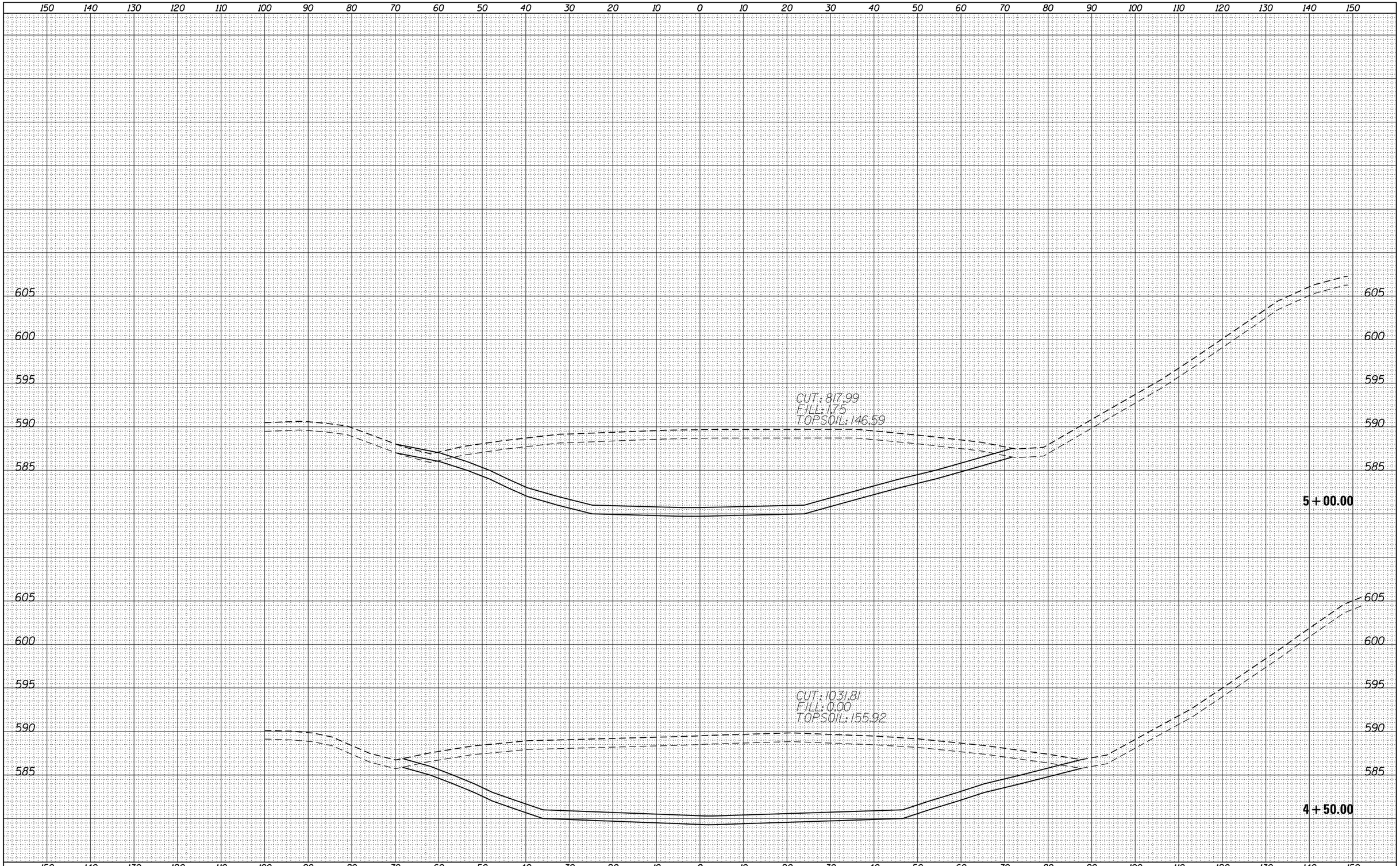

FINAL SURVEY	BY	DATE
SURVEYED		
PLOTTED		
TEMPLATE		
AREAS		
AREAS CHECKED		
NOTE BOOK NO.		

ORIGINAL SURVEY	BY	DATE
SURVEYED		
PLOTTED		
TEMPLATE		
AREAS		
AREAS CHECKED		
NOTE BOOK NO.		

FILE NAME = $FILEL$	USER NAME = default	DESIGNED - PTG	REVISED -
		DRAWN - PTG	REVISED -
	PLOT SCALE = $SCALE$	CHECKED -	REVISED -
	PLOT DATE = 12/7/2012	DATE -	REVISED -

STATE OF ILLINOIS
DEPARTMENT OF TRANSPORTATION

DETENTION BASIN H2
CROSS SECTION SHEET

SCALE: | SHEET 6 OF 12 SHEETS | STA. 4+50.00 TO STA. 5+00.00

F.A.I. RTE.	SECTION	COUNTY	TOTAL SHEETS	SHEET NO.
94	2012-060-BR	COOK	285	268

CONTRACT NO. 60V61

ILLINOIS FED. AID PROJECT

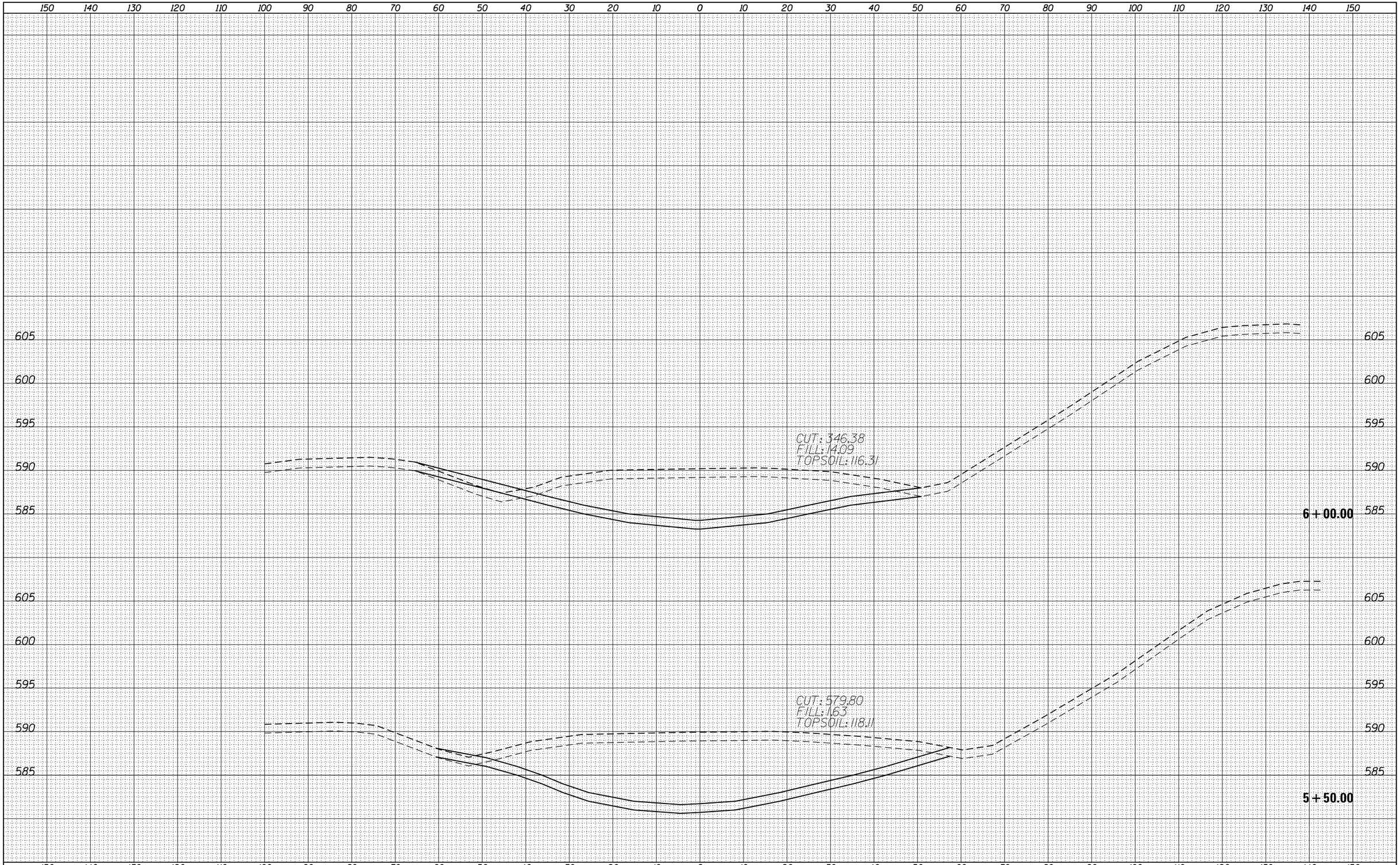

FINAL SURVEY		BY	DATE
NOTE BOOK	SURVEYED		
	PLOTTED		
	TEMPLATE		
	AREAS		
NO.	AREAS CHECKED		

ORIGINAL SURVEY		BY	DATE
NOTE BOOK	SURVEYED		
	PLOTTED		
	TEMPLATE		
	AREAS		
NO.	AREAS CHECKED		

FILE NAME = $FILEL$	USER NAME = default	DESIGNED - PTG	REVISED -
		DRAWN - PTG	REVISED -
	PLOT SCALE = $SCALE$	CHECKED -	REVISED -
	PLOT DATE = 12/7/2012	DATE -	REVISED -

STATE OF ILLINOIS
DEPARTMENT OF TRANSPORTATION

DETENTION BASIN H2
CROSS SECTION SHEET

SCALE: | SHEET 7 OF 12 SHEETS | STA. 5+50.00 TO STA. 6+00.00

F.A.I. RTE.	SECTION	COUNTY	TOTAL SHEETS	SHEET NO.
94	2012-060-BR	COOK	285	269

CONTRACT NO. 60V61

ILLINOIS FED. AID PROJECT

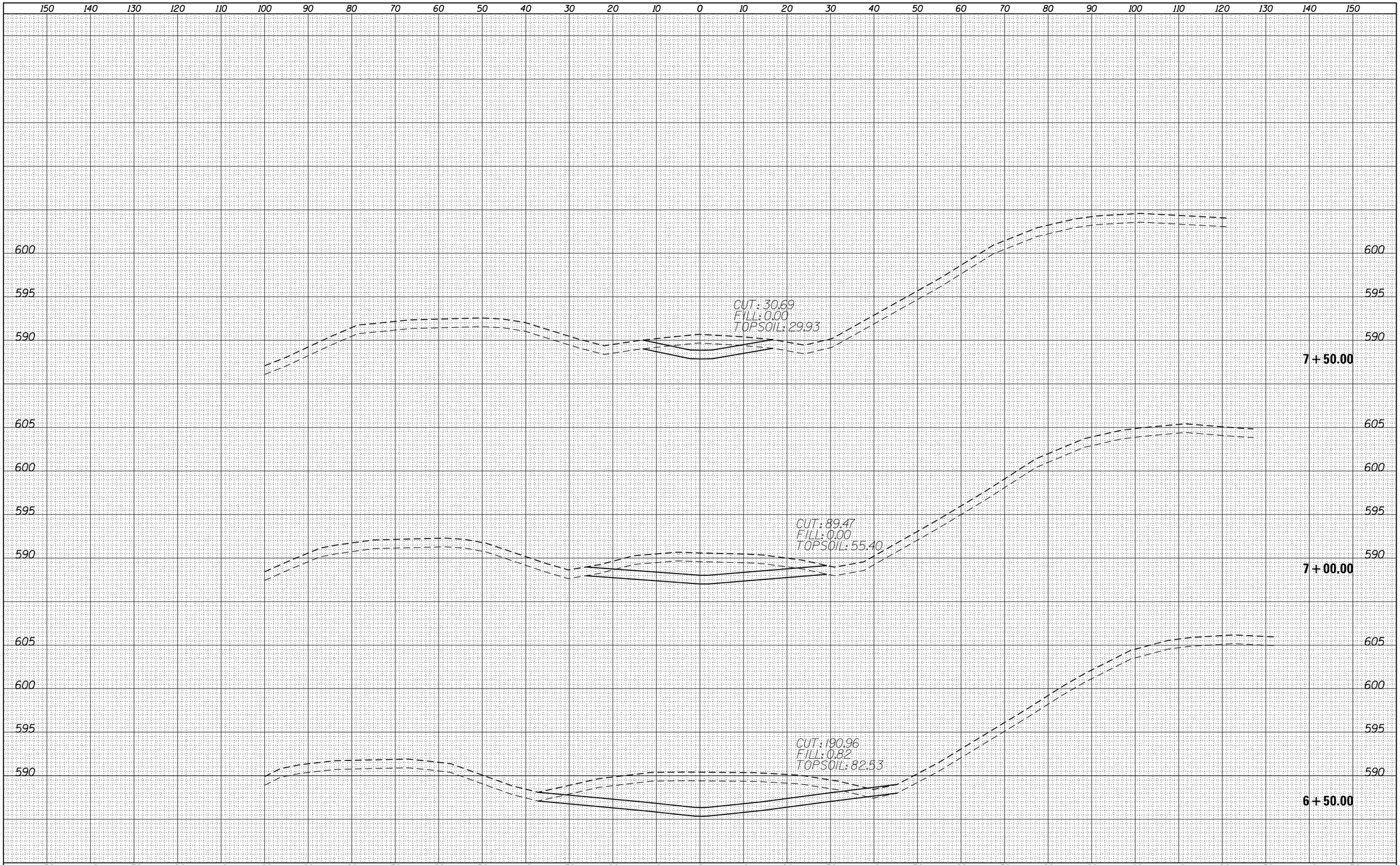

FINAL SURVEY		BY	DATE
NOTE BOOK	SURVEYED		
	PLOTTED		
	TEMPLATE		
	AREAS		
NO.	AREAS CHECKED		

ORIGINAL SURVEY		BY	DATE
NOTE BOOK	SURVEYED		
	PLOTTED		
	TEMPLATE		
	AREAS		
NO.	AREAS CHECKED		

FILE NAME = $FILEL$	USER NAME = default	DESIGNED - PTG	REVISED -
		DRAWN - PTG	REVISED -
	PLOT SCALE = $SCALE$	CHECKED -	REVISED -
	PLOT DATE = 12/7/2012	DATE -	REVISED -

STATE OF ILLINOIS
DEPARTMENT OF TRANSPORTATION

DETENTION BASIN H2
CROSS SECTION SHEET

SCALE: | SHEET 8 OF 12 SHEETS | STA. 6+50.00 TO STA. 7+50.00

F.A.I. RTE.	SECTION	COUNTY	TOTAL SHEETS	SHEET NO.
94	2012-060-BR	COOK	285	270

CONTRACT NO. 60V61

ILLINOIS FED. AID PROJECT

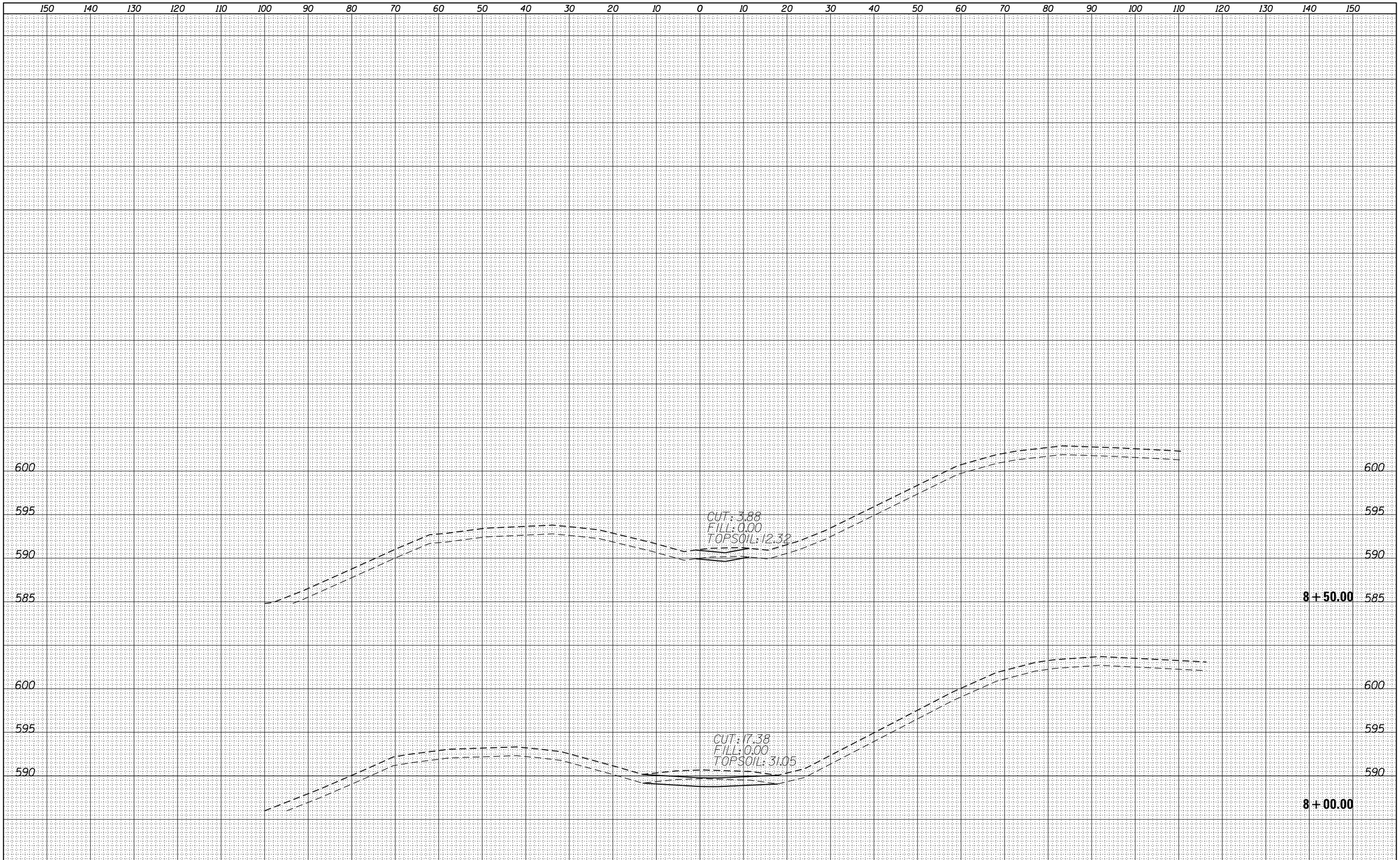

FINAL SURVEY		BY	DATE
NOTE BOOK	SURVEYED		
	PLOTTED		
	TEMPLATE		
	AREAS		
NO.	AREAS CHECKED		

ORIGINAL SURVEY		BY	DATE
NOTE BOOK	SURVEYED		
	PLOTTED		
	TEMPLATE		
	AREAS		
NO.	AREAS CHECKED		

FILE NAME = $FILEL$	USER NAME = default	DESIGNED - PTG	REVISED -
		DRAWN - PTG	REVISED -
	PLOT SCALE = $SCALE$	CHECKED -	REVISED -
	PLOT DATE = 12/7/2012	DATE -	REVISED -

STATE OF ILLINOIS
DEPARTMENT OF TRANSPORTATION

DETENTION BASIN H2
CROSS SECTION SHEET

SCALE: | SHEET 9 OF 12 SHEETS | STA. 8+00.00 TO STA. 8+50.00

F.A.I. RTE.	SECTION	COUNTY	TOTAL SHEETS	SHEET NO.
94	2012-060-BR	COOK	285	271

CONTRACT NO. 60V61

ILLINOIS FED. AID PROJECT

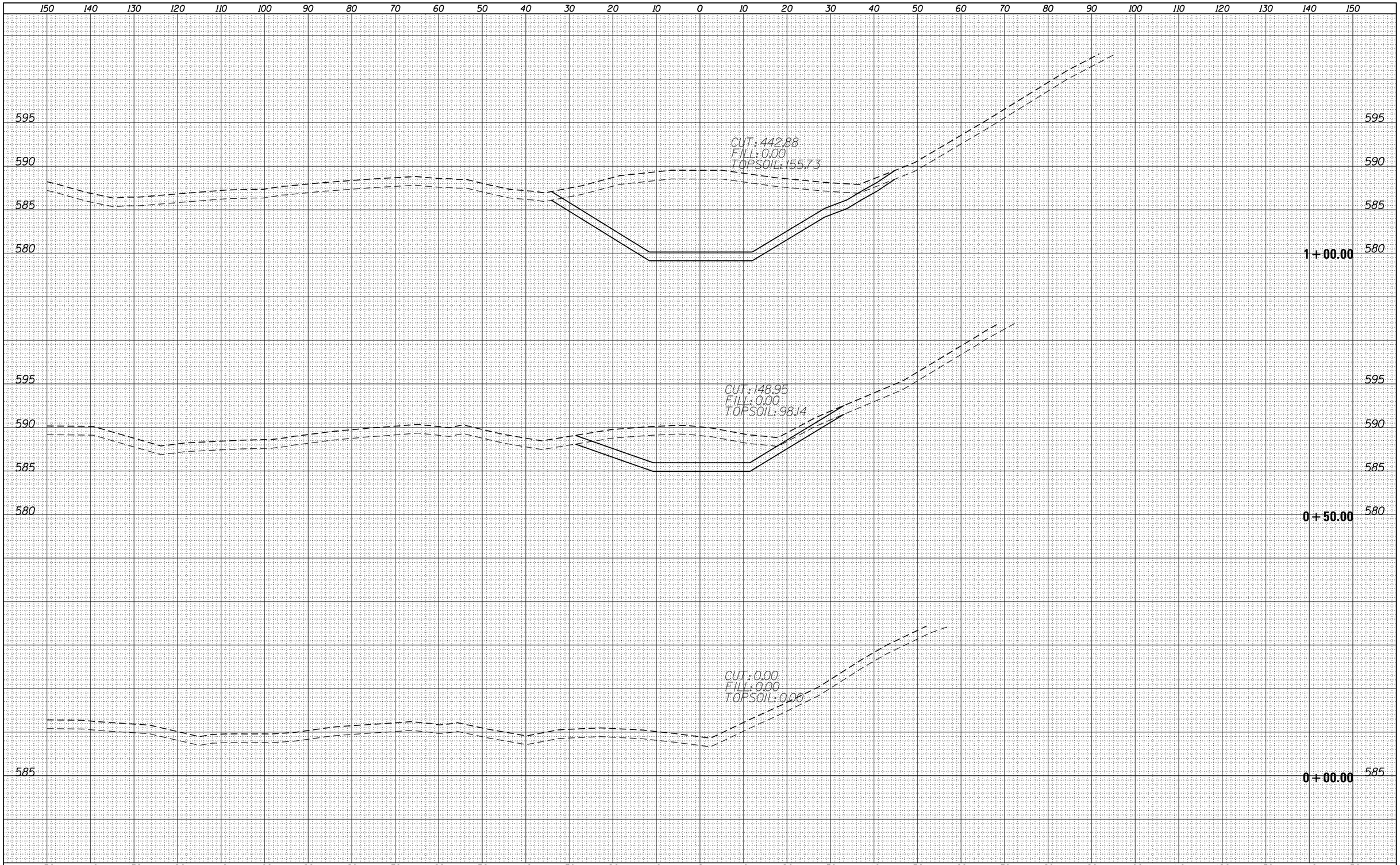

FINAL SURVEY		BY	DATE
NOTE BOOK	SURVEYED		
	PLOTTED		
	TEMPLATE		
	AREAS		
NO.	AREAS CHECKED		

ORIGINAL SURVEY		BY	DATE
NOTE BOOK	SURVEYED		
	PLOTTED		
	TEMPLATE		
	AREAS		
NO.	AREAS CHECKED		

FILE NAME = $FILEL$	USER NAME = default	DESIGNED - PTG	REVISED -
		DRAWN - PTG	REVISED -
	PLOT SCALE = $SCALE$	CHECKED -	REVISED -
	PLOT DATE = 12/7/2012	DATE -	REVISED -

STATE OF ILLINOIS
DEPARTMENT OF TRANSPORTATION

DETENTION BASIN B
CROSS SECTION SHEET

SCALE: | SHEET 10 OF 12 SHEETS | STA. 1+00.00 TO STA. 2+00.00

F.A.I. RTE.	SECTION	COUNTY	TOTAL SHEETS	SHEET NO.
94	2012-060-BR	COOK	285	272

CONTRACT NO. 60V61

ILLINOIS FED. AID PROJECT

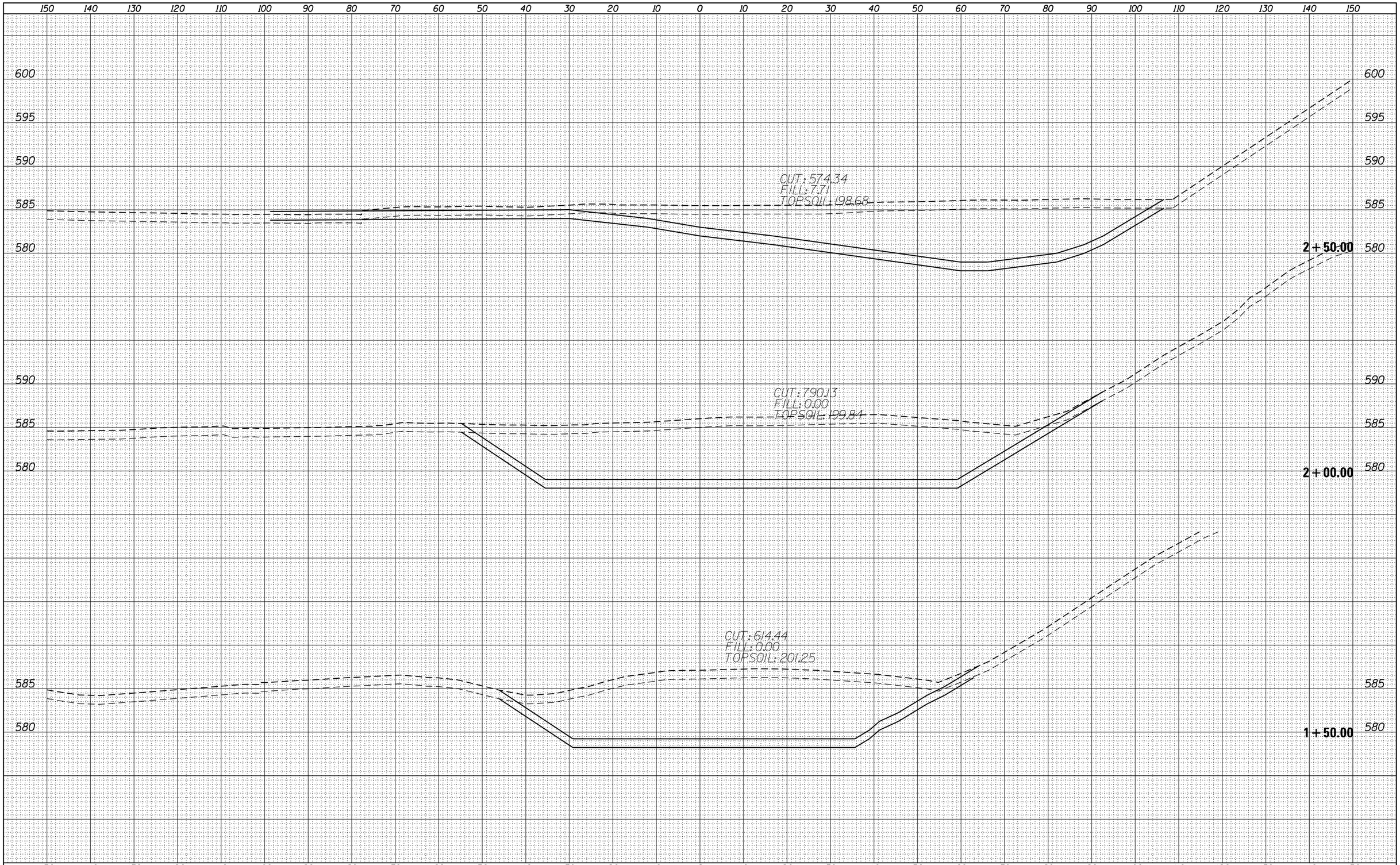

FINAL SURVEY		BY	DATE
NOTE BOOK	SURVEYED		
	PLOTTED		
	TEMPLATE		
	AREAS		
NO.	AREAS CHECKED		

ORIGINAL SURVEY		BY	DATE
NOTE BOOK	SURVEYED		
	PLOTTED		
	TEMPLATE		
	AREAS		
NO.	AREAS CHECKED		

FILE NAME = $FILEL$	USER NAME = default	DESIGNED - PTG	REVISED -
		DRAWN - PTG	REVISED -
	PLOT SCALE = $SCALE$	CHECKED -	REVISED -
	PLOT DATE = 12/7/2012	DATE -	REVISED -

STATE OF ILLINOIS
DEPARTMENT OF TRANSPORTATION

DETENTION BASIN B
CROSS SECTION SHEET

SCALE: | SHEET 11 OF 12 SHEETS | STA. 2+50.00 TO STA. 3+00.00

F.A.I. RTE.	SECTION	COUNTY	TOTAL SHEETS	SHEET NO.
94	2012-060-BR	COOK	285	273

CONTRACT NO. 60V61

ILLINOIS FED. AID PROJECT

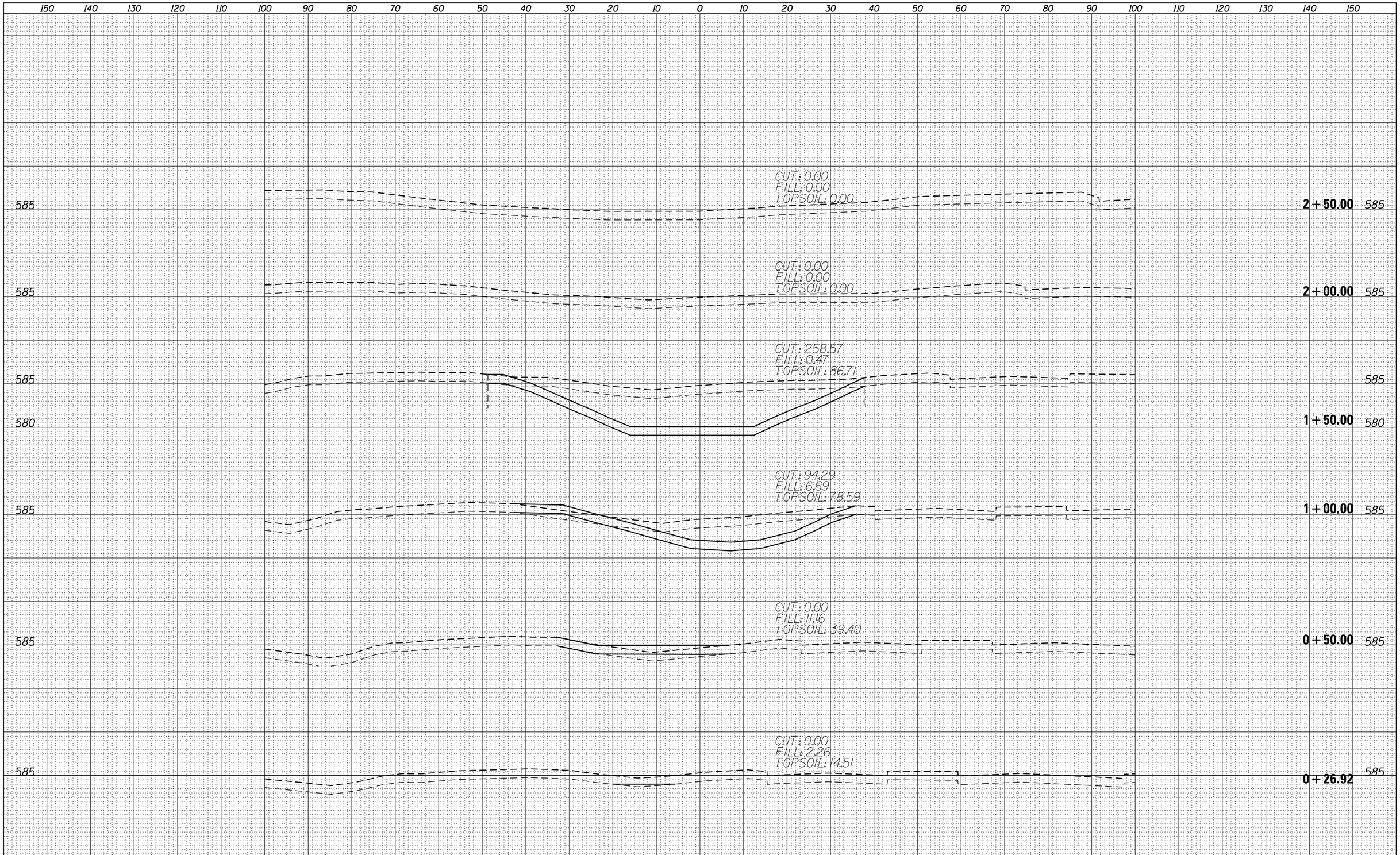

FINAL SURVEY		BY	DATE
NOTE BOOK	SURVEYED		
	PLOTTED		
	TEMPLATE		
	AREAS		
NO.	AREAS CHECKED		

ORIGINAL SURVEY		BY	DATE
NOTE BOOK	SURVEYED		
	PLOTTED		
	TEMPLATE		
	AREAS		
NO.	AREAS CHECKED		

FILE NAME = $FILEL$	USER NAME = default	DESIGNED - PTG	REVISED -
		DRAWN - PTG	REVISED -
	PLOT SCALE = $SCALE$	CHECKED -	REVISED -
	PLOT DATE = 12/7/2012	DATE -	REVISED -

STATE OF ILLINOIS
DEPARTMENT OF TRANSPORTATION

DETENTION BASIN H
CROSS SECTION SHEET

SCALE: | SHEET 12 OF 12 SHEETS | STA. +26.92 TO STA. 2+50.00

F.A.I. RTE.	SECTION	COUNTY	TOTAL SHEETS	SHEET NO.
94	2012-060-BR	COOK	285	274

CONTRACT NO. 60V61

ILLINOIS FED. AID PROJECT

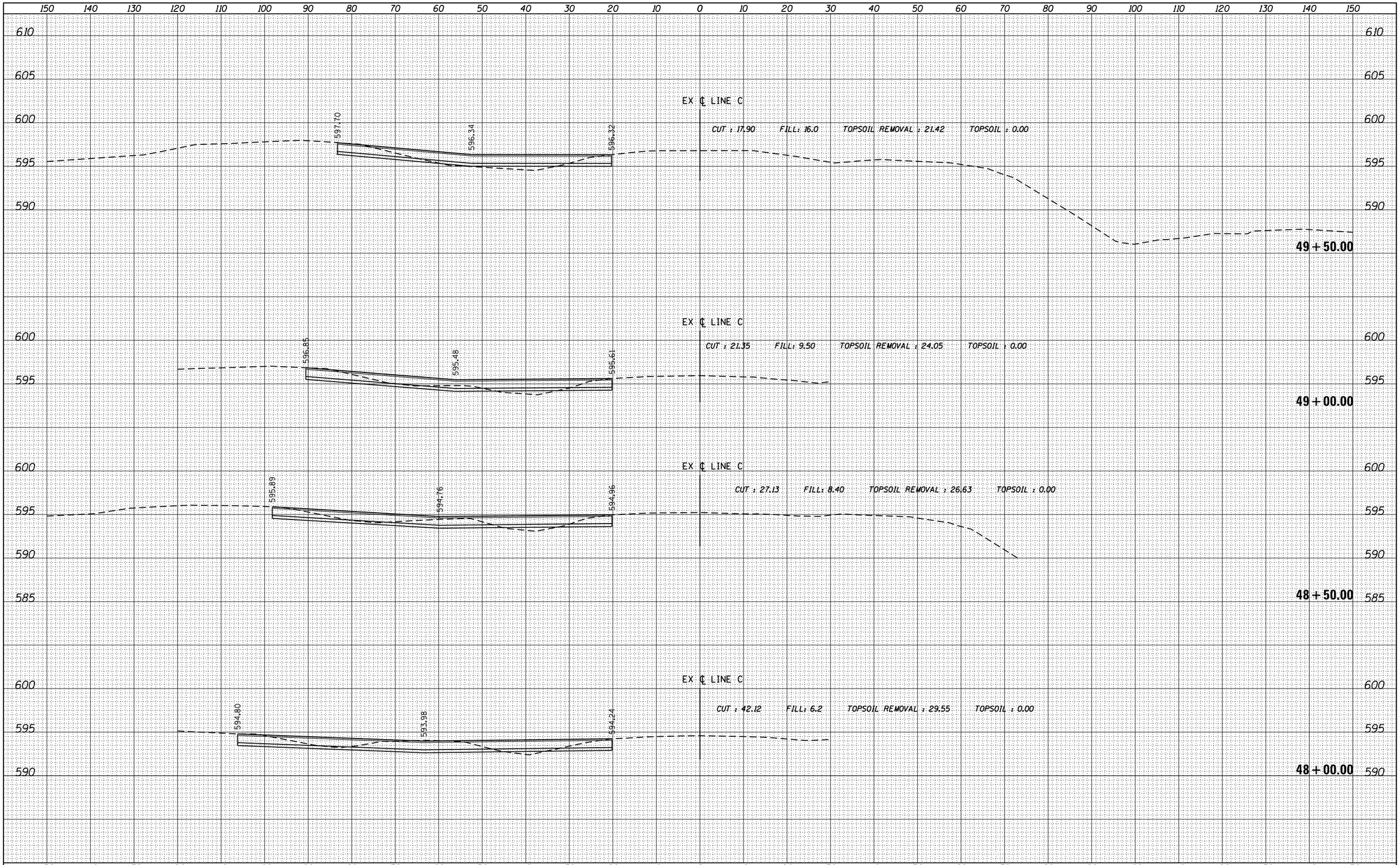

FINAL SURVEY	BY	DATE
SURVEYED		
PLOTTED		
TEMPLATE		
AREAS		
AREAS CHECKED		
NOTE BOOK NO.		

ORIGINAL SURVEY	BY	DATE
SURVEYED		
PLOTTED		
TEMPLATE		
AREAS		
AREAS CHECKED		
NOTE BOOK NO.		

FILE NAME = $FILEL$	USER NAME = default	DESIGNED -	REVISED -
		DRAWN - RA	REVISED -
	PLOT SCALE = $SCALE$	CHECKED - RGR	REVISED -
	PLOT DATE = 12/7/2012	DATE - 11/08/2012	REVISED -

STATE OF ILLINOIS
DEPARTMENT OF TRANSPORTATION

CROSS OVER CROSS SECTIONS

SCALE: HOR:1"=10' VER:1"=5' | SHEET 1 OF 11 SHEETS | STA. TO STA.

F.A.I. RTE.	SECTION	COUNTY	TOTAL SHEETS	SHEET NO.
94	2012-060-BR	COOK	285	275

CONTRACT NO. 60V61

ILLINOIS FED. AID PROJECT

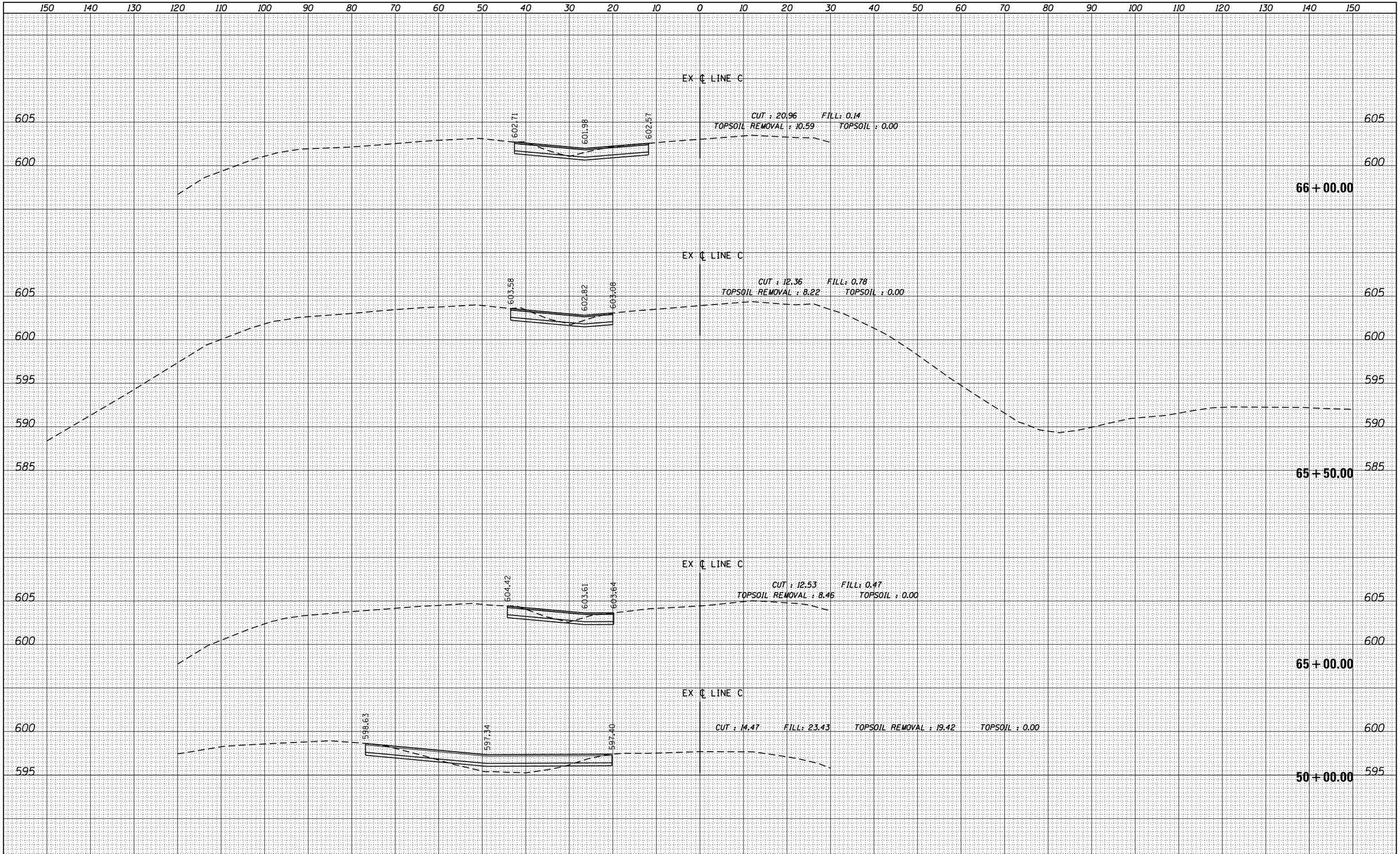

FINAL SURVEY	BY	DATE
SURVEYED		
PLOTTED		
TEMPLATE		
AREAS		
AREAS CHECKED		
NOTE BOOK NO.		

ORIGINAL SURVEY	BY	DATE
SURVEYED		
PLOTTED		
TEMPLATE		
AREAS		
AREAS CHECKED		
NOTE BOOK NO.		

FILE NAME = $FILEL$	USER NAME = default	DESIGNED -	REVISED -
		DRAWN - RA	REVISED -
	PLOT SCALE = $SCALE$	CHECKED - RGR	REVISED -
	PLOT DATE = 12/7/2012	DATE - 11/08/2012	REVISED -

STATE OF ILLINOIS
DEPARTMENT OF TRANSPORTATION

CROSS OVER CROSS SECTIONS

SCALE: HOR:1"=10' VER:1"=5' | SHEET 2 OF 11 SHEETS | STA. 50+00.00 TO STA.66+00.00

F.A.I. RTE.	SECTION	COUNTY	TOTAL SHEETS	SHEET NO.
94	2012-060-BR	COOK	285	276

CONTRACT NO. 60V61

ILLINOIS FED. AID PROJECT

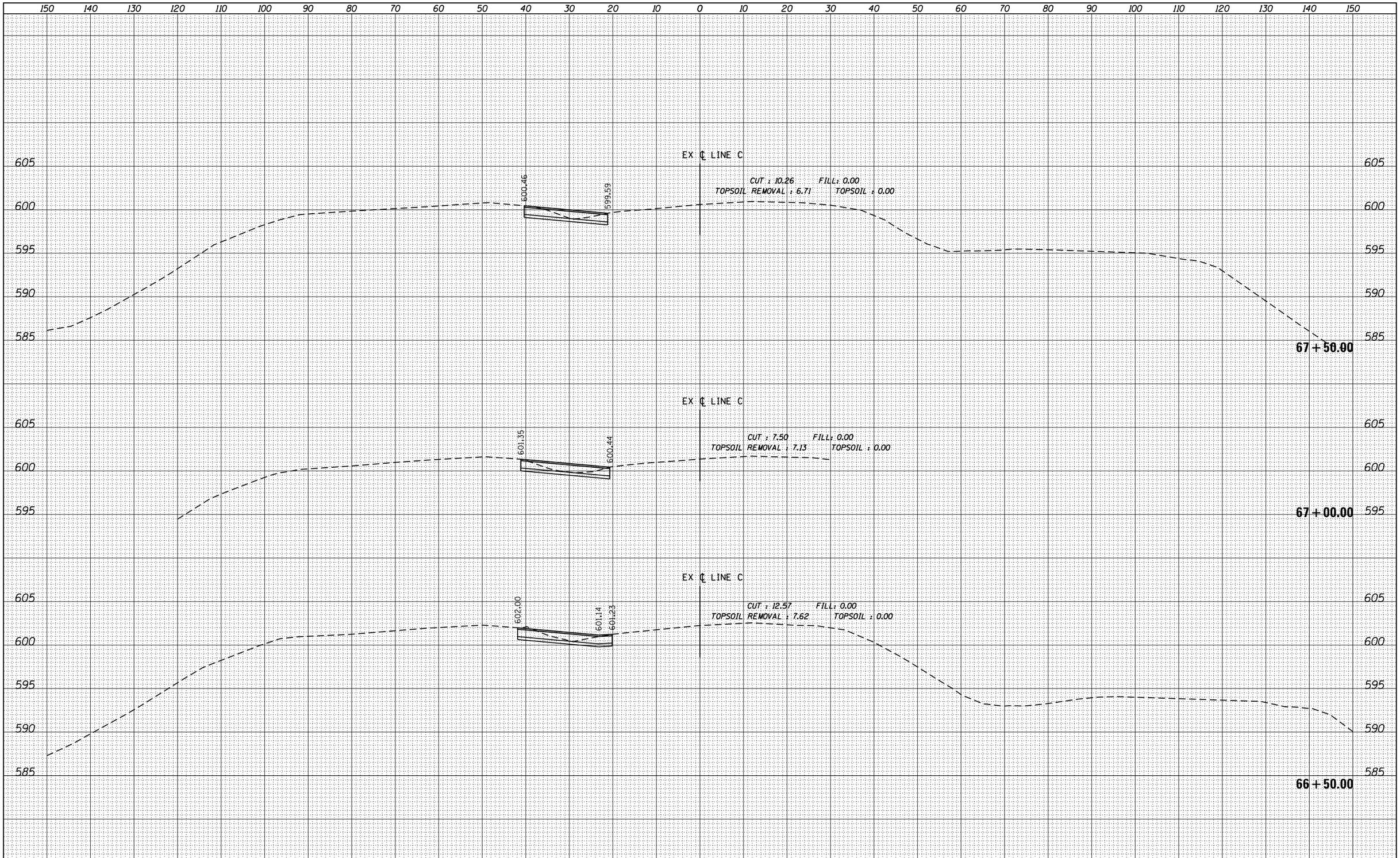

FINAL SURVEY		BY	DATE
NOTE BOOK	SURVEYED		
	PLOTTED		
	TEMPLATE		
	AREAS		
NO.	AREAS CHECKED		

ORIGINAL SURVEY		BY	DATE
NOTE BOOK	SURVEYED		
	PLOTTED		
	TEMPLATE		
	AREAS		
NO.	AREAS CHECKED		

FILE NAME = $FILEL$	USER NAME = default	DESIGNED -	REVISED -
		DRAWN - RA	REVISED -
	PLOT SCALE = $SCALE$	CHECKED - RGR	REVISED -
	PLOT DATE = 12/7/2012	DATE - 11/08/2012	REVISED -

STATE OF ILLINOIS
DEPARTMENT OF TRANSPORTATION

CROSS OVER CROSS SECTIONS

SCALE: HOR:1"=10' VER:1"=5' | SHEET 3 OF 11 SHEETS | STA. 66+50.00 TO STA.67+50.00

F.A.I. RTE.	SECTION	COUNTY	TOTAL SHEETS	SHEET NO.
94	2012-060-BR	COOK	285	277

CONTRACT NO. 60V61

ILLINOIS FED. AID PROJECT

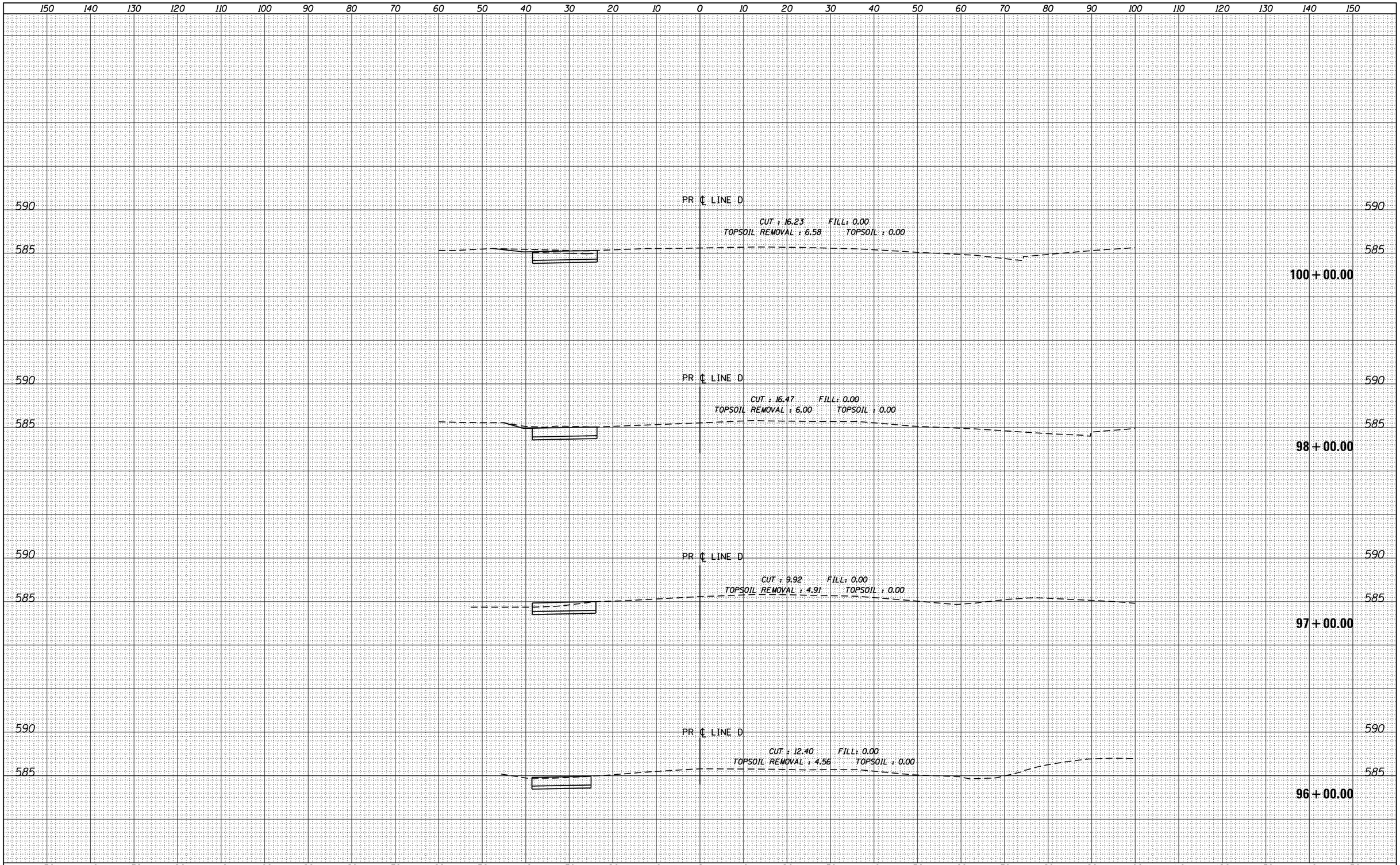

FINAL SURVEY		BY	DATE
NOTE BOOK	SURVEYED		
	PLOTTED		
	TEMPLATE		
	AREAS		
NO.	AREAS CHECKED		

ORIGINAL SURVEY		BY	DATE
NOTE BOOK	SURVEYED		
	PLOTTED		
	TEMPLATE		
	AREAS		
NO.	AREAS CHECKED		

FILE NAME = $FILEL$	USER NAME = default	DESIGNED -	REVISED -
		DRAWN - RA	REVISED -
	PLOT SCALE = $SCALE$	CHECKED - RGR	REVISED -
	PLOT DATE = 12/7/2012	DATE - 11/08/2012	REVISED -

STATE OF ILLINOIS
DEPARTMENT OF TRANSPORTATION

LINE D WIDENING CROSS SECTIONS

SCALE: HOR:1"=10' VER:1"=5' | SHEET 4 OF 11 SHEETS | STA. 96+00.00 TO STA.100+00.00

F.A.I. RTE.	SECTION	COUNTY	TOTAL SHEETS	SHEET NO.
94	2012-060-BR	COOK	285	278

CONTRACT NO. 60V61

ILLINOIS FED. AID PROJECT

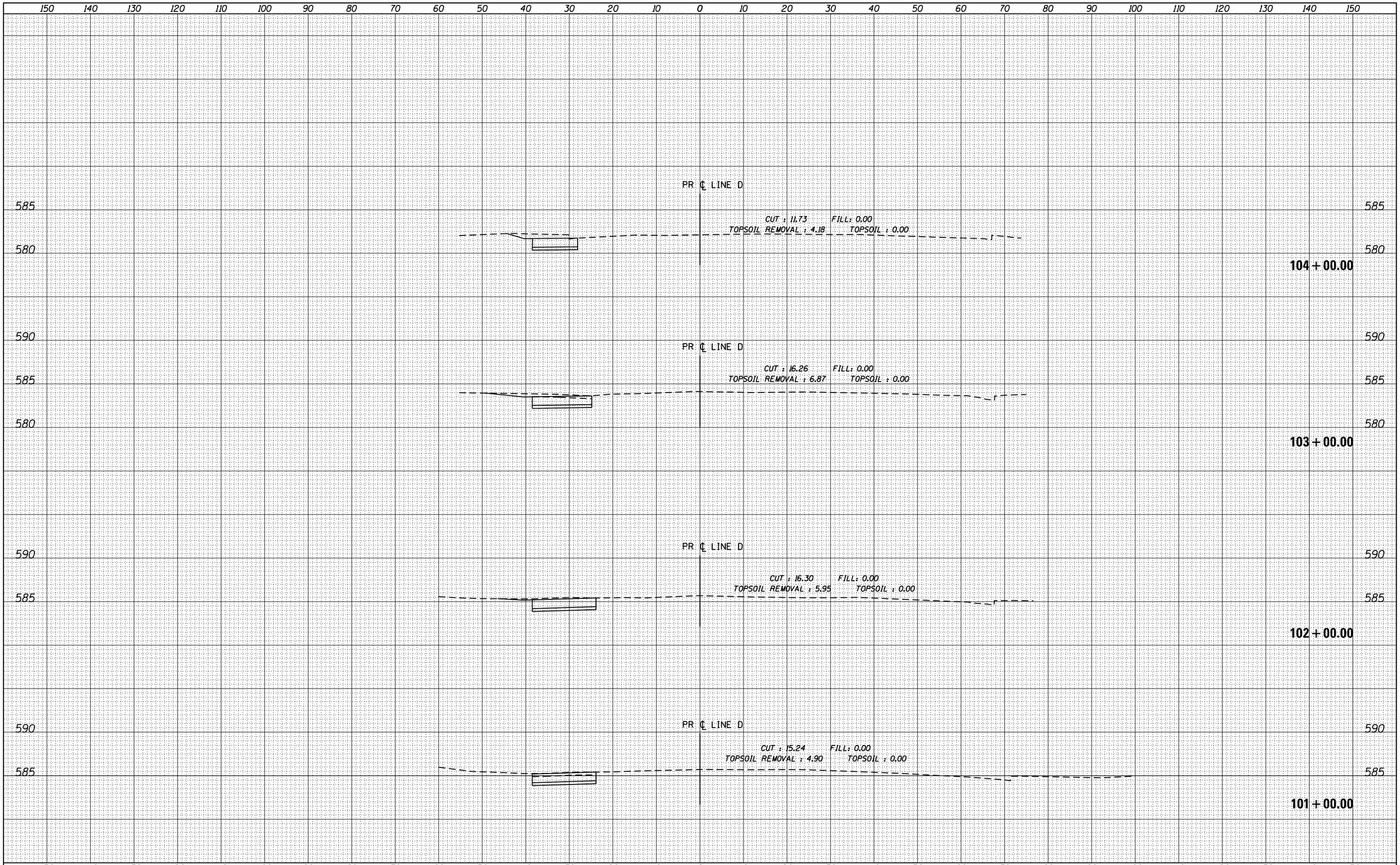

FINAL SURVEY		BY	DATE
NOTE BOOK	SURVEYED		
	PLOTTED		
	TEMPLATE		
	AREAS		
NO.	AREAS CHECKED		

ORIGINAL SURVEY		BY	DATE
NOTE BOOK	SURVEYED		
	PLOTTED		
	TEMPLATE		
	AREAS		
NO.	AREAS CHECKED		

FILE NAME = $FILEL$	USER NAME = default	DESIGNED -	REVISED -
		DRAWN - RA	REVISED -
	PLOT SCALE = $SCALE$	CHECKED - RGR	REVISED -
	PLOT DATE = 12/7/2012	DATE - 11/08/2012	REVISED -

STATE OF ILLINOIS
DEPARTMENT OF TRANSPORTATION

LINE D WIDENING CROSS SECTIONS

SCALE: HOR:1"=10' VER:1"=5' | SHEET 5 OF 11 SHEETS | STA. 101+00.00 TO STA.104+00.00

F.A.I. RTE.	SECTION	COUNTY	TOTAL SHEETS	SHEET NO.
94	2012-060-BR	COOK	285	279

CONTRACT NO. 60V61

ILLINOIS FED. AID PROJECT

FINAL SURVEY		BY	DATE
NOTE BOOK	SURVEYED		
	PLOTTED		
	TEMPLATE		
	AREAS		
NO.	AREAS CHECKED		

ORIGINAL SURVEY		BY	DATE
NOTE BOOK	SURVEYED		
	PLOTTED		
	TEMPLATE		
	AREAS		
NO.	AREAS CHECKED		

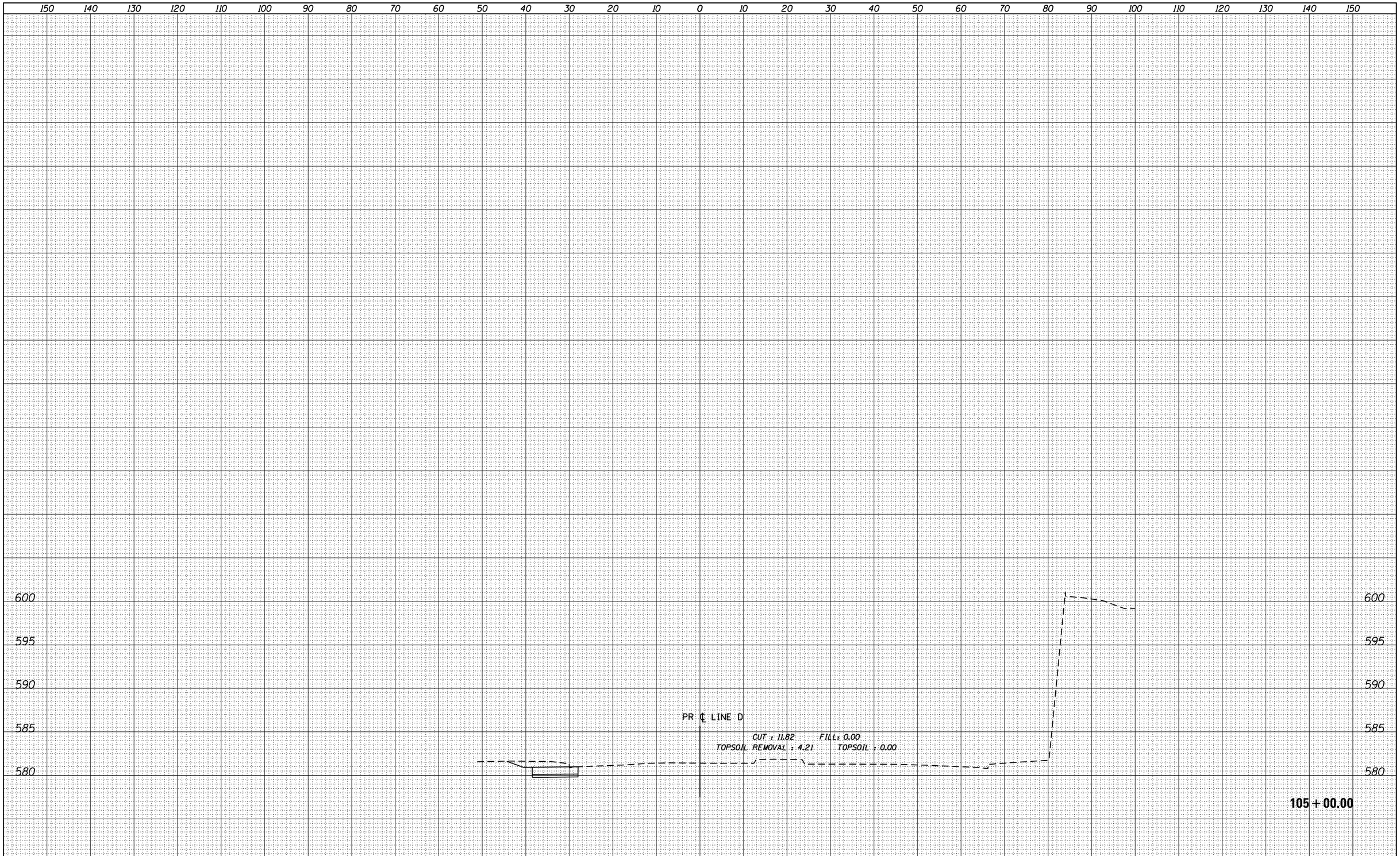

FILE NAME = $FILEL$	USER NAME = default	DESIGNED -	REVISED -
		DRAWN - RA	REVISED -
	PLOT SCALE = $SCALE$	CHECKED - RGR	REVISED -
	PLOT DATE = 12/7/2012	DATE - 11/08/2012	REVISED -

STATE OF ILLINOIS
DEPARTMENT OF TRANSPORTATION

LINE D WIDENING CROSS SECTIONS

SCALE: HOR:1"=10' VER:1"=5' | SHEET 6 OF 11 SHEETS | STA. 105+00.00 TO STA.105+00.00

F.A.I. RTE.	SECTION	COUNTY	TOTAL SHEETS	SHEET NO.
94	2012-060-BR	COOK	285	280

CONTRACT NO. 60V61

ILLINOIS FED. AID PROJECT

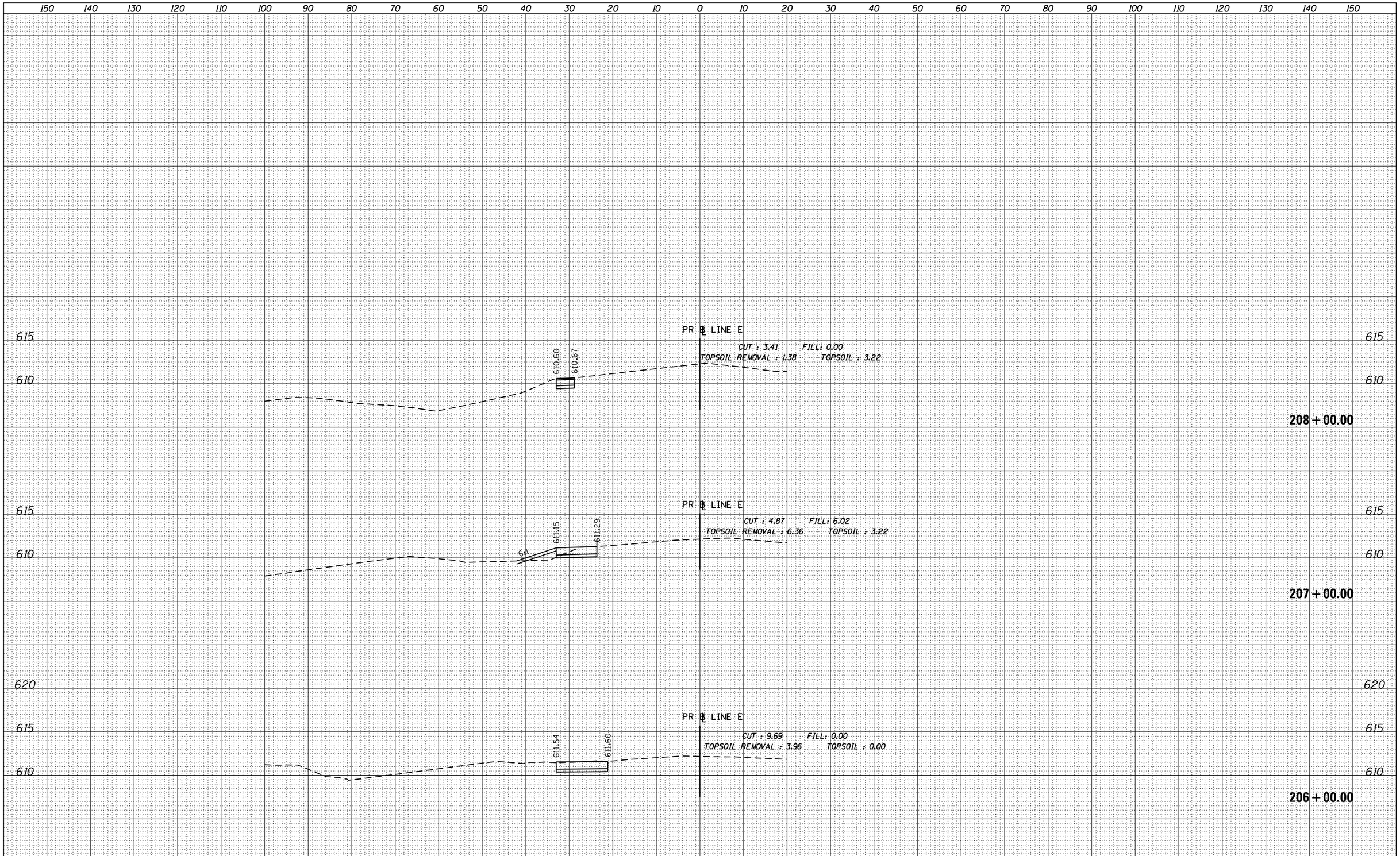

FINAL SURVEY		BY	DATE
NOTE BOOK	SURVEYED		
	PLOTTED		
	TEMPLATE		
	AREAS		
NO.	AREAS CHECKED		

ORIGINAL SURVEY		BY	DATE
NOTE BOOK	SURVEYED		
	PLOTTED		
	TEMPLATE		
	AREAS		
NO.	AREAS CHECKED		

FILE NAME = $FILEL$	USER NAME = default	DESIGNED -	REVISED -
		DRAWN - RA	REVISED -
	PLOT SCALE = $SCALE$	CHECKED - RGR	REVISED -
	PLOT DATE = 12/7/2012	DATE - 11/08/2012	REVISED -

STATE OF ILLINOIS
DEPARTMENT OF TRANSPORTATION

LINE E WIDENING CROSS SECTIONS

SCALE: HOR:1"=10' VER:1"=5' | SHEET 7 OF 11 SHEETS | STA. 206+00.00 TO STA.208+00.00

F.A.I. RTE.	SECTION	COUNTY	TOTAL SHEETS	SHEET NO.
94	2012-060-BR	COOK	285	281

CONTRACT NO. 60V61

ILLINOIS FED. AID PROJECT

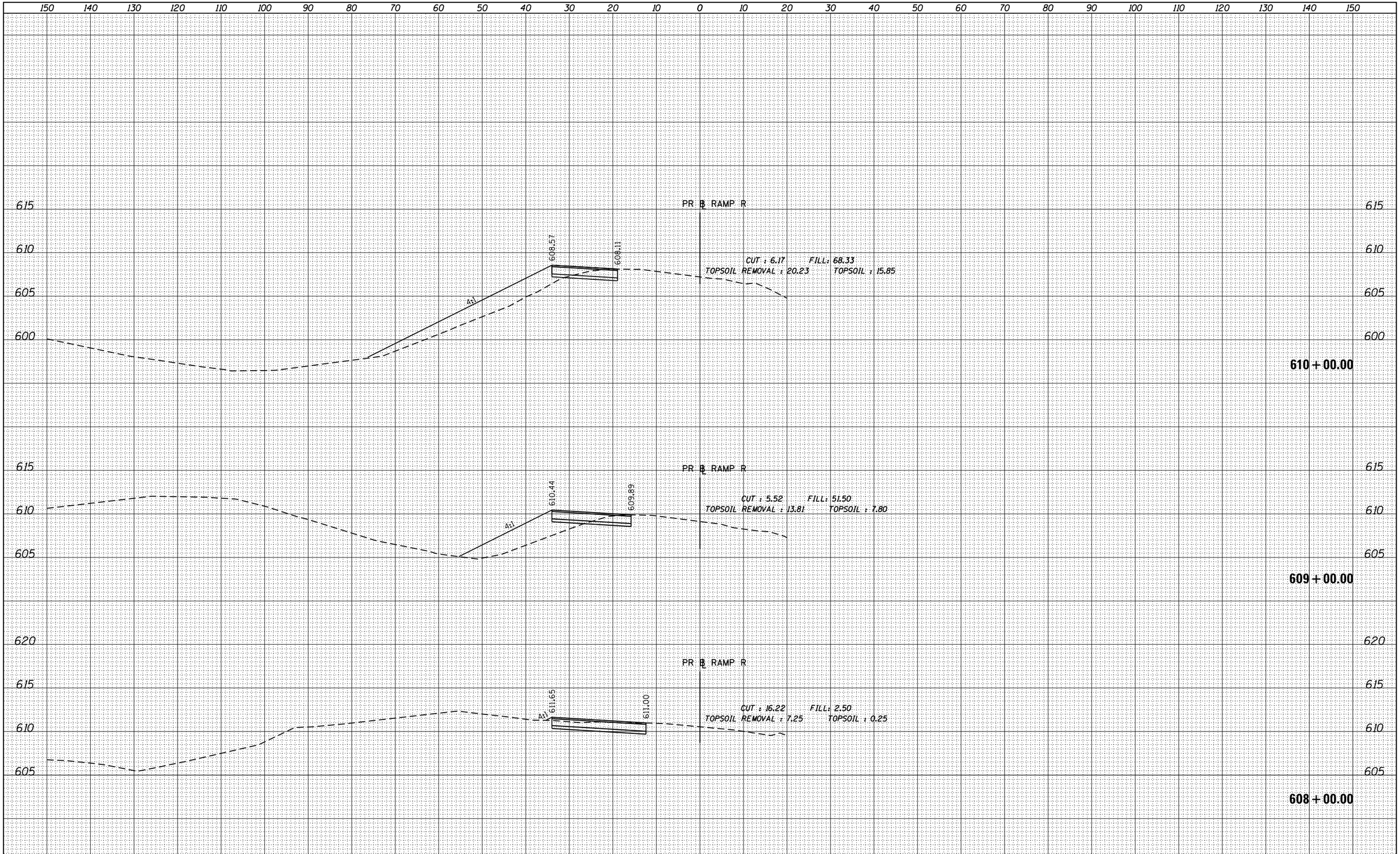

FINAL SURVEY	BY	DATE
SURVEYED		
PLOTTED		
TEMPLATE		
AREAS		
AREAS CHECKED		
NOTE BOOK NO.		

ORIGINAL SURVEY	BY	DATE
SURVEYED		
PLOTTED		
TEMPLATE		
AREAS		
AREAS CHECKED		
NOTE BOOK NO.		

FILE NAME = $FILEL$	USER NAME = default	DESIGNED -	REVISED -
		DRAWN - RA	REVISED -
	PLOT SCALE = $SCALE$	CHECKED - RGR	REVISED -
	PLOT DATE = 12/7/2012	DATE - 11/08/2012	REVISED -

STATE OF ILLINOIS
DEPARTMENT OF TRANSPORTATION

RAMP R WIDENING CROSS SECTIONS

SCALE: HOR:1"=10' VER:1"=5' | SHEET 8 OF 11 SHEETS | STA. 608+00.00 TO STA. 610+00.00

F.A.I. RTE.	SECTION	COUNTY	TOTAL SHEETS	SHEET NO.
94	2012-060-BR	COOK	285	282

CONTRACT NO. 60V61

ILLINOIS FED. AID PROJECT

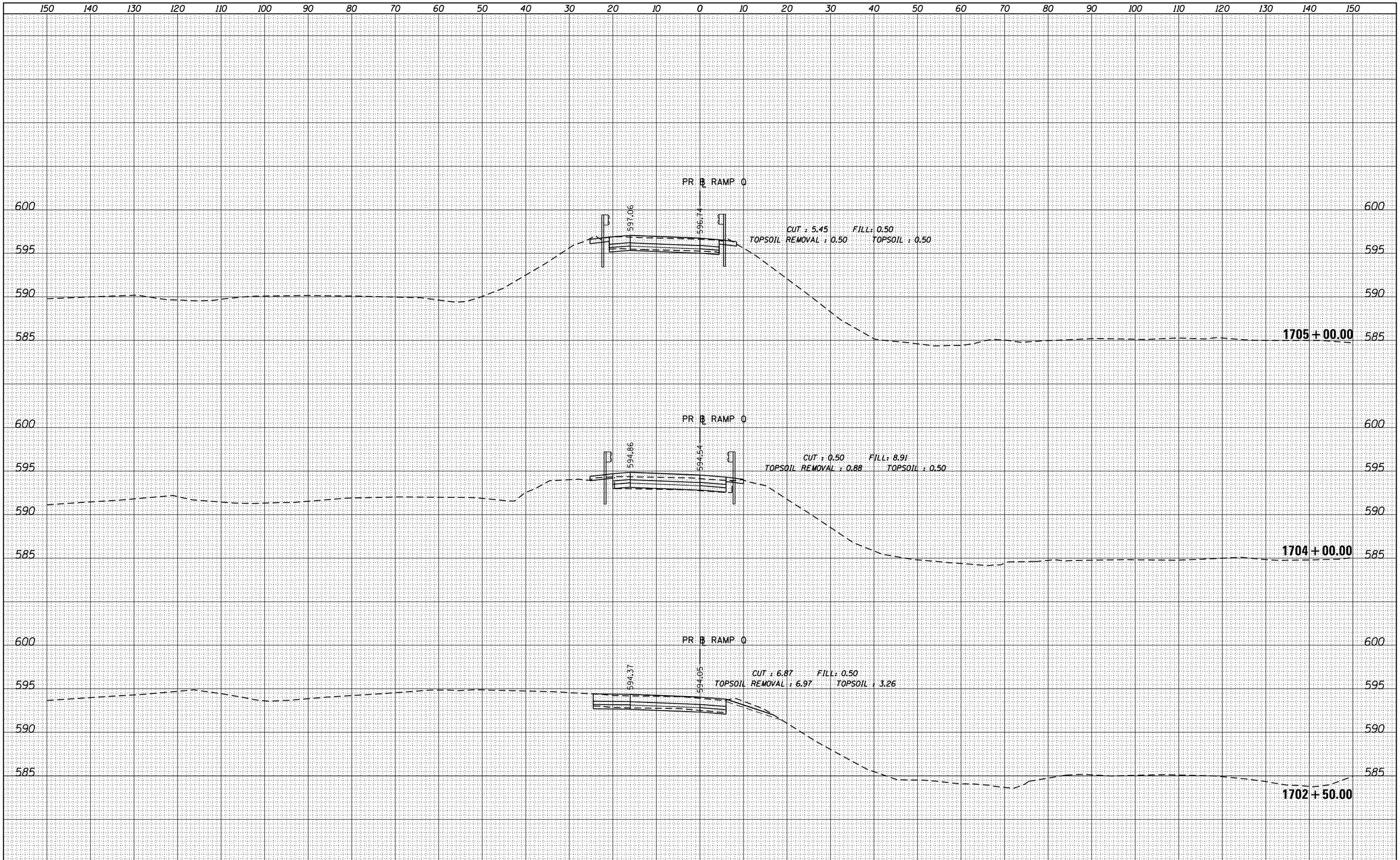

FINAL SURVEY		BY	DATE
NOTE BOOK NO.	SURVEYED		
	PLOTTED		
	TEMPLATE		
	AREAS		
	AREAS CHECKED		

ORIGINAL SURVEY		BY	DATE
NOTE BOOK NO.	SURVEYED		
	PLOTTED		
	TEMPLATE		
	AREAS		
	AREAS CHECKED		

FILE NAME = $FILEL$	USER NAME = default	DESIGNED -	REVISED -
		DRAWN - RA	REVISED -
	PLOT SCALE = $SCALE$	CHECKED - RGR	REVISED -
	PLOT DATE = 12/7/2012	DATE - 11/08/2012	REVISED -

STATE OF ILLINOIS
DEPARTMENT OF TRANSPORTATION

RAMP Q CROSS SECTIONS

SCALE: HOR:1"=10' VER:1"=5' | SHEET 9 OF 11 SHEETS | STA. 1702+50.00 TO STA.1705+00.00

F.A.I. RTE.	SECTION	COUNTY	TOTAL SHEETS	SHEET NO.
94	2012-060-BR	COOK	285	283

CONTRACT NO. 60V61

ILLINOIS FED. AID PROJECT

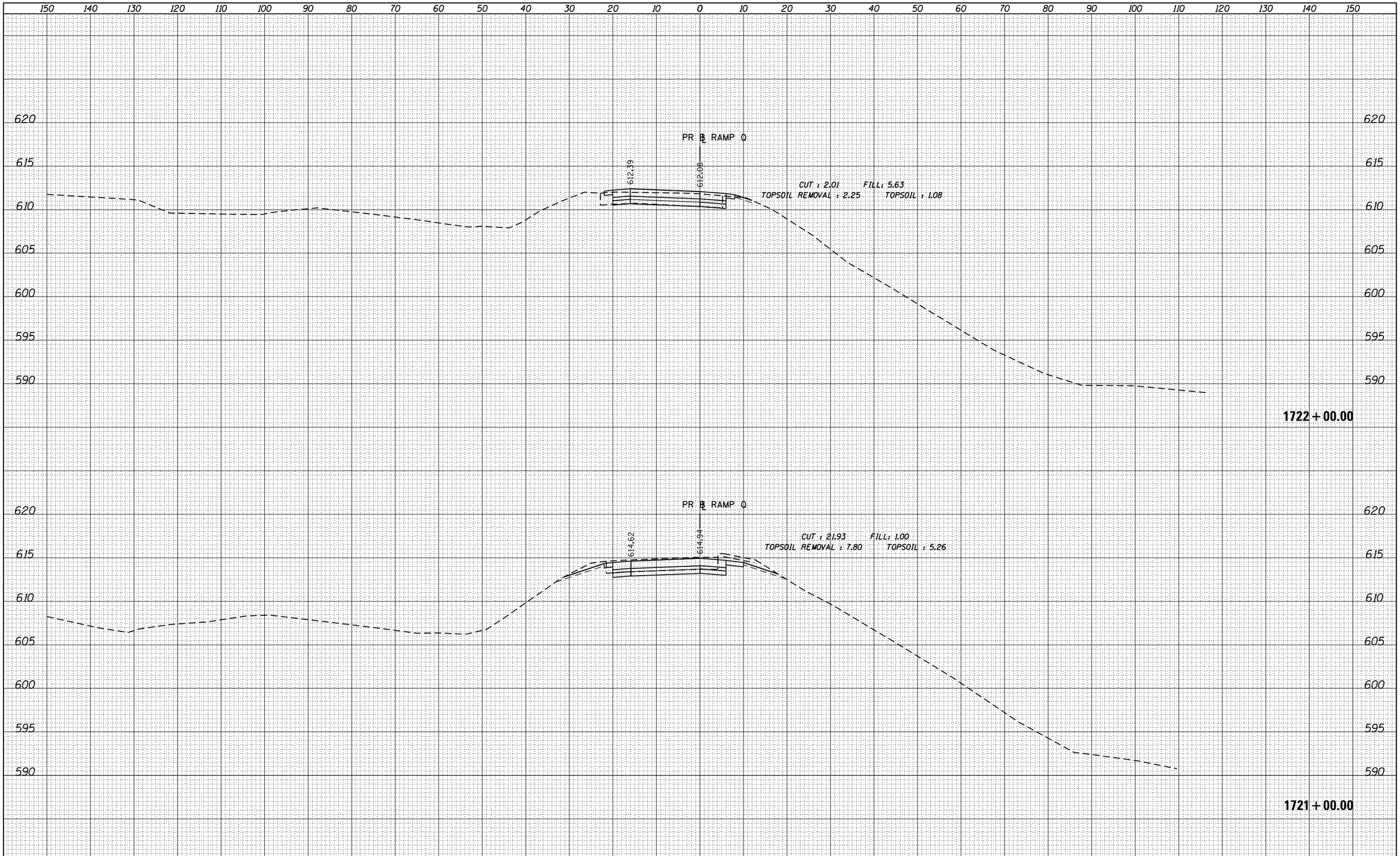

FINAL SURVEY	BY	DATE
SURVEYED		
PLOTTED		
TEMPLATE		
AREAS		
AREAS CHECKED		
NOTE BOOK NO.		

ORIGINAL SURVEY	BY	DATE
SURVEYED		
PLOTTED		
TEMPLATE		
AREAS		
AREAS CHECKED		
NOTE BOOK NO.		

FILE NAME = $FILEL$	USER NAME = default	DESIGNED -	REVISED -
		DRAWN - RA	REVISED -
	PLOT SCALE = $SCALE$	CHECKED - RGR	REVISED -
	PLOT DATE = 12/7/2012	DATE - 11/08/2012	REVISED -

STATE OF ILLINOIS
DEPARTMENT OF TRANSPORTATION

RAMP Q CROSS SECTIONS

SCALE: HOR:1"=10' VER:1"=5' | SHEET 10 OF 11 SHEETS | STA. 1721+00.00 TO STA.1722+00.00

F.A.I. RTE.	SECTION	COUNTY	TOTAL SHEETS	SHEET NO.
94	2012-060-BR	COOK	285	284

CONTRACT NO. 60V61

ILLINOIS FED. AID PROJECT

FINAL SURVEY		BY	DATE
	SURVEYED		
	PLOTTED		
NOTE BOOK	TEMPLATE		
	AREAS		
NO.	AREAS CHECKED		

ORIGINAL SURVEY		BY	DATE
	SURVEYED		
	PLOTTED		
NOTE BOOK	TEMPLATE		
	AREAS		
NO.	AREAS CHECKED		

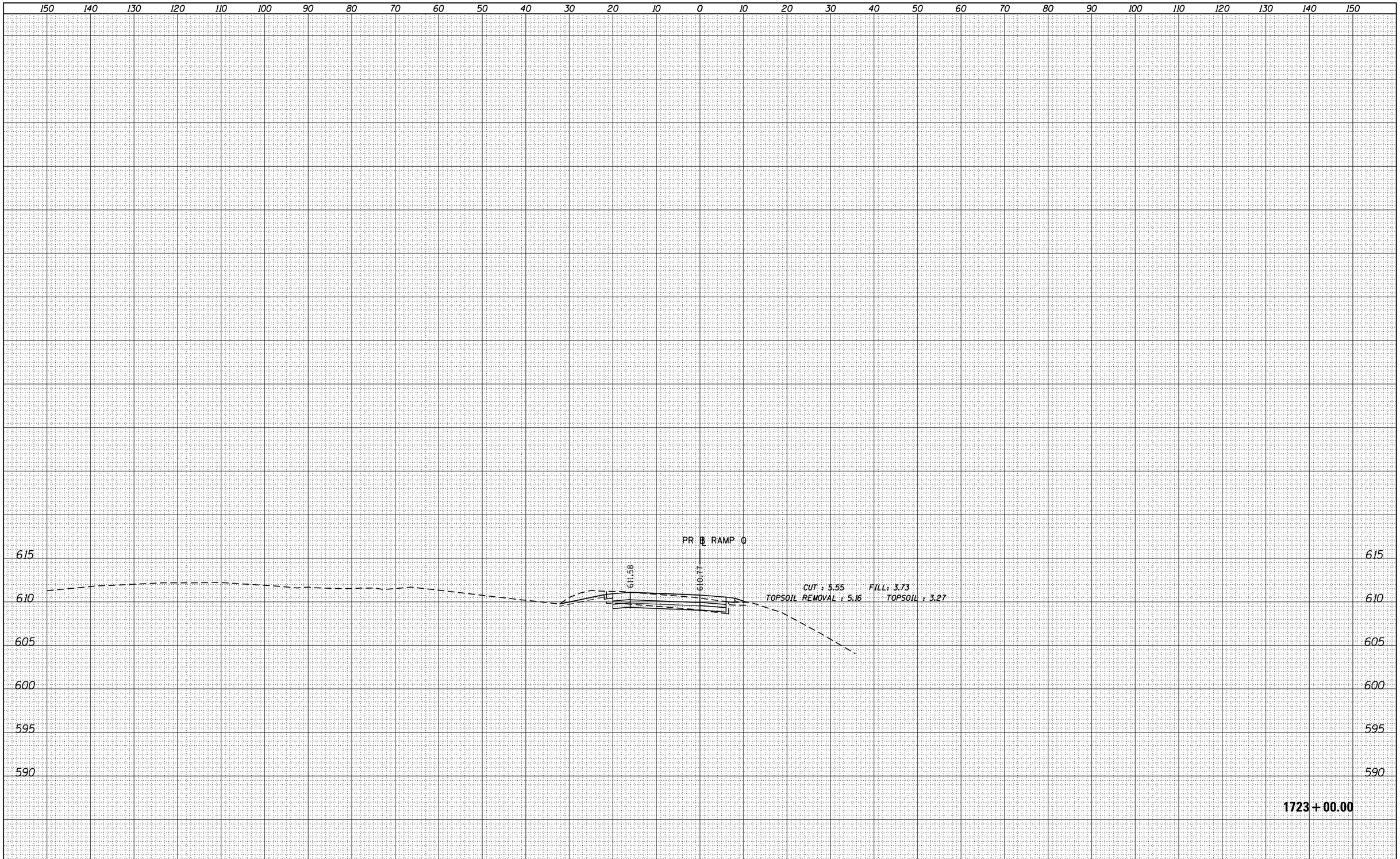

FILE NAME = $FILEL$	USER NAME = default	DESIGNED -	REVISED -
		DRAWN - RA	REVISED -
	PLOT SCALE = $SCALE$	CHECKED - RGR	REVISED -
	PLOT DATE = 12/7/2012	DATE - 11/08/2012	REVISED -

STATE OF ILLINOIS
DEPARTMENT OF TRANSPORTATION

RAMP Q CROSS SECTIONS

SCALE: HOR:1"=10' VER:1"=5' | SHEET 11 OF 11 SHEETS | STA. 1723+00.00 TO STA.1723+00.00

F.A.I. RTE.	SECTION	COUNTY	TOTAL SHEETS	SHEET NO.
94	2012-060-BR	COOK	285	285

CONTRACT NO. 60V61

ILLINOIS FED. AID PROJECT