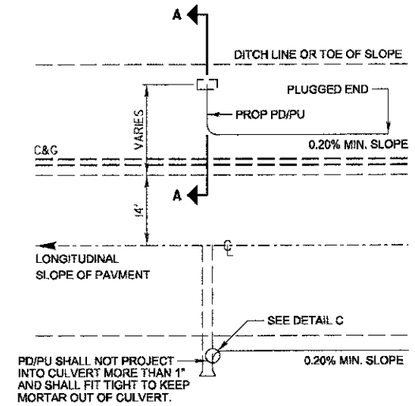


TYPICAL PIPE DRAIN/ PIPE UNDERDRAIN OUTLET

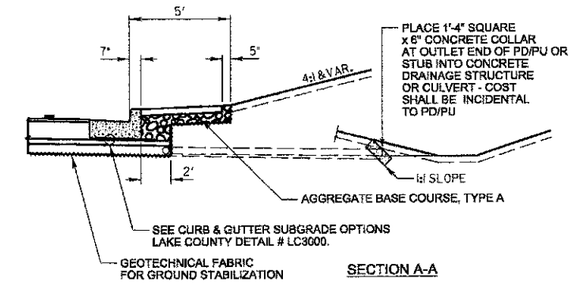


SECTION A-A

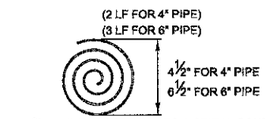


3/16" WIRE STOCK BENT TO A SPIRAL CONFIGURATION. TO INSTALL, TWIST INTO PD/PU END. (FOR CORRUGATED CIRCULAR METAL PIPE)

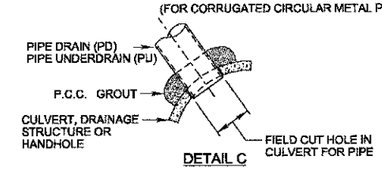


DETAIL C

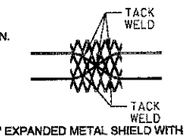


6"x6" EXPANDED METAL SHIELD WITH TWO 2'-6" LONG PREFABRICATED 6 GAGE STEEL STRUTS FOR SNUG FIT INTO THE PD/PU END.

RODENT SHIELDS DETAIL
(ALTERNATES)

NOT TO SCALE

DESIGN NOTES:

All work shall be according to the applicable portions of the "Standard Specifications" except as modified hereon.

In addition to the requirements of Article 601.08 of the "Standard Specifications", the contract unit price per foot for pipe drains 4" & 6" and pipe underdrains 4" shall include the cost of furnishing and placing the rodent shield.

The removable rodent shield shall be furnished and installed in accordance with one of the configurations shown. The shield shall be fabricated from steel wire, or expanded metal, as detailed above and shall be galvanized after fabrication in accordance with AASHTO M-111. Other submitted designs for a removable rodent shield will be allowed with the approval of the Engineer.

| REVISIONS | DATE |
|---|---|
| Pipe Drain Added to Labels | 5/19/2009 |

LakeCounty Division of Transportation

APPROVED BY: M. G. ZEMAITIS
DATE: APRIL 1, 2007

SUB-SURFACE DRAINS

LC6020

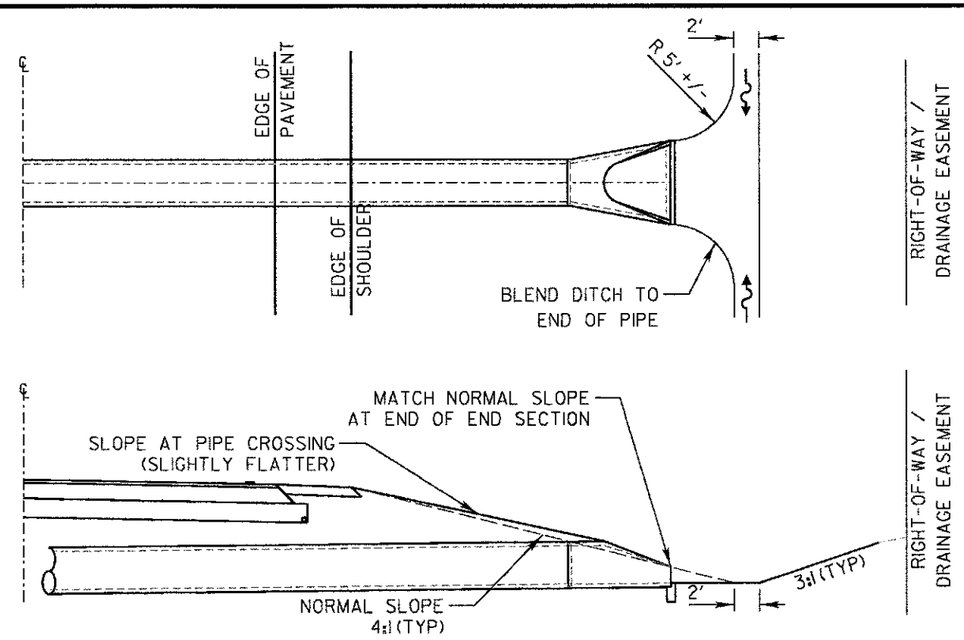


| REVISIONS | DATE |
|---|---|

LakeCounty Division of Transportation

APPROVED BY: M. G. ZEMAITIS
DATE: JANUARY 19, 2009

TYPICAL PLACEMENT OF PRECAST END SECTIONS ON CROSSROAD CULVERTS

LC5401

ELEVATION, 3-RAIL, 8' NOM. LENGTH

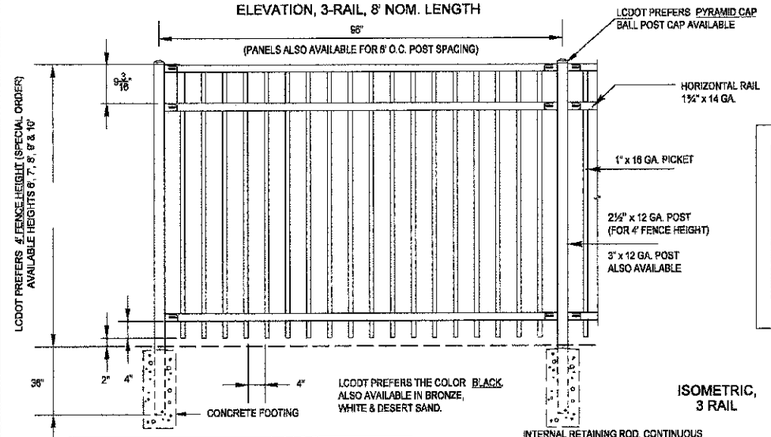


CROSS SECTION OF HORIZONTAL RAIL

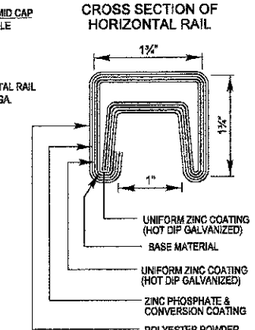


ISOMETRIC, 3 RAIL

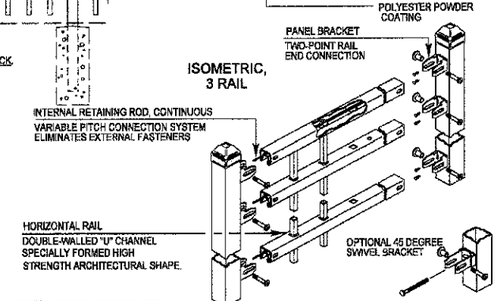


Post Selection for Fence Height 6' - 10'

| Wind Loading | | | | |
|---|---|---|---|---|
| Fence Height (FT) | Rail Length (FT) | Post Size | Wind Load Capacity Factor (PSF) | Typical Wind Load Capacity (mph) |
| 6 | 8 | 2 ½" x 12 GA. | 45.5 | 133.0 |
| | | 3" x 12 GA. | 54.8 | 146.0 |
| | 8 | 2 ½" x 12 GA. | 34.2 | 118.0 |
| | | 3" x 12 GA. | 43.0 | 127.0 |
| 7 | 6 | 2 ½" x 12 GA. | 38.4 | 114.0 |
| | | 3" x 12 GA. | 46.0 | 125.0 |
| | 8 | 2 ½" x 12 GA. | 25.0 | 99.0 |
| | | 3" x 12 GA. | 30.0 | 108.0 |
| 8 | 6 | 2 ½" x 12 GA. | 25.6 | 100.0 |
| | | 3" x 12 GA. | 30.7 | 110.0 |
| | 8 | 2 ½" x 12 GA. | 19.2 | 87.0 |
| | | 3" x 12 GA. | 23.0 | 95.0 |
| | | 4" x 12 GA. | 30.8 | 110.0 |
| 9 | 8 | 4" x 12 GA. | 32.0 | 113.0 |
| 10 | 8 | 4" x 12 GA. | 28.7 | 107.0 |

GATES: SPECIFY OPENING WIDTHS
SINGLE _____ QUANTITY_____
DOUBLE _____ QUANTITY_____

| REVISIONS | DATE |
|---|---|
| Text Update | 7/15/11 |

LakeCounty Division of Transportation

APPROVED BY: M. G. ZEMAITIS
DATE: APRIL 1, 2007

ORNAMENTAL FENCE THREE RAIL (ONE MFGR'S DETAILS)

LC6801

CIVILTECH
450 E Devon Ave, Suite 300
Itasca, Illinois 60143
Tel: 630.773.3900 Fax: 630.773.3975
www.civiltechinc.com

| DESIGNED - PK | REVISED - |
|---|---|
| DRAWN - JRR | REVISED - |
| CHECKED - RTM | REVISED - |
| DATE - 12/17/2012 | REVISED - |

STATE OF ILLINOIS
DEPARTMENT OF TRANSPORTATION

HIGHWAY STANDARDS

SHEET NO. 4 OF 10 SHEETS

| F.A.U. RTE. | SECTION | COUNTY | TOTAL SHEETS | SHEET NO. |
|---|---|---|---|---|
| 0187 | 05-00121-07-WR | LAKE | 223 | 161 |

CONTRACT NO. 63765

FED. ROAD DIST. NO. 1 ILLINOIS FED. AID PROJECT