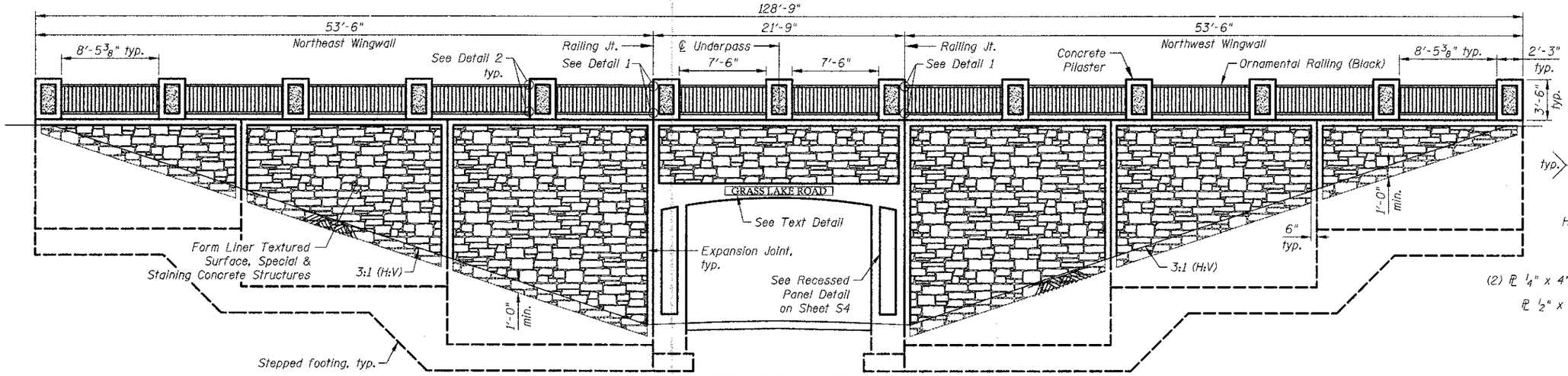

NORTH END SECTION

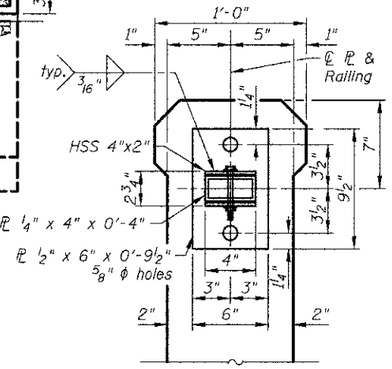

SECTION M-M

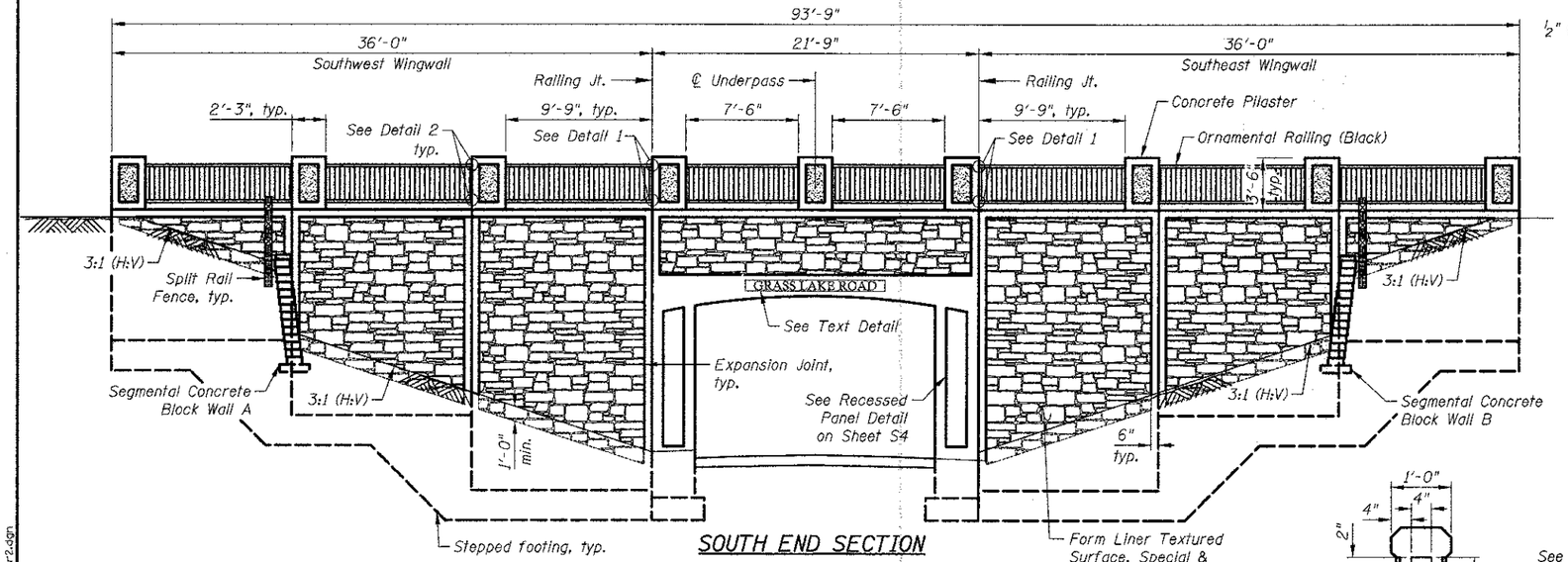

SOUTH END SECTION

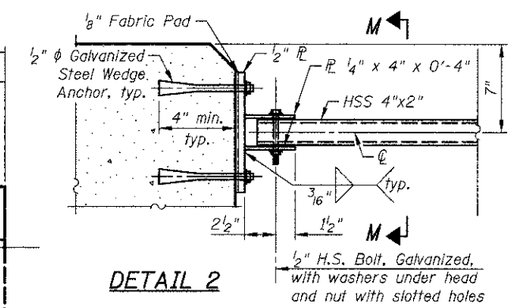

DETAIL 2

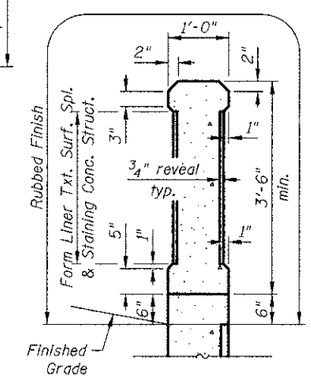

SECTION K-K

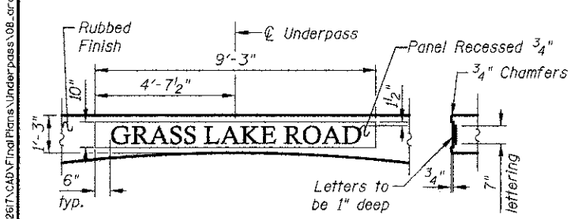

TEXT DETAIL

Font Style to be Calisto MT

Letters are to be cast-in-place with a one piece form liner securely attached to the forms and according to Article 503.06(a). Individual letters are not permitted.

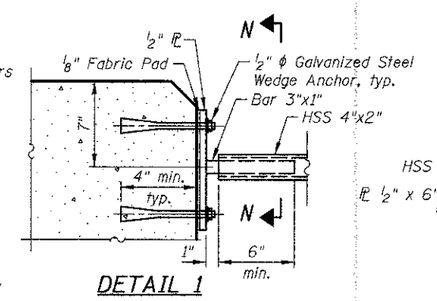

DETAIL 1

Railing Expansion Joint Detail

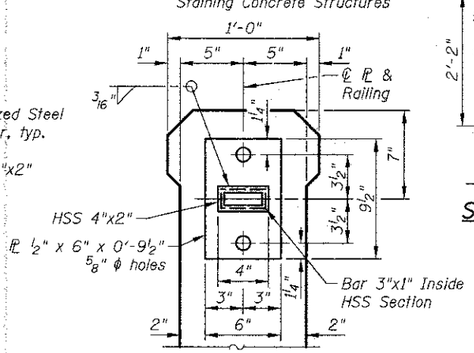

SECTION N-N

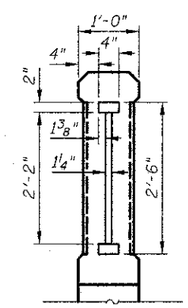

SECTION L-L

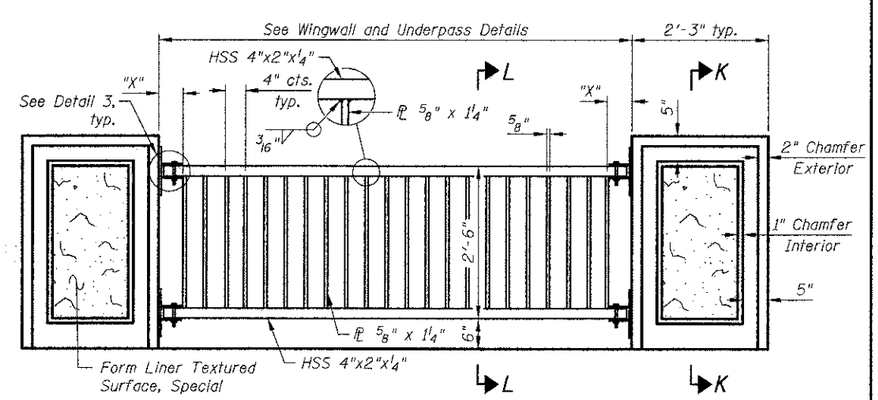

TYPICAL RAILING ELEVATION

Dimension "X" Equals Remaining Distance After Even Plate Spacing

See Wingwall and Underpass sheets for Bills of Material

CIVILTECH
450 E Devon Ave, Suite 300
Itasca, Illinois 60143
Tel: 630.773.3900 Fax: 630.773.3975
www.civiltechinc.com

DRAWN	K. BOCHNOWSKI	REVISED	-
DESIGNED	M. LANGE	REVISED	-
CHECKED	G. HATLESTAD	REVISED	-
DATE	DECEMBER 17, 2012	REVISED	-

STATE OF ILLINOIS
DEPARTMENT OF TRANSPORTATION

ARCHITECTURAL DETAILS
GRASS LAKE ROAD OVER BIKE PATH
STRUCTURE NO. 049-3070

SHEET NO. S8 OF S10 SHEETS

F.A.U. RTE.	SECTION	COUNTY	TOTAL SHEETS	SHEET NO.
Q174	09-P0075-15-BT	LAKE	74	30

CONTRACT NO. 63778

ILLINOIS FED. AID PROJECT

J:\2617\CADD\Final Plans\Underpass\08_arch_details_r2.dgn
kb 12/12/2012 14:22:23 PM