04-26-13 LETTING ITEM 145

F.A. RTE.	SECTION	COUNTY	TOTAL SHEETS	SHEET NO.
*	**	***	17	1
	ILLINOIS	CONTRACT NO. 70A11		

* ROUTES FAP 749 (IL 133) & FAP 332 (IL 1)
** POSTING MITIGATION FY2013-1
*** DOUGLAS / VERMILION

D-95-040-12

STATE OF ILLINOIS
DEPARTMENT OF TRANSPORTATION
DIVISION OF HIGHWAYS

PROPOSED HIGHWAY PLANS

VARIOUS ROUTES
SECTION POSTING MITIGATION FY2013-1
CULVERT REHABILITATION
DOUGLAS /VERMILION COUNTIES
VARIOUS LOCATIONS (POSTING MITIGATION)

C-95-040-12

S.N. 021-8028
F.A.P. 749 (IL 133)
LOCATION #1

S.N. 092-0130
F.A.P. 332 (IL 1)
LOCATION #2

FOR LOCATION MAPS, SEE SHEET NO. 2
FOR INDEX OF SHEETS, SEE SHEET NO. 3
FOR SUMMARY OF QUANTITIES, SEE SHEET NO. 4

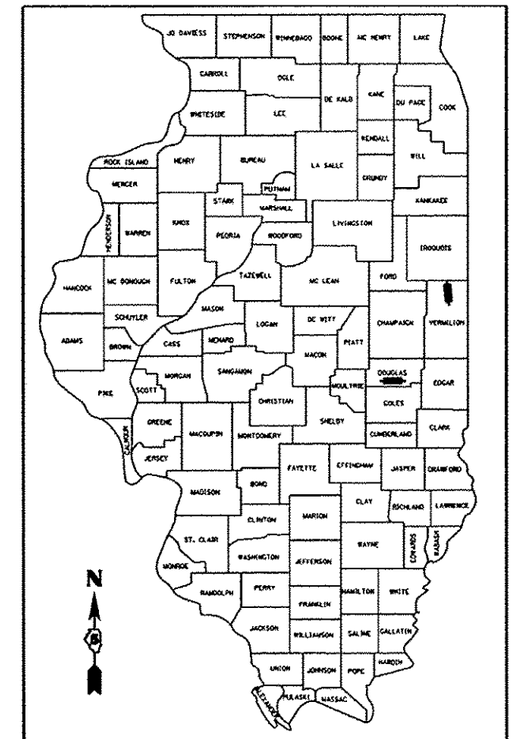

ADT:
LOCATION #1: 2300 (2012)
LOCATION #2: 5250 (2012)

DESIGN DESIGNATION
N/A

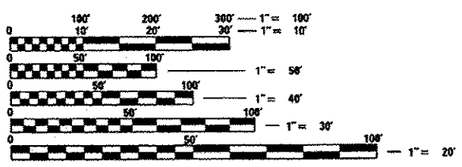

FULL SIZE PLANS HAVE BEEN PREPARED USING STANDARD ENGINEERING SCALES. REDUCED SIZED PLANS WILL NOT CONFORM TO STANDARD SCALES. IN MAKING MEASUREMENTS ON REDUCED PLANS, THE ABOVE SCALES MAY BE USED.

J.U.L.I.E.
JOINT UTILITY LOCATION INFORMATION FOR EXCAVATION
1-800-892-0123 TOWNSHIPS
OR 811 ARCOLA, GRANT

PROJECT ENGINEER: JASON STULTS
PROJECT MANAGER: RUSTIN KEYS
DESIGNER: DAVID JAYME
PHONE: (217) 465-4181
CONTRACT NO. 70A11

(SEE SHEET 2 FOR LOCATION MAPS)

GROSS LENGTH = 35.00 FT. = 0.007 MILE
NET LENGTH = 35.00 FT. = 0.007 MILE

STATE OF ILLINOIS
DEPARTMENT OF TRANSPORTATION
DIVISION OF HIGHWAYS

SUBMITTED JAN 28 20 13
Joseph S Crowe
DEPUTY DIRECTOR OF HIGHWAYS, REGION ENGINEER
March 22 20 13
John D. Baranzelli, P.E. /br
ENGINEER OF DESIGN AND ENVIRONMENT
March 22 20 13
Omer Osman, P.E. /br
DIRECTOR OF HIGHWAYS, CHIEF ENGINEER

PRINTED BY THE AUTHORITY OF THE STATE OF ILLINOIS

LOCATION #1

FAP 749 (IL 133)
DOUGLAS COUNTY

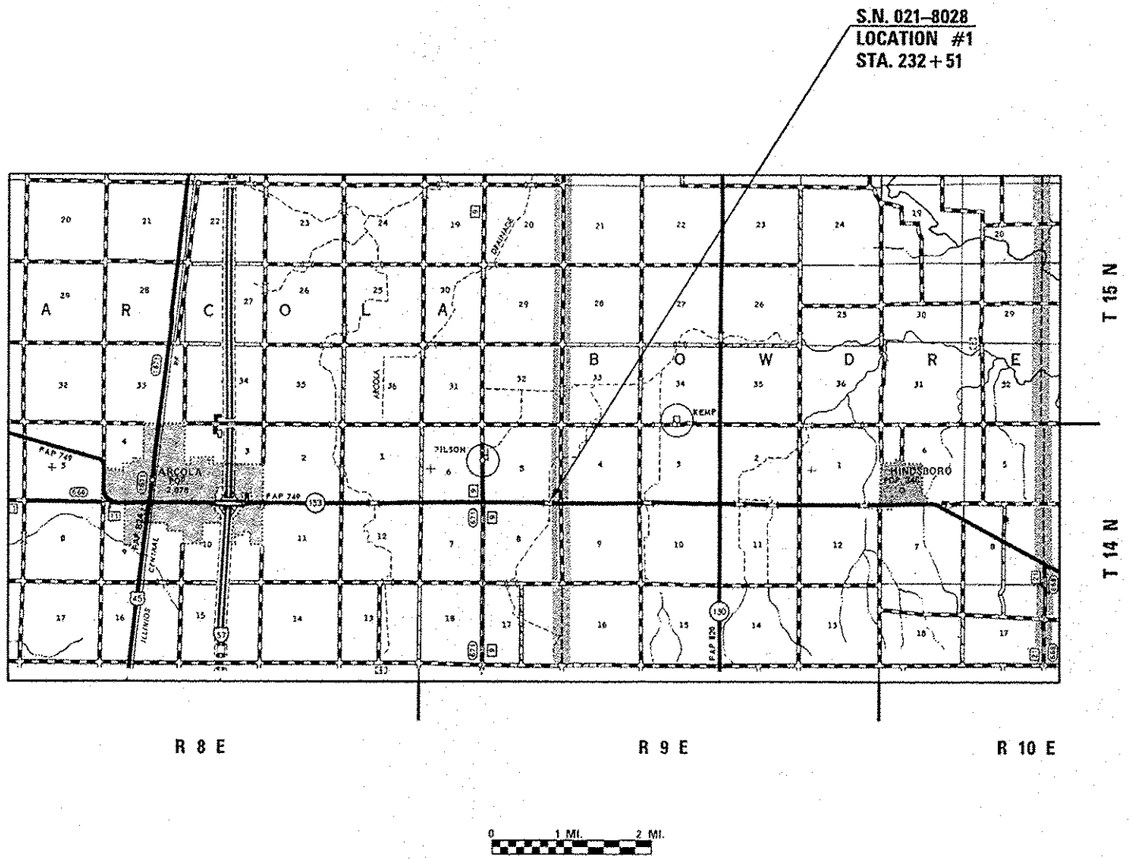

LOCATION #1

PROJECT BEGINS STA. 232+45.5
PROJECT ENDS STA. 232+56.5

LOCATION #2

FAP 332 (IL 1)
VERMILION COUNTY

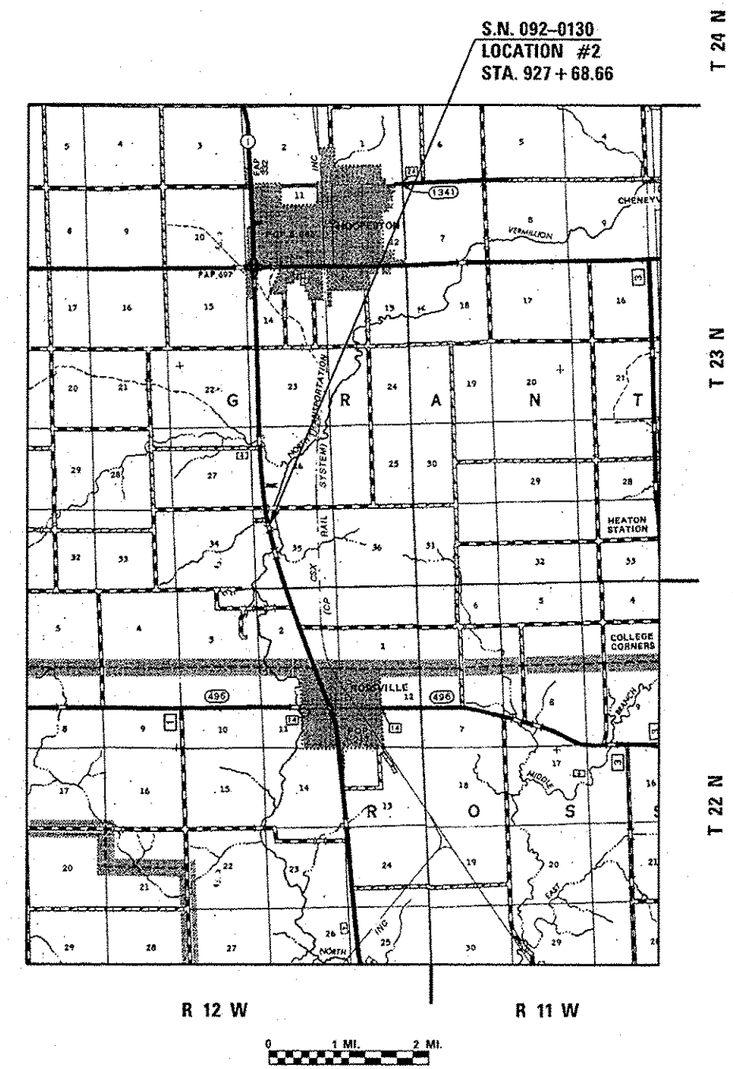

LOCATION #2

PROJECT BEGINS STA. 927+56.66
PROJECT ENDS STA. 927+80.66

* ROUTES FAP 749 (IL 133) & FAP 332 (IL 1)
** POSTING MITIGATION FY2013-1
*** DOUGLAS / VERMILION

FILE NAME = c:\pw_work\pwidot\joymadf\d0318412\D570411-sht-cover.dgn	USER NAME = joymadf	DESIGNED -	REVISED -	STATE OF ILLINOIS DEPARTMENT OF TRANSPORTATION	LOCATION MAPS		F.A. RTE.	SECTION	COUNTY	TOTAL SHEETS	SHEET NO.
	PLOT SCALE = 40.0000 ' / in.	DRAWN - DFJ	REVISED -				*	**	***	17	2
	PLOT DATE = 1/20/2013	CHECKED -	REVISED -				CONTRACT NO. 70A11				
		DATE - 12/20/12	REVISED -		SCALE:	SHEET NO. 01 OF 01 SHEETS	STA.	TO STA.	ILLINOIS FED. AID PROJECT		

INDEX OF SHEETS

SHEET NO.	DESCRIPTION
1	COVER SHEET
2	LOCATION MAPS
3	INDEX OF SHEETS, LIST OF HIGHWAY STANDARDS, GENERAL NOTES
4	SUMMARY OF QUANTITIES
5	TYPICAL SECTIONS
6	PLAN SHEETS
7 - 8	S.N. 021 - 8028 SLAB DETAILS
09 - 10	S.N. 092 - 0130 SLAB DETAILS
11 - 13	STAGING DETAILS
13 - 17	PAVEMENT MARKING AND MARKERS (RURAL & URBAN APPLICATIONS) DETAIL

LIST OF HIGHWAY STANDARDS

STANDARD NO.	DESCRIPTION
000001-06	STANDARD SYMBOLS, ABBREVIATIONS AND PATTERNS
001001-02	AREAS OF REINFORCEMENT BARS
001006	DECIMAL OF AN INCH AND A FOOT
701011-03	OFF-ROAD MOVING OPERATIONS, 2L, 2W, DAY ONLY
701301-04	LANE CLOSURE, 2L, 2W, SHORT TIME OPERATIONS
701311-03	LANE CLOSURE, 2L, 2W, MOVING OPERATIONS- DAY ONLY
701316-07	LANE CLOSURE, 2L, 2W, BRIDGE REPAIR, FOR SPEEDS > 45 MPH
701901-02	TRAFFIC CONTROL DEVICES
780001-03	TYPICAL PAVEMENT MARKINGS

GENERAL NOTES

G.N.-100
ENGLISH UNITS OF MEASUREMENT SHALL GOVERN OVER AND SUPERSEDE ANY METRIC UNITS SHOWN IN THIS CONTRACT. WHERE INCLUDED, METRIC UNITS ARE FOR INFORMATION ONLY.

G.N.-100A
ELECTRONIC FILES AND/OR ELECTRONIC SURVEY INFORMATION INCLUDING CADD FILES WILL NOT BE AVAILABLE TO THE CONTRACTOR.

NO COMMITMENTS

* ROUTES FAP 749 (IL 133) & FAP 332 (IL 1)
** POSTING MITIGATION FY2013-1
*** DOUGLAS / VERMILION

FILE NAME = c:\pw_work\pwidot\joymedf\d0318412\D57B4-11-sht-gennote.dgn	USER NAME = joymedf	DESIGNED -	REVISED -	STATE OF ILLINOIS DEPARTMENT OF TRANSPORTATION	INDEX OF SHEETS /GENERAL NOTES LIST OF HIGHWAY STANDARDS	F.A. RTE.	SECTION	COUNTY	TOTAL SHEETS	SHEET NO.
		DRAWN - DFJ	REVISED -			*	**	***	17	3
	PLOT SCALE = 40.0000 ' / in.	CHECKED -	REVISED -					CONTRACT NO. 70A11		
	PLOT DATE = 1/28/2013	DATE - 12/20/12	REVISED -		SCALE: SHEET NO. 01 OF 01 SHEETS STA. TO STA.		ILLINOIS FED. AID PROJECT			

SUMMARY OF QUANTITIES

LOCATION OF WORK:	DOUGLAS CO.	VERMILION CO.
	F.A.P. 749	F.A.P. 332
	IL 133	IL 1
	S.N. 021-8028	S.N. 092-0130
	LOCATION #1	LOCATION #2
	RURAL	RURAL
FUNDING BREAKOUT:	100% STATE	100% STATE
CONSTRUCTION TYPE CODE:	0014	0014

CODE NO.	DESCRIPTION	UNIT	TOTAL QUANTITY	QUANTITY	QUANTITY
48102100	AGGREGATE WEDGE SHOULDER, TYPE B	TON	2.0	0.8	1.2
50300255	CONCRETE SUPERSTRUCTURE	CU YD	24.0	7.1	16.9
50500405	F & E STRUCTURAL STEEL	POUND	2,650	0	2,650
50800205	REINFORCEMENT BARS, EPOXY COATED	POUND	8,640	2,110	6,530
50800515	BAR SPLICERS	EACH	82	32	50
67100100	MOBILIZATION	L SUM	1	0.5	0.5
70100100	TRAFFIC CONTROL AND PROTECTION, STANDARD 701316	EACH	2	1	1
70103815	TRAFFIC CONTROL SURVEILLANCE	CAL DA	14	7	7
70106500	TEMPORARY BRIDGE TRAFFIC SIGNALS	EACH	2	1	1
70301000	WORK ZONE PAVEMENT MARKING REMOVAL	SQ FT	715	400	315
78001110	PAINT PAVEMENT MARKING - LINE 4"	FOOT	120	40	80
X4422000	PARTIAL DEPTH REMOVAL, (VARIABLE DEPTH)	SQ YD	107.7	31.8	75.9

* ROUTES FAP 749 (IL 133) & FAP 332 (IL 1)
** POSTING MITIGATION FY2013-1
*** DOUGLAS / VERMILION

FILE NAME = c:\pw_work\pwidot\joymedf\d0318412\D570411-sht-SOQ.dgn	USER NAME = joymedf	DESIGNED -	REVISED -	STATE OF ILLINOIS DEPARTMENT OF TRANSPORTATION	SUMMARY OF QUANTITIES	F.A. RTE.	SECTION	COUNTY	TOTAL SHEETS	SHEET NO.
		DRAWN - DFJ	REVISED -			*	**	***	17	4
	PLOT SCALE = 40.0000 ' / in.	CHECKED -	REVISED -					CONTRACT NO. 70A11		
	PLOT DATE = 1/22/2013	DATE - 1/22/13	REVISED -		SCALE: SHEET NO. 1 OF 1 SHEETS STA. TO STA.		ILLINOIS FED. AID PROJECT			

EXISTING TYPICAL SECTION

LOCATION #1 (S.N. 021-8028)
FAP 749 (IL 133)
STA. 158+45.50 TO STA. 243+00.00

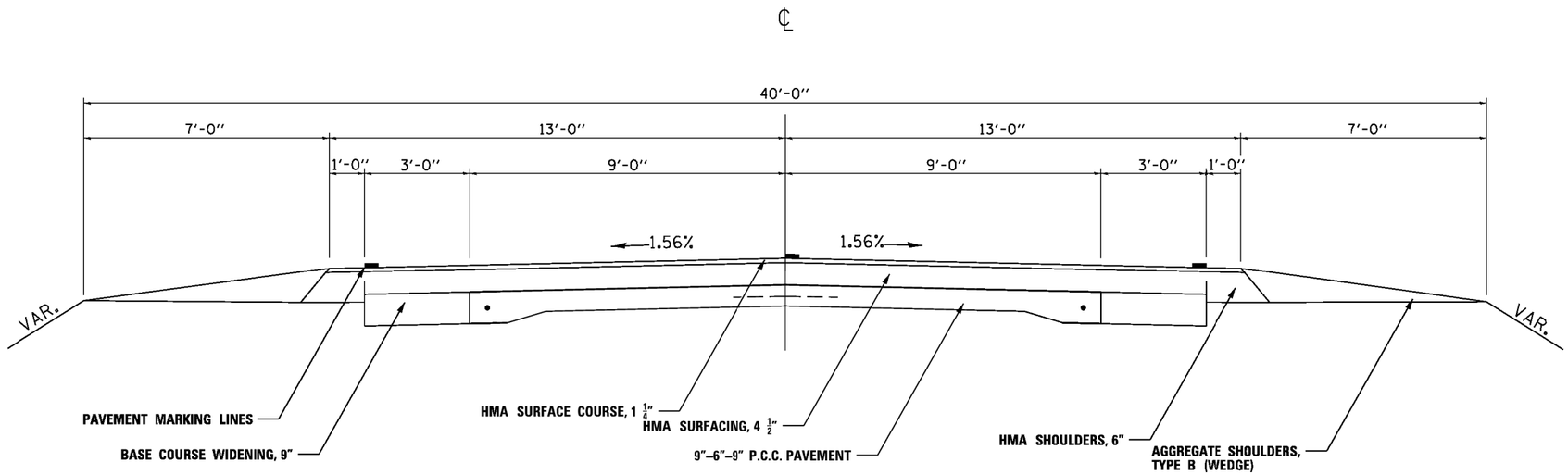

EXISTING TYPICAL SECTION

LOCATION #2 (S.N. 092-0130)
FAP 332 (IL 1)
STA. 831+00.00 TO STA. 1084+50.00

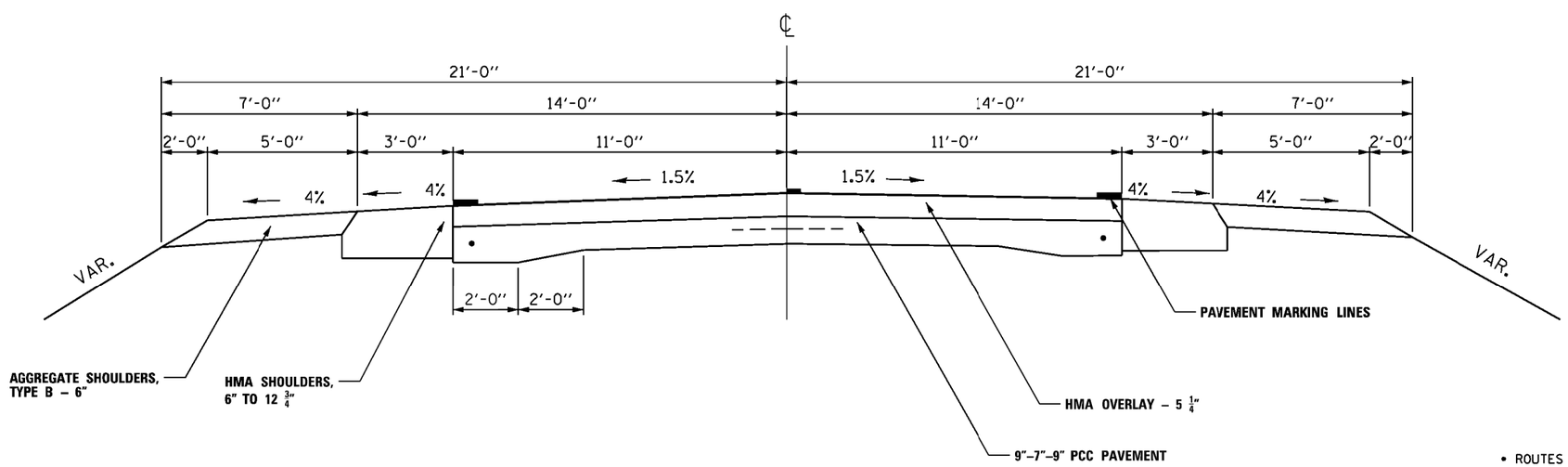

• ROUTES FAP 749 (IL 133) & FAP 332 (IL 1)

•• POSTING MITIGATION FY2013-1

••• DOUGLAS / VERMILION

FILE NAME =	USER NAME = jaymedf	DESIGNED -	REVISED - ·	STATE OF ILLINOIS DEPARTMENT OF TRANSPORTATION	TYPICAL SECTIONS			F.A. RTE.	SECTION	COUNTY	TOTAL SHEETS / SHEET NO.
c:\pw_work\pwidot\jaymedf\d0318412\D570411-sht-typical.dgn		DRAWN - DFJ	REVISED - ·					•	••	•••	17 / 5
	PLOT SCALE = 40.0000 ' / in.	CHECKED -	REVISED - ·							CONTRACT NO. 70A11	
	PLOT DATE = 1/22/2013	DATE - 12/20/12	REVISED - ·		SCALE:	SHEET NO. 01 OF 01 SHEETS	STA. TO STA.			ILLINOIS FED. AID PROJECT	

LOCATION #1

S.N. 021–8028
FAP 749 (IL 133)
DOUGLAS COUNTY
STA. 232 + 51

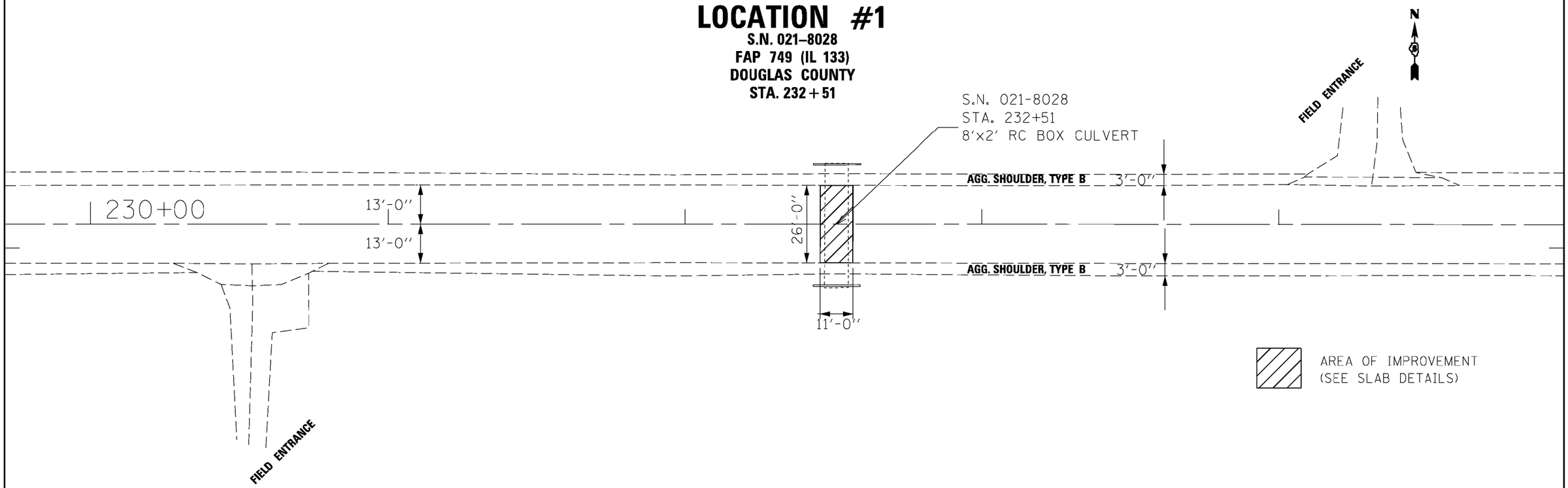

LOCATION #2

S.N. 092–0130
FAP 332 (IL 1)
VERMILION COUNTY
STA. 927 + 68.66

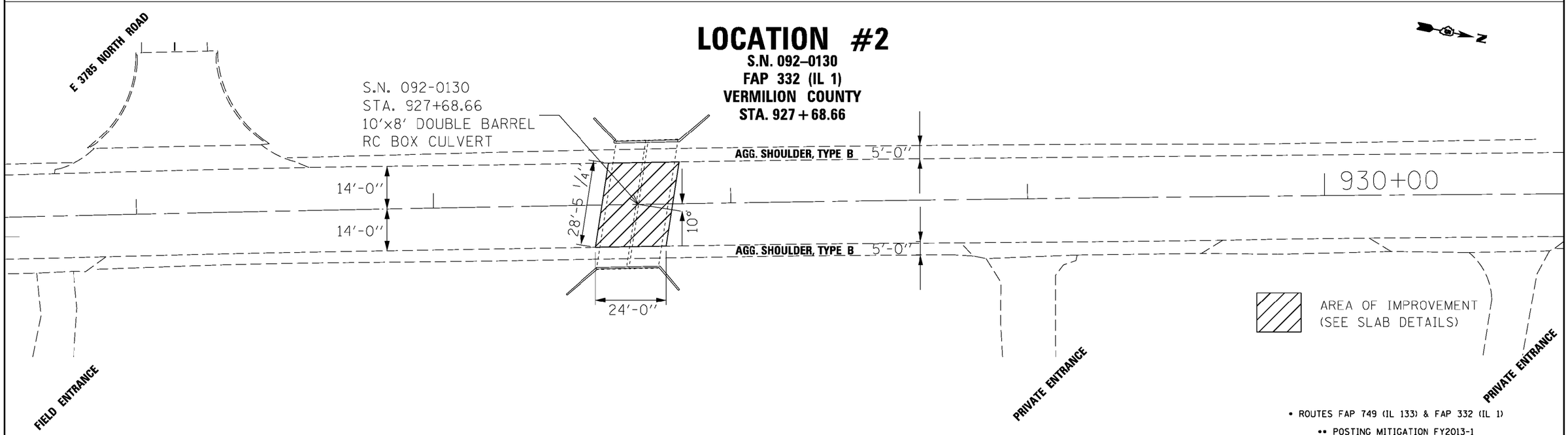

• ROUTES FAP 749 (IL 133) & FAP 332 (IL 1)

•• POSTING MITIGATION FY2013-1

••• DOUGLAS / VERMILION

FILE NAME = c:\pw_work\pwidot\jaymedf\d0318412\D570411-sht-plan.dgn	USER NAME = jaymedf	DESIGNED -	REVISED -	STATE OF ILLINOIS DEPARTMENT OF TRANSPORTATION	PLAN SHEET LOCATION # 1 & LOCATION # 2	F.A. RTE.	SECTION	COUNTY	TOTAL SHEETS / SHEET NO.
		DRAWN - DFJ	REVISED -			•	••	•••	17 / 6
	PLOT SCALE = 100.0000 ' / in.	CHECKED -	REVISED -			CONTRACT NO. 70A11			
$MODELNAME$	PLOT DATE = 1/22/2013	DATE - 12/20/12	REVISED -		SCALE: SHEET 01 OF 01 SHEETS STA. TO STA.	ILLINOIS FED. AID PROJECT			

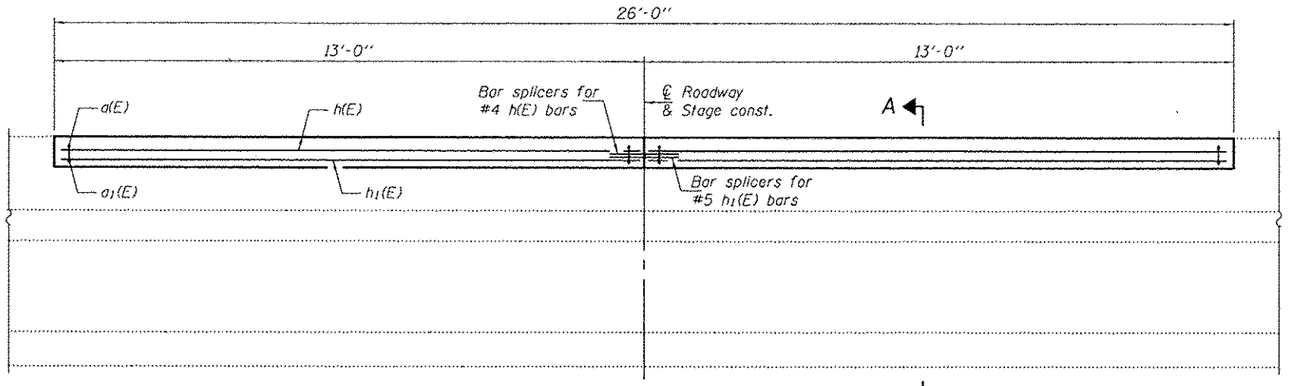

LONGITUDINAL SECTION

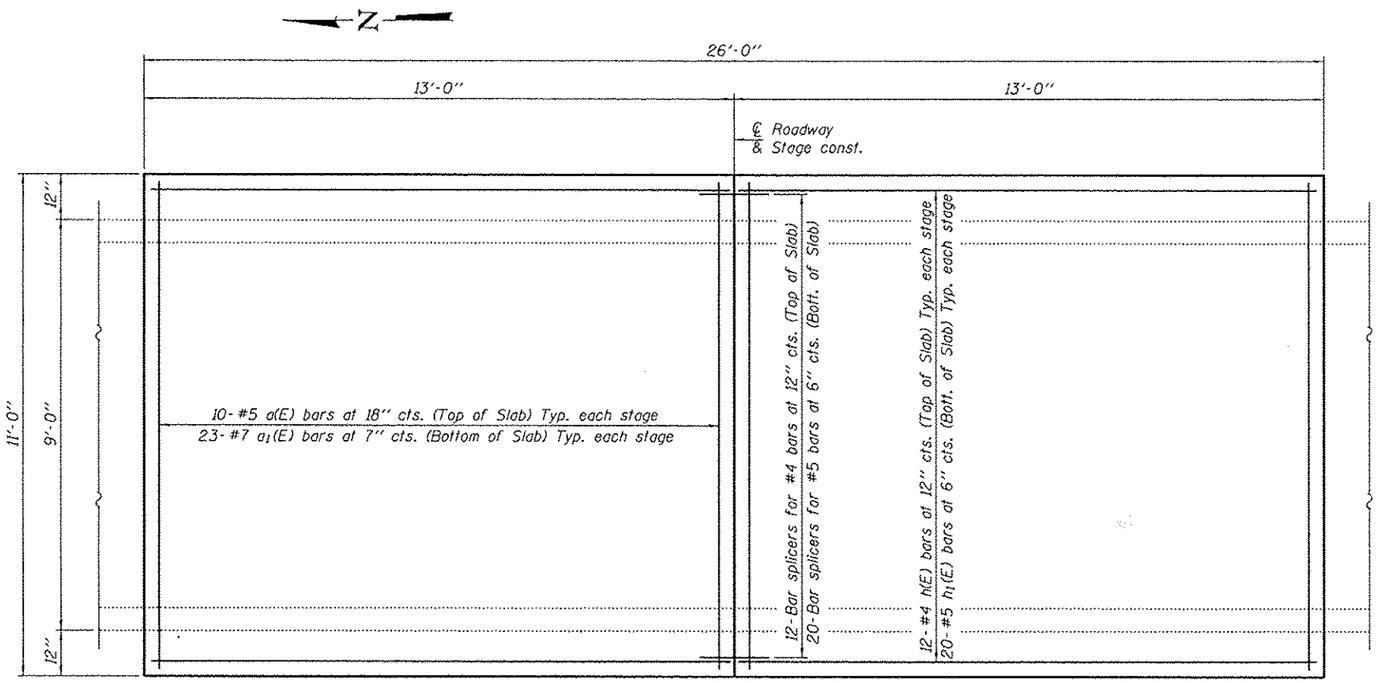

PLAN

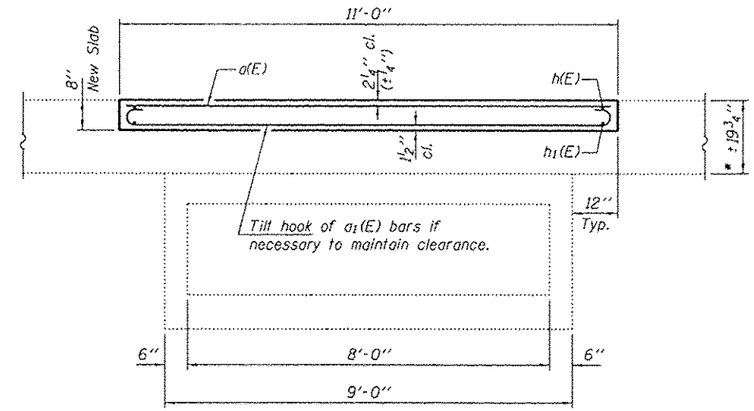

SECTION A-A

* Remove per Partial Depth Removal table and replace with 8" concrete slab as shown. Slope to match roadway. Cost of removal included with Partial Depth Removal (Variable Depth). Removal to be limited to the 8" shown.

PARTIAL DEPTH REMOVAL

(Based on coring report)

	EB	WB
Layer	Approx.	Depth
HMA	8"	5.5"
PCC	0"	2.5"
Total	8"	8"

GENERAL NOTES

Plan dimensions and details relative to existing plans are subject to nominal construction variations. The Contractor shall field verify existing dimensions and details affecting new construction and make necessary approved adjustments prior to construction or ordering of materials. Such variations shall not be cause for additional compensation for a change in scope of the work, however, the Contractor will be paid for the quantity actually furnished at the unit price bid for the work.

Reinforcement bars designated (E) shall be epoxy coated.

The slab surface shall have its final finish tined according to Article 420.09(e)(1) of the Standard Specifications. Cost included with Concrete Superstructure.

DESIGN STRESSES

FIELD UNITS

f'c = 3,500 psi

fy = 60,000 psi (Reinf.)

BILL OF MATERIAL

Bar	No.	Size	Length	Shape
a(E)	20	#5	10'-8"	
a1(E)	46	#7	12'-4"	
h(E)	24	#4	12'-8"	
h1(E)	40	#5	12'-8"	
Bar Splicers			Each	32
Partial Depth Removal (Variable Depth)			Sq. Yds.	31.8
Reinforcement Bars, Epoxy Coated			Pound	2110
Concrete Superstructure			Cu. Yds.	7.1

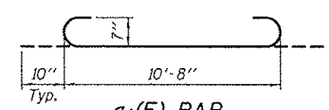

a1(E) BAR

EXPIRES 11-30-2014

DESIGNED DAB	EXAMINED	DATE - MARCH 14, 2013	STATE OF ILLINOIS DEPARTMENT OF TRANSPORTATION	SLAB DETAILS SN 021-8028	
CHECKED VHV	ACTING ENGINEER OF STRUCTURAL SERVICES				
DRAWN baliva	PASSED				
CHECKED DAB VHV	ACTING ENGINEER OF BRIDGES AND STRUCTURES			SHEET NO. 1 OF 2 SHEETS	

F.A.P. RTE.	SECTION	COUNTY	TOTAL SHEETS	SHEET NO.
749	POSTING MITIGATION FY2013-1	DOUGLAS	17	7
		CONTRACT NO. 70A11		
	ILLINOIS	FED. AID PROJECT		

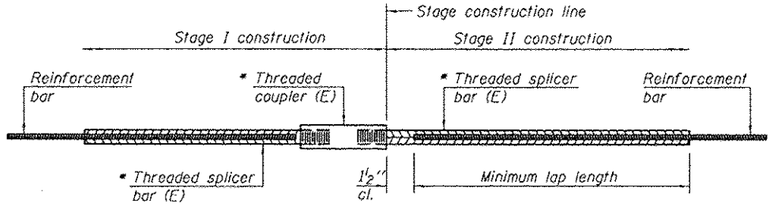

STANDARD BAR SPLICER ASSEMBLY

Minimum Lap Lengths					
Bar size to be spliced	Table 1	Table 2	Table 3	Table 4	Table 5
3, 4	1'-5"	1'-11"	2'-1"	2'-4"	2'-3"
5	1'-9"	2'-5"	2'-7"	2'-11"	2'-10"
6	2'-1"	2'-11"	3'-1"	3'-6"	3'-4"
7	2'-9"	3'-10"	4'-2"	4'-8"	4'-6"
8	3'-8"	5'-1"	5'-5"	6'-2"	5'-10"
9	4'-7"	6'-5"	6'-10"	7'-9"	7'-5"

Table 1: Black bar, 0.8 Class C
Table 2: Black bar, Top bar lap, 0.8 Class C
Table 3: Epoxy bar, 0.8 Class C
Table 4: Epoxy bar, Top bar lap, 0.8 Class C
Table 5: Epoxy bar, Top bar lap, Class B

Threaded splicer bar length = min. lap length + 1½" + thread length

* Epoxy not required on Bar Splicer Assembly components used in conjunction with black bars.

Location	Bar size	No. assemblies required	Table for minimum lap length
Top of slab	#4	12	3
Bottom of slab	#5	20	3

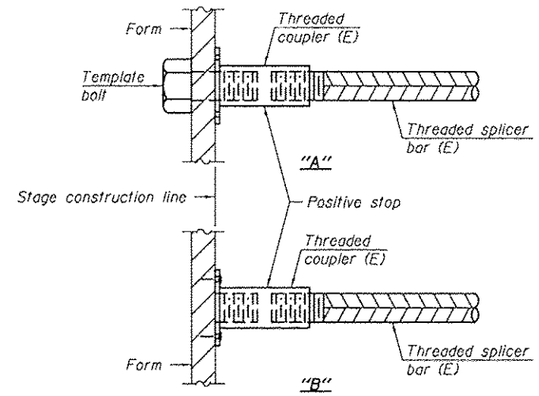

INSTALLATION AND SETTING METHODS

"A" : Set bar splicer assembly by means of a template bolt.
"B" : Set bar splicer assembly by nailing to wood forms or cementing to steel forms.
(E) : Indicates epoxy coating.

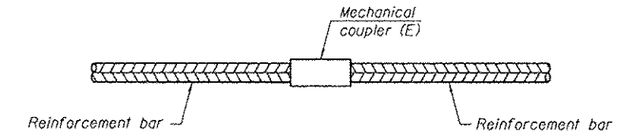

STANDARD MECHANICAL SPLICER

Location	Bar size	No. assemblies required

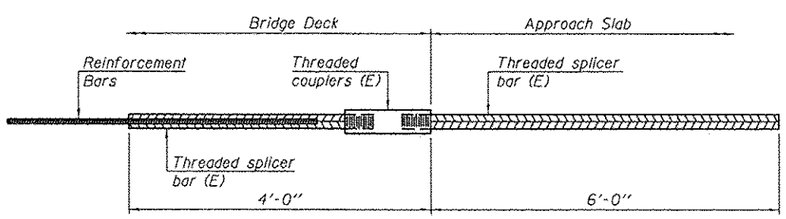

BAR SPLICER ASSEMBLY FOR #5 BAR ON INTEGRAL OR SEMI-INTEGRAL ABUTMENTS

No. required =

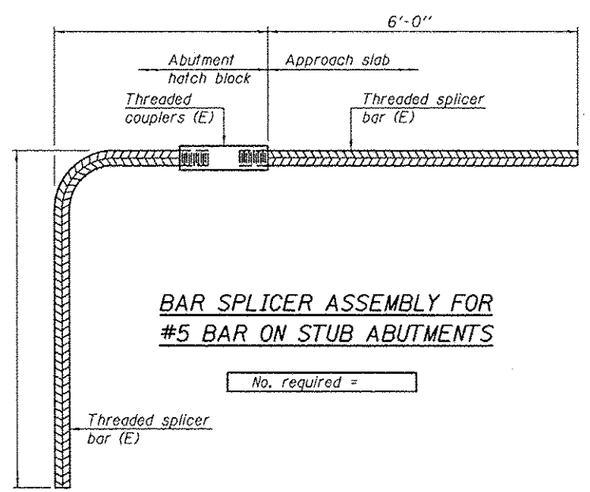

BAR SPLICER ASSEMBLY FOR #5 BAR ON STUB ABUTMENTS

No. required =

NOTES

Splicer bars shall be deformed with threaded ends and have a minimum 60 ksi yield strength.
All reinforcement shall be lapped and tied to the splicer bars.
Bar splicer assemblies shall be epoxy coated according to the requirements for reinforcement bars. See Section 508 of the Standard Specifications.
See special provision for Mechanical Splicers.
See approved list of bar splicer assemblies and mechanical splicers for alternatives.

BSD-1 7-1-10

DESIGNED DAB	EXAMINED	ACTING ENGINEER OF STRUCTURAL SERVICES	DATE - MARCH 14, 2013
CHECKED VHV	PASSED	ACTING ENGINEER OF BRIDGES AND STRUCTURES	
DRAWN baliva			
CHECKED DAB VHV			

STATE OF ILLINOIS
DEPARTMENT OF TRANSPORTATION

BAR SPLICER ASSEMBLY AND MECHANICAL SPLICER DETAILS
SN 021-8028
SHEET NO. 2 OF 2 SHEETS

F.A.P. RTE.	SECTION	COUNTY	TOTAL SHEETS	SHEET NO.
749	POSTING MITIGATION FY2013-1	DOUGLAS	17	8

CONTRACT NO. 70A11
ILLINOIS FED. AID PROJECT

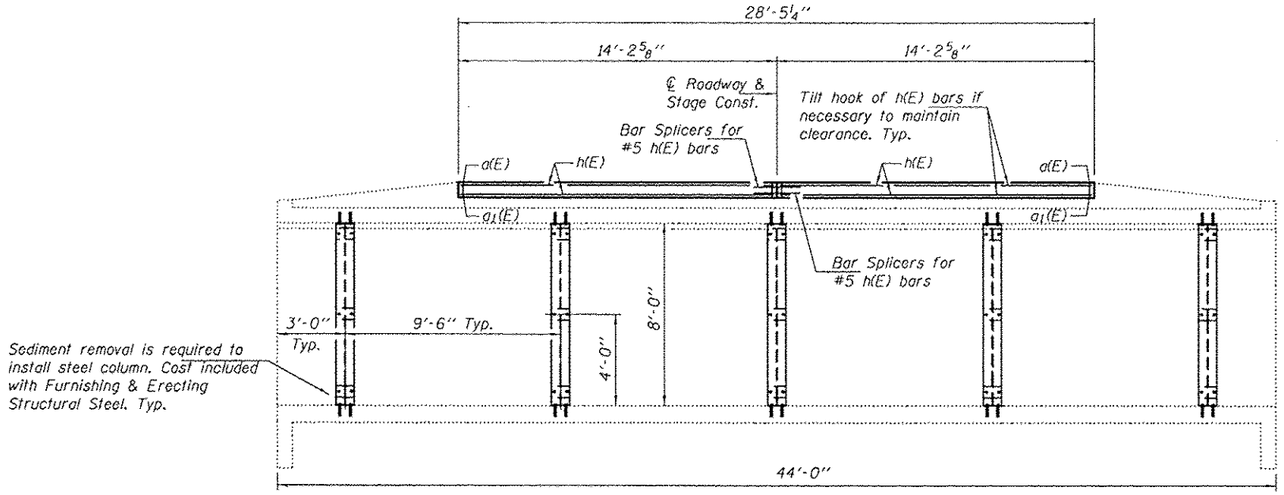

LONGITUDINAL SECTION

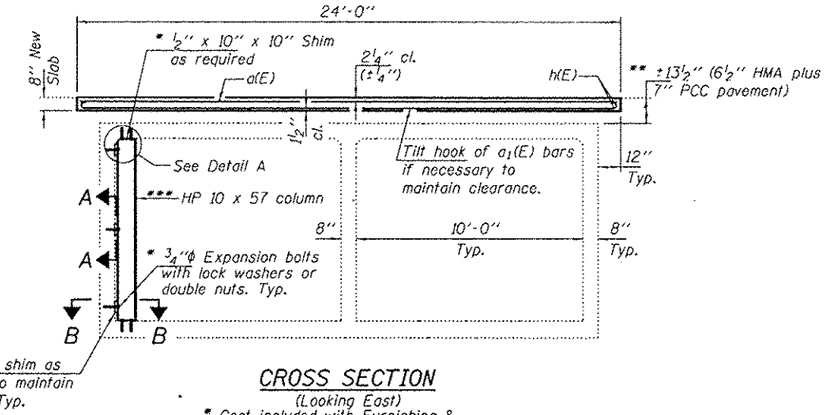

CROSS SECTION

(Looking East)

* Cost included with Furnishing & Erecting Structural Steel.

** Remove 6½" of existing HMA overlay and 1½" of PCC pavement and replace with 8" concrete slab as shown. Slope to match roadway. Cost of removal included with Partial Depth Removal (Variable Depth). Maximum removal depth to be limited to 8".

*** North wall only.

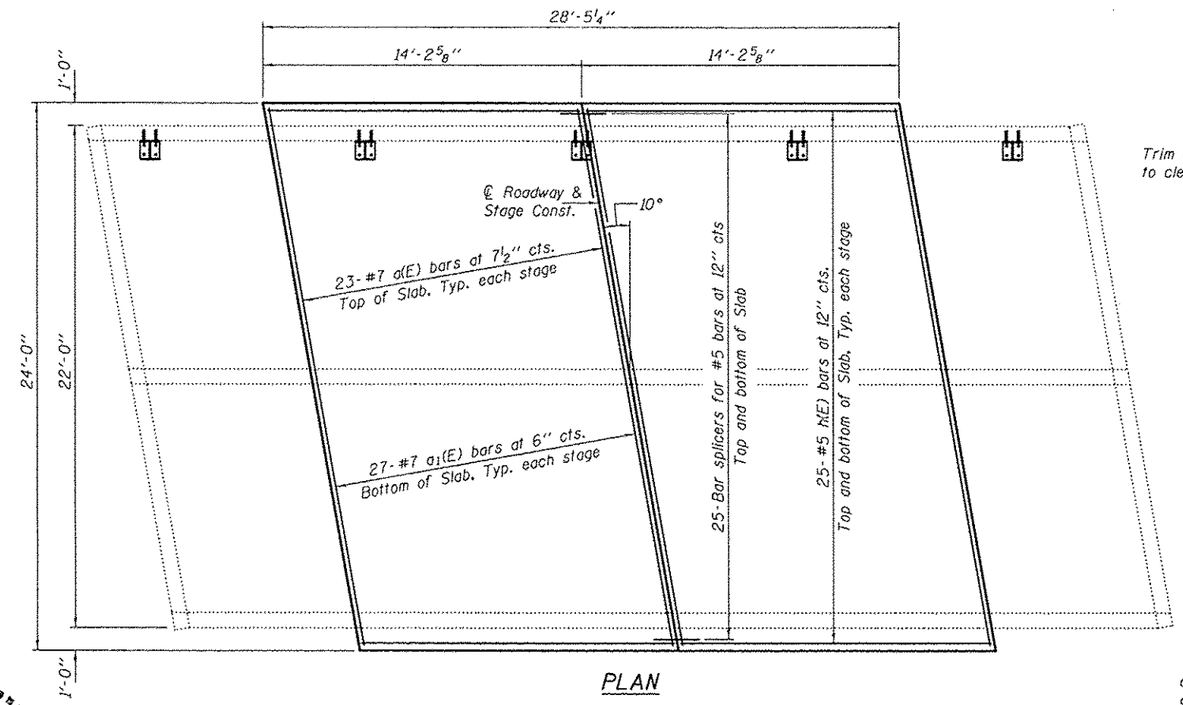

PLAN

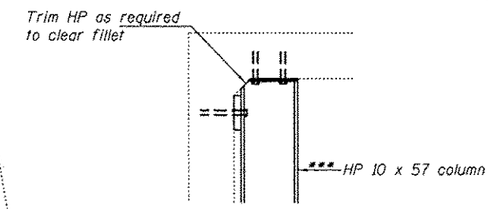

DETAIL A

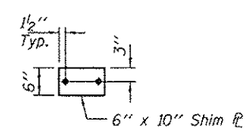

SECTION A-A

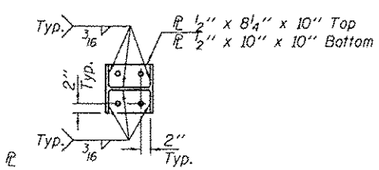

SECTION B-B

GENERAL NOTES

Plan dimensions and details relative to existing plans are subject to nominal construction variations. The Contractor shall field verify existing dimensions and details affecting new construction and make necessary approved adjustments prior to construction or ordering of materials. Such variations shall not be cause for additional compensation for a change in scope of the work, however, the Contractor will be paid for the quantity actually furnished at the unit price bid for the work.

Reinforcement bars designated (E) shall be epoxy coated.

The slab surface shall have its final finish tined according to Article 420.09(e)(1) of the Standard Specifications. Cost included with Concrete Superstructures.

All structural steel shall conform to AASHTO Classification M-270 Gr. 36, unless otherwise noted.

All structural steel shall be shop painted with the inorganic zinc rich primer per AASHTO M300, Type 1. Cost included with Furnishing and Erecting Structural Steel.

TOTAL BILL OF MATERIAL

Bar	No.	Size	Length	Shape
a(E)	46	#7	24'-0"	
a1(E)	54	#7	25'-8"	
h(E)	100	#5	13'-10"	
Bar Splicers			Each	50
Partial Depth Removal (Variable Depth)			Sq. Yd.	75.9
Reinforcement Bars, Epoxy Coated			Pound	6530
Concrete Superstructure			Cu. Yd.	16.9
Furnishing & Erecting Structural Steel			Pound	2650

LICENSED STRUCTURAL ENGINEER
DAVID CARL PUZEY
081-005470
SPRINGFIELD ILLINOIS
STATE OF ILLINOIS

EXPIRES 11-30-2014

DESIGN STRESSES

FIELD UNITS

f'c = 3,500 psi

fy = 60,000 psi (Reinf.)

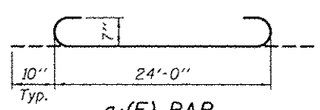

a1(E) BAR

DESIGNED DAB	EXAMINED	DATE MARCH 14, 2013	STATE OF ILLINOIS DEPARTMENT OF TRANSPORTATION
CHECKED VHV	ACTING ENGINEER OF STRUCTURAL SERVICES		
DRAWN baliva	PASSED	REVISED	
CHECKED DAB VHV DAB VHV	ACTING ENGINEER OF BRIDGES AND STRUCTURES	REVISED	

GENERAL PLAN & ELEVATION
ILLINOIS ROUTE 1 OVER N. FORK VERMILION RIVER
SN 092-0130
SHEET 1 OF 2 SHEETS

F.A.P. RTE.	SECTION	COUNTY	TOTAL SHEETS	SHEET NO.
332	POSTING MITIGATION FY2013-1	VERMILION	17	9
		CONTRACT NO. 70A11		
		ILLINOIS FED. AID PROJECT		

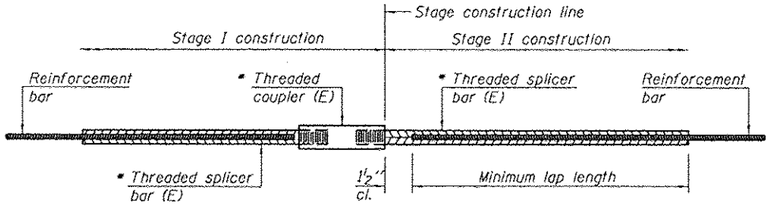

STANDARD BAR SPLICER ASSEMBLY

Minimum Lap Lengths						
Bar size to be spliced	Table 1	Table 2	Table 3	Table 4	Table 5	Table 6
3, 4	1'-5"	1'-11"	2'-1"	2'-4"	2'-7"	2'-11"
5	1'-9"	2'-5"	2'-7"	2'-11"	3'-3"	3'-8"
6	2'-1"	2'-11"	3'-1"	3'-6"	3'-10"	4'-5"
7	2'-9"	3'-10"	4'-2"	4'-8"	5'-2"	5'-10"
8	3'-8"	5'-1"	5'-5"	6'-2"	6'-9"	7'-8"
9	4'-7"	6'-5"	6'-10"	7'-9"	8'-7"	9'-8"

Table 1: Black bar, 0.8 Class C
Table 2: Black bar, Top bar lap, 0.8 Class C
Table 3: Epoxy bar, 0.8 Class C
Table 4: Epoxy bar, Top bar lap, 0.8 Class C
Table 5: Epoxy bar, Class C
Table 6: Epoxy bar, Top bar lap, Class C

Threaded splicer bar length = min. lap length + 1½" + thread length

* Epoxy not required on Bar Splicer Assembly components used in conjunction with black bars.

Location	Bar size	No. assemblies required	Table for minimum lap length
Top of Slab	#5	25	3
Bottom of Slab	#5	25	3

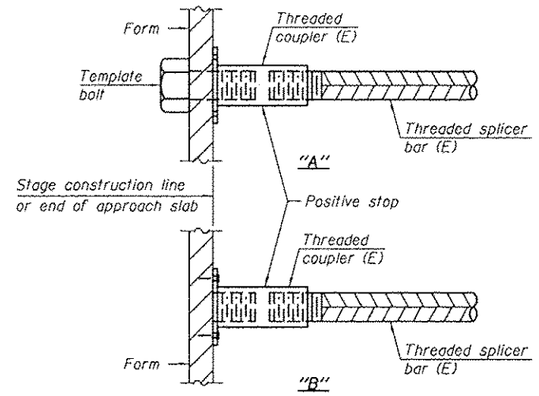

INSTALLATION AND SETTING METHODS

"A" : Set bar splicer assembly by means of a template bolt.
"B" : Set bar splicer assembly by nailing to wood forms or cementing to steel forms.
(E) : Indicates epoxy coating.

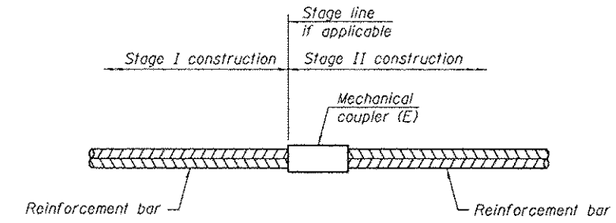

STANDARD MECHANICAL SPLICER

Location	Bar size	No. assemblies required

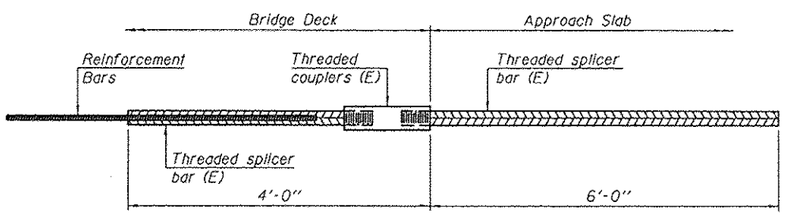

BAR SPLICER ASSEMBLY FOR #5 BAR ON INTEGRAL OR SEMI-INTEGRAL ABUTMENTS

No. required =

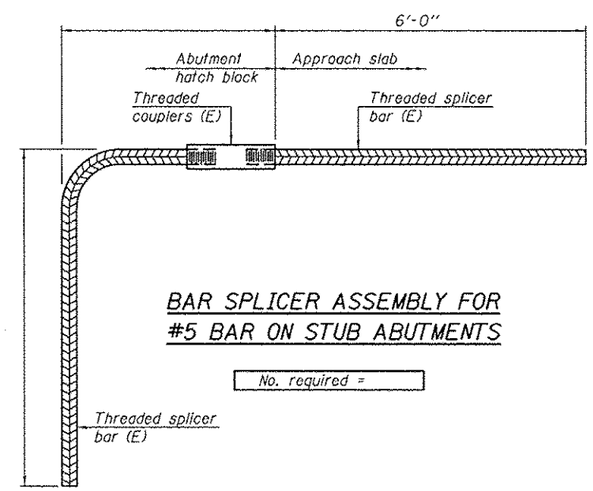

BAR SPLICER ASSEMBLY FOR #5 BAR ON STUB ABUTMENTS

No. required =

NOTES

Splicer bars shall be deformed with threaded ends and have a minimum 60 ksi yield strength.

All reinforcement shall be lapped and tied to the splicer bars.

Bar splicer assemblies shall be epoxy coated according to the requirements for reinforcement bars. See Section 508 of the Standard Specifications.

See approved list of bar splicer assemblies and mechanical splicers for alternatives.

BSD-1 1-27-12

DESIGNED DAB	EXAMINED	DATE MARCH 14, 2013	STATE OF ILLINOIS DEPARTMENT OF TRANSPORTATION
CHECKED VHV	ACTING ENGINEER OF STRUCTURAL SERVICES		
DRAWN baliva	PASSED	REVISED	
CHECKED DAB VHV	ACTING ENGINEER OF BRIDGES AND STRUCTURES	REVISED	

BAR SPLICER ASSEMBLY AND MECHANICAL SPLICER DETAILS
SN 092-0130
SHEET 2 OF 2 SHEETS

F.A.P. RTE.	SECTION	COUNTY	TOTAL SHEETS	SHEET NO.
332	POSTING MITIGATION FY2013-1	VERMILION	17	10
		CONTRACT NO. 70A11		
		ILLINOIS FED. AID PROJECT		

STAGE ONE

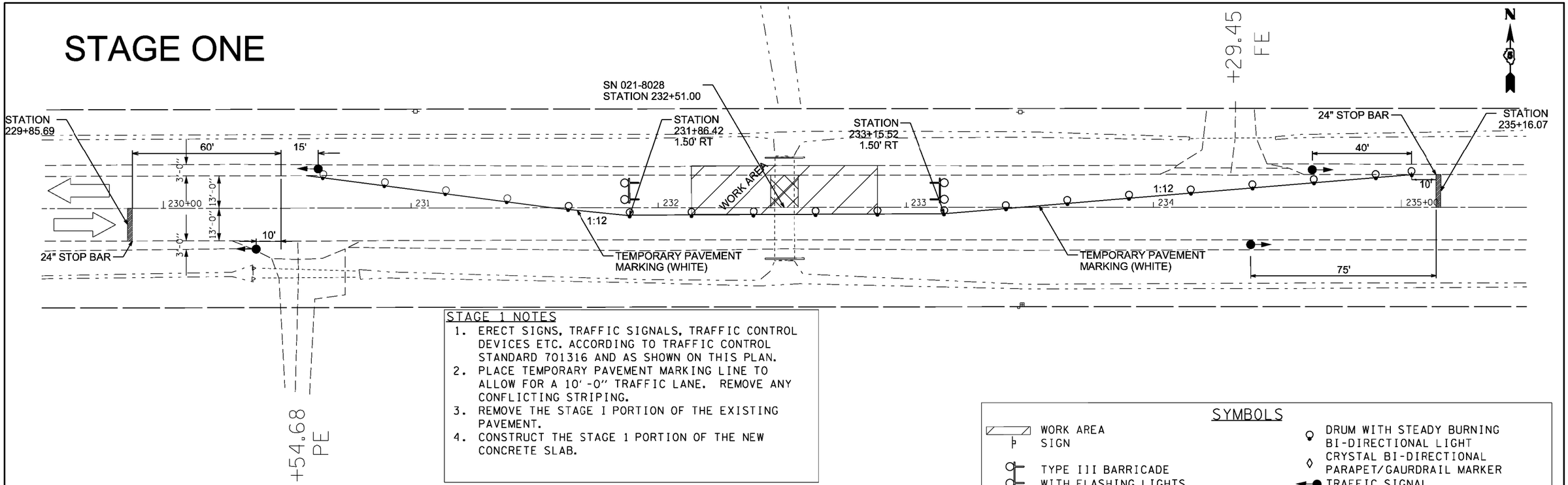

STAGE 1 NOTES

1. ERECT SIGNS, TRAFFIC SIGNALS, TRAFFIC CONTROL DEVICES ETC. ACCORDING TO TRAFFIC CONTROL STANDARD 701316 AND AS SHOWN ON THIS PLAN.
2. PLACE TEMPORARY PAVEMENT MARKING LINE TO ALLOW FOR A 10'-0" TRAFFIC LANE. REMOVE ANY CONFLICTING STRIPING.
3. REMOVE THE STAGE I PORTION OF THE EXISTING PAVEMENT.
4. CONSTRUCT THE STAGE 1 PORTION OF THE NEW CONCRETE SLAB.

SYMBOLS

- WORK AREA
- SIGN
- TYPE III BARRICADE WITH FLASHING LIGHTS
- DRUM WITH STEADY BURNING BI-DIRECTIONAL LIGHT
- CRYSTAL BI-DIRECTIONAL PARAPET/GAURDRAIL MARKER
- TRAFFIC SIGNAL

STAGE TWO

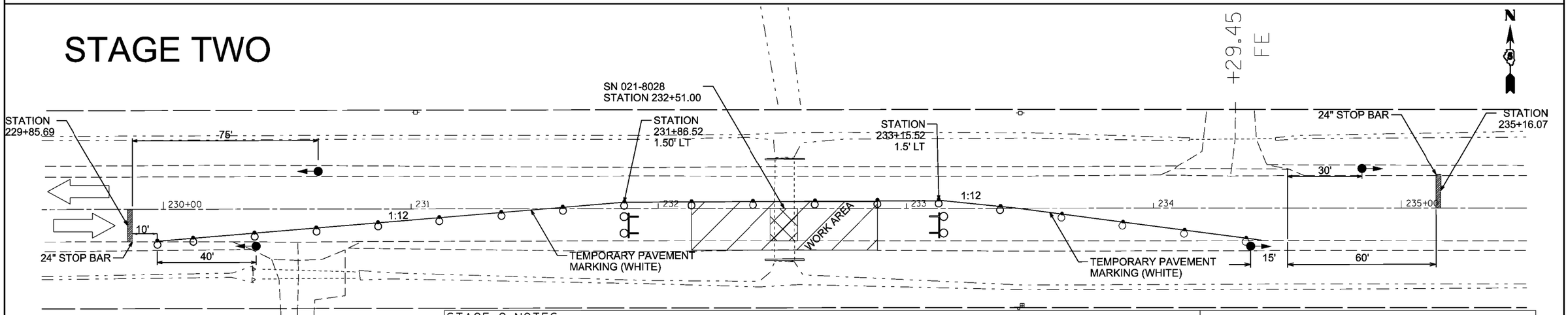

STAGE 2 NOTES

1. RELOCATE SIGNS, TRAFFIC SIGNALS, TEMPORARY BARRIERS, ETC. ACCORDING TO TRAFFIC CONTROL STANDARD 701316 AND AS SHOWN ON THIS PLAN.
2. PLACE TEMPORARY PAVEMENT MARKING LINE TO ALLOW FOR A 10'-0" TRAFFIC LANE. REMOVE ANY CONFLICTING STRIPING.
3. REMOVE THE STAGE II PORTION OF THE EXISTING PAVEMENT.
4. CONSTRUCT THE STAGE II PORTION OF THE NEW CONCRETE SLAB.
5. REMOVE TEMPORARY BARRIERS, SIGNALS, WORK ZONE PAVEMENT MARKING, AND SIGNS ASSOCIATED WITH TRAFFIC CONTROL STANDARD 701316.

GENERAL NOTES FOR STAGE CONSTRUCTION:

1. ALL SIGNS, TRAFFIC CONTROL EQUIPMENT, AND TEMPORARY PAVEMENT MARKINGS SHALL BE IN ACCORDANCE WITH THE LATEST VERSION OF HIGHWAY STANDARD 701316 AND SHALL BE INCLUDED IN THE CONTRACT UNIT PRICE EACH FOR TRAFFIC CONTROL AND PROTECTION STANDARD 701316
2. ALL TEMPORARY BRIDGE TRAFFIC SIGNALS FOR CONSTRUCTION WILL BE MEASURED AS 1 (ONE) UNIT.
3. ALL PRIVATE ENTRANCES ARE TO REMAIN OPEN AT ALL TIMES.
4. ALL TRAFFIC CONTROL ITEMS NOT SHOWN ON STAGE I & II PLAN VIEW SHALL BE PER REQUIREMENTS OF TRAFFIC CONTROL AND PROTECTION STANDARD 701316.

FILE NAME = c:\pw_work\pwidot\jaymedf\d0318412\D570A11-sht-staging.dgn	USER NAME = jaymedf	DESIGNED -	REVISED -
		DRAWN - DFJ	REVISED -
	PLOT SCALE = 40:0.0000 ' / in.	CHECKED -	REVISED -
$MODELNAME$	PLOT DATE = 1/28/2013	DATE - 01/18/13	REVISED -

STATE OF ILLINOIS
DEPARTMENT OF TRANSPORTATION

STAGE I & II TRAFFIC CONTROL
SN 021-8028 (LOCATION #1)

SCALE: | SHEET 01 OF 01 SHEETS | STA. | TO STA.

F.A.P. RTE.	SECTION	COUNTY	TOTAL SHEETS	SHEET NO.
749	**	DOUGLAS	17	11
** POSTING MITIGATION FY2013-1		CONTRACT NO. 70A11		
		ILLINOIS FED. AID PROJECT		

STAGE ONE

GENERAL NOTES FOR STAGE CONSTRUCTION:

1. ALL SIGNS, TRAFFIC CONTROL EQUIPMENT, AND TEMPORARY PAVEMENT MARKINGS SHALL BE IN ACCORDANCE WITH THE LATEST VERSION OF HIGHWAY STANDARD 701316 AND SHALL BE INCLUDED IN THE CONTRACT UNIT PRICE EACH FOR TRAFFIC CONTROL AND PROTECTION STANDARD 701316
2. ALL TEMPORARY BRIDGE TRAFFIC SIGNALS FOR CONSTRUCTION WILL BE MEASURED AS 1 (ONE) UNIT.
3. PLACE RCA IN ADVANCE OF SIGNALS AS DIRECTED BY ENGINEER.
4. ENTRANCE TO E 3785 NORTH ROAD IS TO REMAIN OPEN AT ALL TIMES.
5. EXISTING STOP SIGN AT ENTRANCE TO E 3785 NORTH ROAD IS TO BE COVERED
6. AN RCA WITH SIGNALS AND A SIGNAL AHEAD SIGN ARE TO BE PLACED ON E 3785 AS DIRECTED BY THE ENGINEER.
7. ALL PRIVATE ENTRANCES ARE TO REMAIN OPEN AT ALL TIMES.
8. ALL TRAFFIC CONTROL ITEMS NOT SHOWN ON STAGE I & II PLAN VIEW SHALL BE PER REQUIREMENTS OF TRAFFIC CONTROL AND PROTECTION STANDARD 701316.

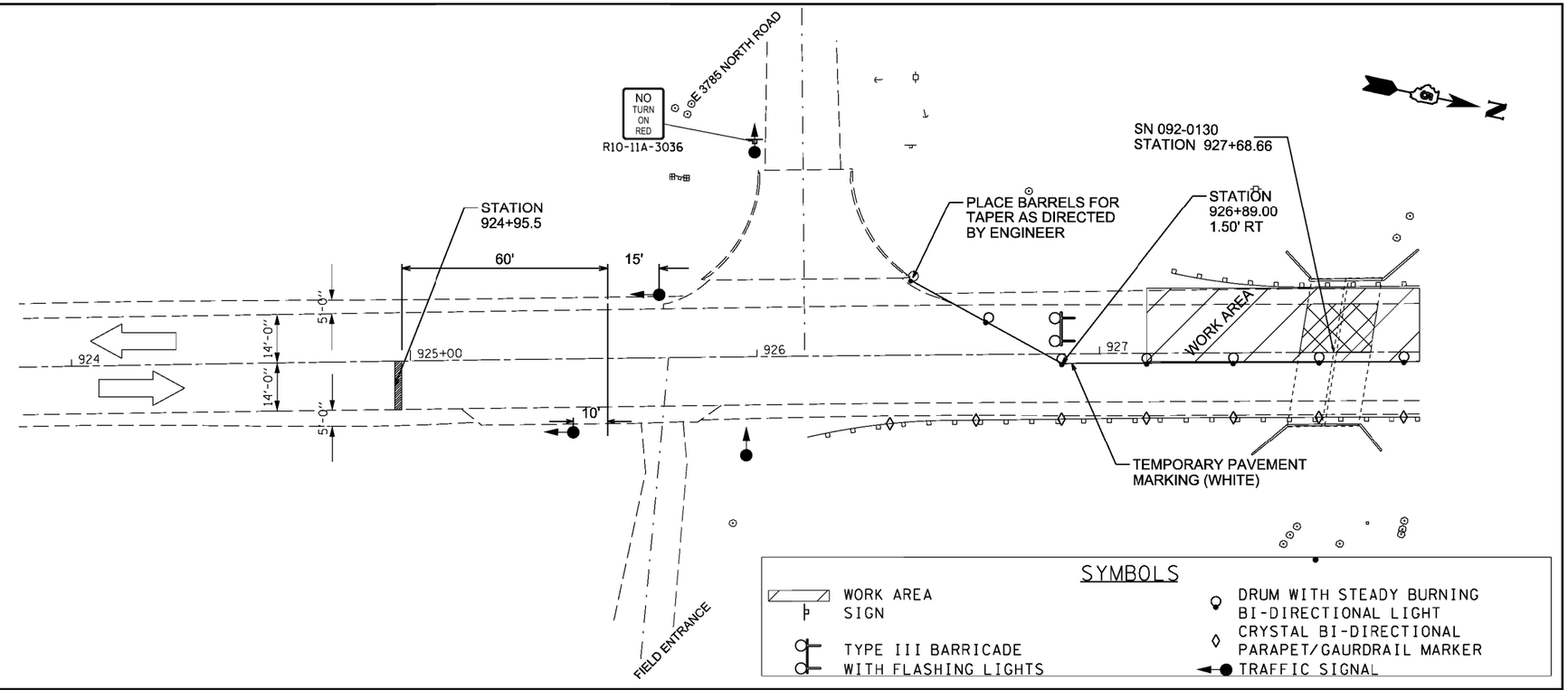

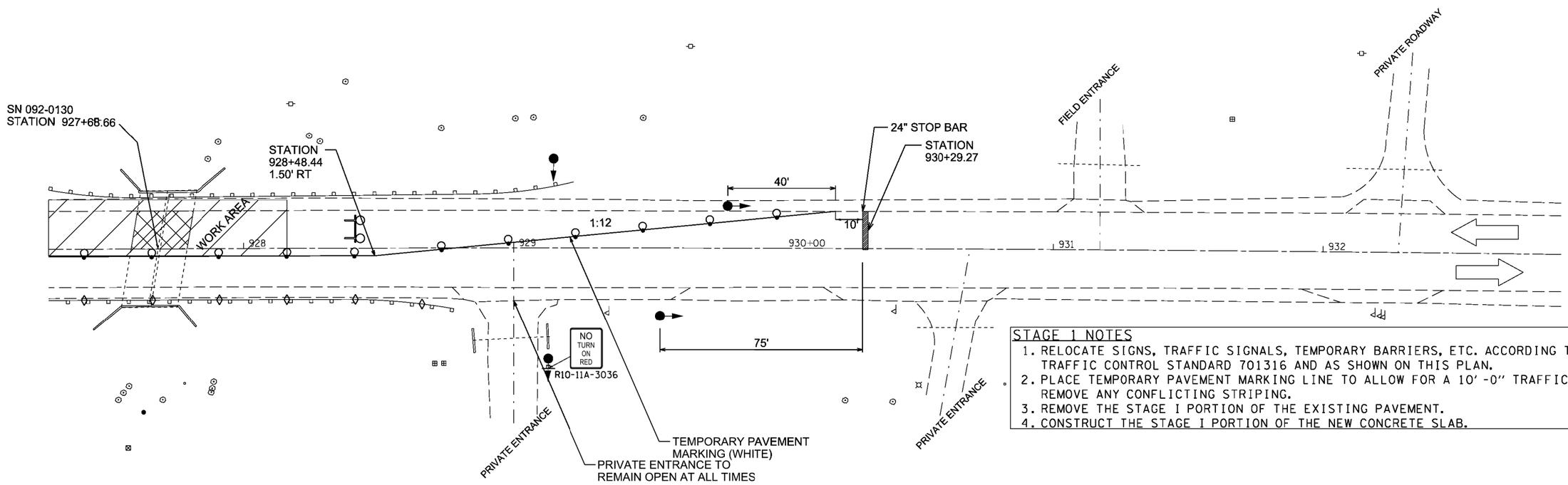

STAGE 1 NOTES

1. RELOCATE SIGNS, TRAFFIC SIGNALS, TEMPORARY BARRIERS, ETC. ACCORDING TO TRAFFIC CONTROL STANDARD 701316 AND AS SHOWN ON THIS PLAN.
2. PLACE TEMPORARY PAVEMENT MARKING LINE TO ALLOW FOR A 10'-0" TRAFFIC LANE. REMOVE ANY CONFLICTING STRIPING.
3. REMOVE THE STAGE I PORTION OF THE EXISTING PAVEMENT.
4. CONSTRUCT THE STAGE I PORTION OF THE NEW CONCRETE SLAB.

FILE NAME = c:\pw_work\pwidot\jaymedf\d0318412\D570A11-sht-staging.dgn	USER NAME = jaymedf	DESIGNED -	REVISED -
		DRAWN - DFJ	REVISED -
	PLOT SCALE = 40:0.0000 '/' / in.	CHECKED -	REVISED -
$MODELNAME$	PLOT DATE = 1/28/2013	DATE - 1/18/13	REVISED -

STATE OF ILLINOIS
DEPARTMENT OF TRANSPORTATION

STAGE I TRAFFIC CONTROL
SN 092-0130 (LOCATION #2)

SCALE: | SHEET 01 OF 02 SHEETS | STA. TO STA.

F.A.P. RTE.	SECTION	COUNTY	TOTAL SHEETS	SHEET NO.
322	**	VERMILION	17	12
** POSTING MITIGATION FY2013-1		CONTRACT NO. 70A11		
		ILLINOIS FED. AID PROJECT		

STAGE TWO

GENERAL NOTES FOR STAGE CONSTRUCTION:

1. ALL SIGNS, TRAFFIC CONTROL EQUIPMENT, AND TEMPORARY PAVEMENT MARKINGS SHALL BE IN ACCORDANCE WITH THE LATEST VERSION OF HIGHWAY STANDARD 701316 AND SHALL BE INCLUDED IN THE CONTRACT UNIT PRICE EACH FOR TRAFFIC CONTROL AND PROTECTION STANDARD 701316
2. ALL TEMPORARY BRIDGE TRAFFIC SIGNALS FOR CONSTRUCTION WILL BE MEASURED AS 1 (ONE) UNIT.
3. PLACE RCA IN ADVANCE OF SIGNALS AS DIRECTED BY ENGINEER.
4. ENTRANCE TO E 3785 NORTH ROAD IS TO REMAIN OPEN AT ALL TIMES.
5. EXISTING STOP SIGN AT ENTRANCE TO E 3785 NORTH ROAD IS TO BE COVERED
6. AN RCA WITH SIGNALS AND A SIGNAL AHEAD SIGN ARE TO BE PLACED ON E 3785 AS DIRECTED BY THE ENGINEER.
7. ALL PRIVATE ENTRANCES ARE TO REMAIN OPEN AT ALL TIMES.
8. ALL TRAFFIC CONTROL ITEMS NOT SHOWN ON STAGE I & II PLAN VIEW SHALL BE PER REQUIREMENTS OF TRAFFIC CONTROL AND PROTECTION STANDARD 701316.

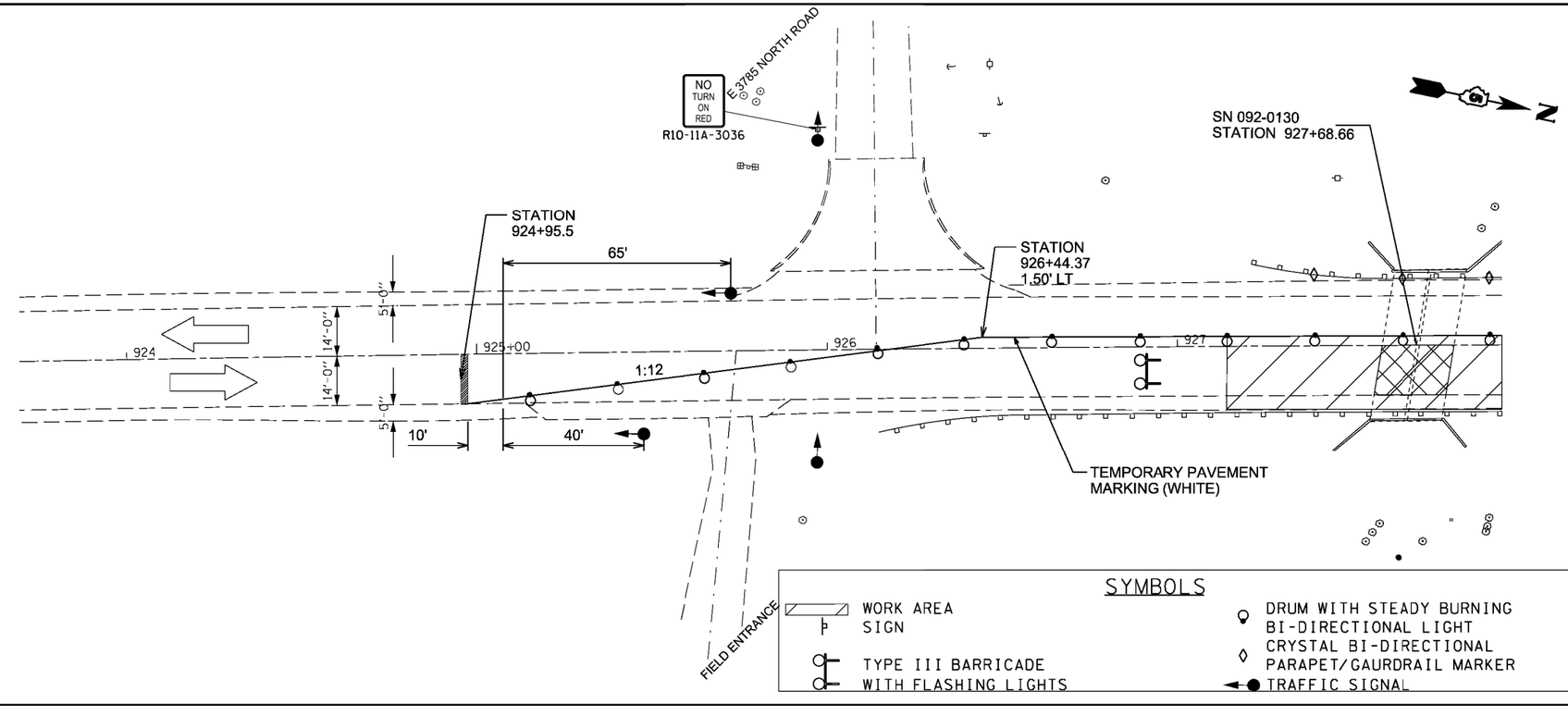

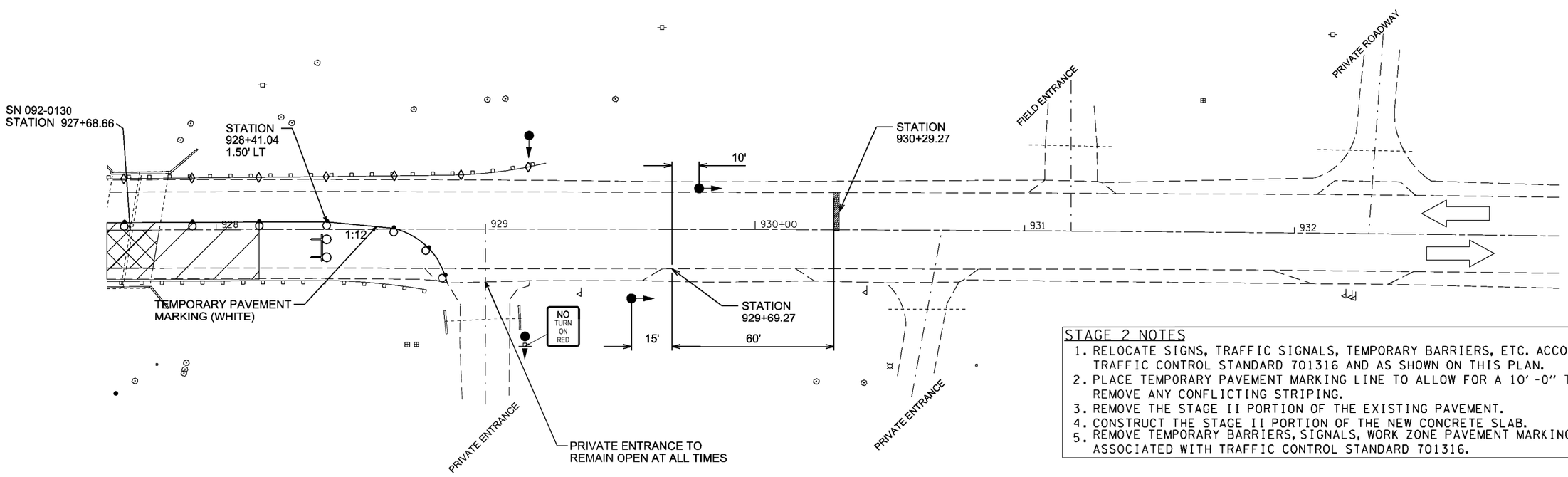

STAGE 2 NOTES

1. RELOCATE SIGNS, TRAFFIC SIGNALS, TEMPORARY BARRIERS, ETC. ACCORDING TO TRAFFIC CONTROL STANDARD 701316 AND AS SHOWN ON THIS PLAN.
2. PLACE TEMPORARY PAVEMENT MARKING LINE TO ALLOW FOR A 10'-0" TRAFFIC LANE. REMOVE ANY CONFLICTING STRIPING.
3. REMOVE THE STAGE II PORTION OF THE EXISTING PAVEMENT.
4. CONSTRUCT THE STAGE II PORTION OF THE NEW CONCRETE SLAB.
5. REMOVE TEMPORARY BARRIERS, SIGNALS, WORK ZONE PAVEMENT MARKING, AND SIGNS ASSOCIATED WITH TRAFFIC CONTROL STANDARD 701316.

FILE NAME = c:\pw_work\pwidot\jaymedf\d0318412\D570411-sht-staging.dgn	USER NAME = jaymedf	DESIGNED -	REVISED -	STATE OF ILLINOIS DEPARTMENT OF TRANSPORTATION	STAGE II TRAFFIC CONTROL SN 092-0130 (LOCATION #2)	F.A. RTE. 332	SECTION **	COUNTY VERMILION	TOTAL SHEETS 17 / SHEET NO. 13
	PLOT SCALE = 40:0.0000 '/' / in.	DRAWN - DFJ	REVISED -			** POSTING MITIGATION FY2013-1		CONTRACT NO. 70A11	
$MODELNAME$	PLOT DATE = 1/28/2013	CHECKED -	REVISED -		SCALE:	SHEET 02 OF 02 SHEETS	STA. TO STA.	ILLINOIS FED. AID PROJECT	
		DATE - 1/18/13	REVISED -						

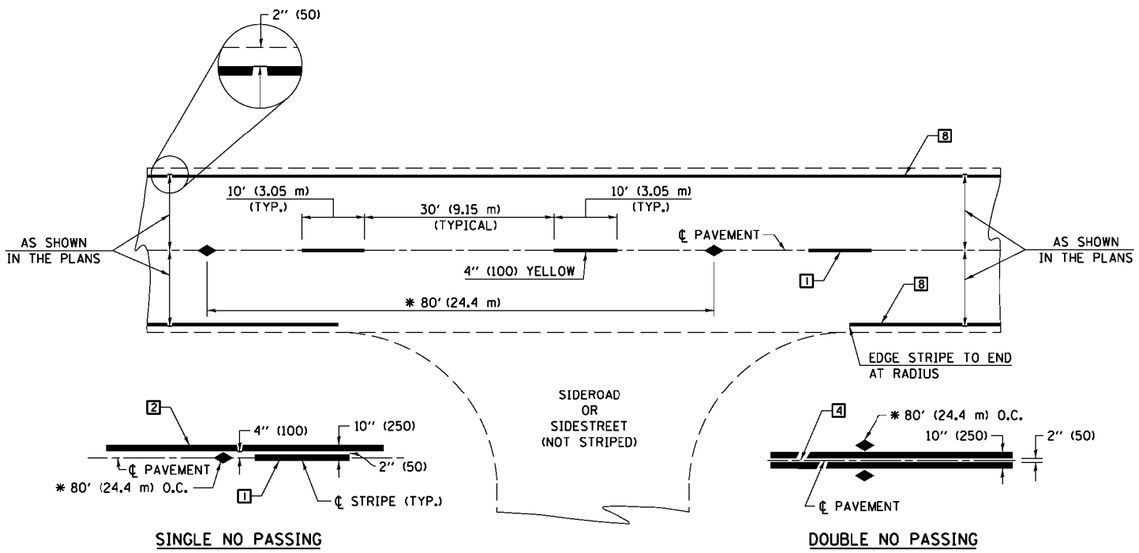

SINGLE NO PASSING

DOUBLE NO PASSING

* REDUCE TO 40' (12.2 m) O.C. ON CURVES WITH POSTED OR ADVISORY SPEEDS OF 45 mph (70 km/h) OR LESS.

TWO LANE/TWO WAY

TYPICAL PAVEMENT MARKING LEGEND

1. 4" (100) SKIP-DASH (YELLOW)
2. 4" (100) SOLID (YELLOW)
3. 12" (300) DIAGONAL (YELLOW)
4. 4" (100) DOUBLE YELLOW (NARROW)
5. RESERVED
6. RESERVED
7. 4" (100) SKIP-DASH (WHITE)
8. 4" (100) SOLID (WHITE)
9. 12" (300) DIAGONAL (WHITE)
10. 6" (150) SOLID (WHITE)
11. 24" (600) STOP BAR (WHITE)
12. 8" (200) SOLID (WHITE)
13. 4" (100) LANE LINE EXTENSIONS (WHITE)
14. 4" (100) PARKING WHITE

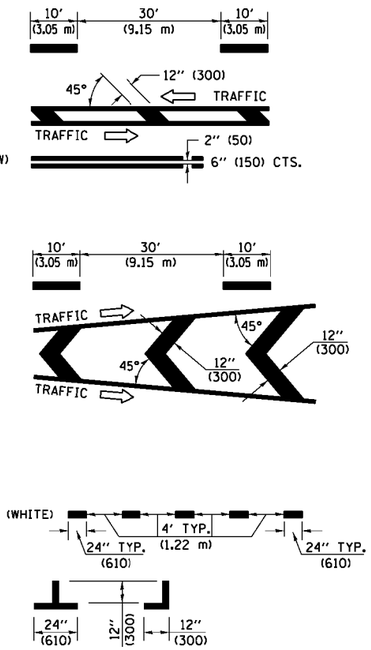

TYPICAL PAVEMENT MARKERS LEGEND

- TWO-WAY AMBER MARKER
- ONE-WAY AMBER MARKER
- ONE-WAY CRYSTAL MARKER

RURAL LEFT TURN

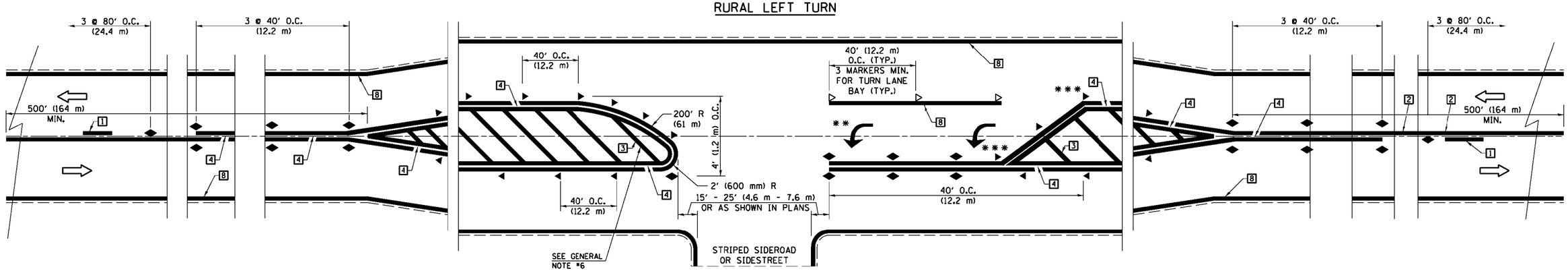

*** REDUCE SPACING IF NECESSARY TO ASSURE MARKERS AT CORNER POINTS.

** TURN ARROWS SHALL BE PLACED AS SHOWN ON SHEET #2.

Note: All dimensions are in INCHES (millimeters) unless otherwise shown.

* ROUTES FAP 749 (IL 133) & FAP 332 (IL 1)
** POSTING MITIGATION FY2013-1
*** DOUGLAS /VERMILION

DISTRICT 5 DETAIL NO. 7800AAAA

FILE NAME = c:\pw_work\pwidot\jaymedf\d0318412\D570411-sht-details.dgn	USER NAME = jaymedf	DESIGNED -	REVISED - 11/06	STATE OF ILLINOIS DEPARTMENT OF TRANSPORTATION
		DRAWN -	REVISED - 09/2009 - KJT	
	PLOT SCALE = 40:0.0000 ':' / in.	CHECKED -	REVISED -	
	PLOT DATE = 1/22/2013	DATE -	REVISED -	

PAVEMENT MARKING AND MARKERS (RURAL & URBAN APPLICATIONS)

SCALE: | SHEET NO. 1 OF 4 SHEETS | STA. | TO STA.

F.A. RTE.	SECTION	COUNTY	TOTAL SHEETS	SHEET NO.
*	**	***	17	14
		CONTRACT NO. 70A11		
FED. ROAD DIST. NO.	ILLINOIS	FED. AID PROJECT		

URBAN LEFT TURN

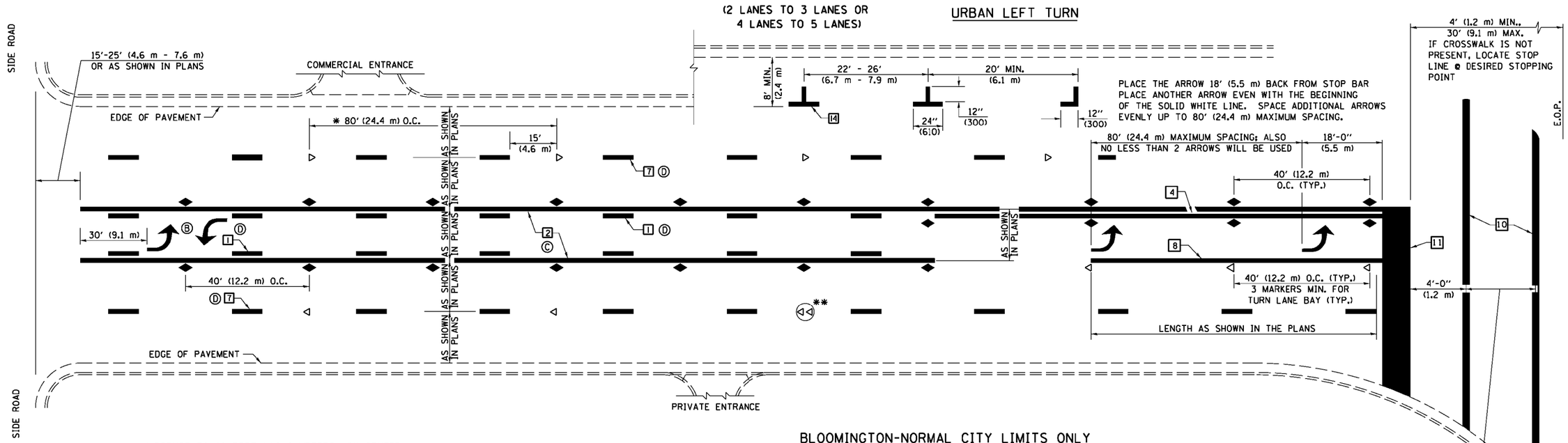

BLOOMINGTON-NORMAL CITY LIMITS ONLY

CROSSWALK WIDTH 6'-0" (1.8 m)
OR AS SHOWN IN THE PLANS

* REDUCE TO 40 FEET (12.2 METERS) ON CENTER ON CURVES WHERE ADVISORY SPEEDS ARE 10 MPH (15 km/h) LOWER THAN POSTED SPEEDS.

** DOUBLE LANE LINE MARKERS SHALL BE SPECIFIED AND SPACED AS SHOWN IN HIGHWAY STANDARD 781001 FOR MULTI-LANE DIVIDED AND UNDIVIDED HIGHWAYS.

GENERAL NOTES:

Ⓑ TURN ARROW PAIRS SHALL BE PLACED AT 250' (75 m) INTERVALS AND SHALL BE EVENLY SPACED BETWEEN BOTH ENDS OF THE BIDIRECTIONAL LEFT TURN LANE.

Ⓒ THE SOLID YELLOW PAVEMENT MARKINGS [2] SHOULD GENERALLY START OR END NEAR THE RADIUS POINT OF EACH STREET RETURN EXCEPT WHERE ONE OR BOTH ENDS WOULD INCLUDE STOP BARS.

Ⓓ THE SKIP-DASH PAVEMENT MARKINGS [1] OR [7] SHOULD BE CENTERED BETWEEN BOTH ENDS OF EACH CITY BLOCK AND SHALL BE PLACED SO THEY LINE UP ACROSS FROM EACH OTHER. SEE EXAMPLE ON SHEET 2 OF 3.

Ⓔ USE LARGE ARROW SIZE FOR BOTH RURAL AND URBAN LOCATIONS. (SEE LAST PAGE OF SECTION 780x FOR SYMBOLS TABLE)

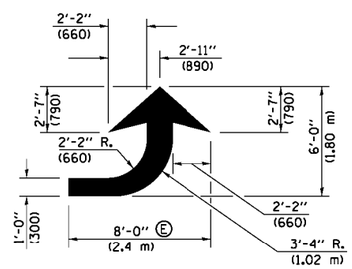

LEFT ARROW

REVERSE FOR RIGHT ARROW
AREA = 15.6 SQ. FT. (1.47 m^2)
(WHITE)

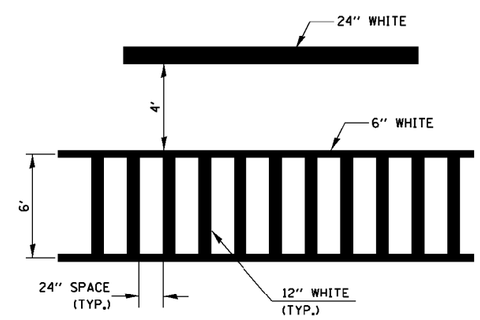

TYPICAL SPACING FOR CROSSWALKS & STOP BARS

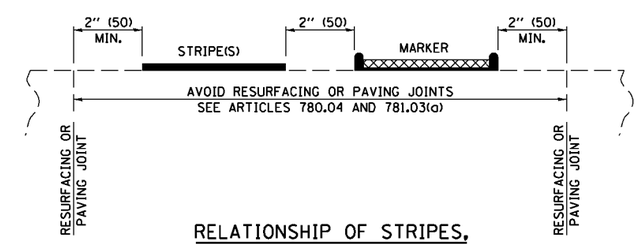

RELATIONSHIP OF STRIPES, MARKERS AND JOINTS

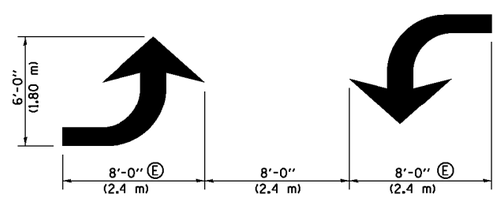

TYPICAL DOUBLE TURN ARROWS (WHITE)

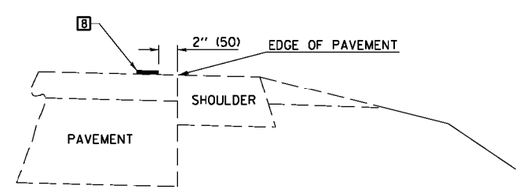

RELATIONSHIP OF EDGE LINE TO EDGE OF PAVEMENT

(SAFETY SHOULDER OR PAVED SURFACE)
SEE ARTICLE 780.04

Note: All dimensions are in INCHES (millimeters) unless otherwise shown.

* ROUTES FAP 749 (IL 133) & FAP 332 (IL 1)
** POSTING MITIGATION FY2013-1
*** DOUGLAS /VERMILION

DISTRICT 5 DETAIL NO. 7800AAAA

FILE NAME = c:\pw_work\pwidot\jaymedf\d0318412\D570A11-sht-details.dgn	USER NAME = jaymedf	DESIGNED -	REVISED - 11/06	STATE OF ILLINOIS DEPARTMENT OF TRANSPORTATION
		DRAWN -	REVISED - 09/2009 - KJT	
	PLOT SCALE = 40:0.0000 ':' / in.	CHECKED -	REVISED -	
	PLOT DATE = 1/22/2013	DATE -	REVISED -	

PAVEMENT MARKING AND MARKERS (RURAL & URBAN APPLICATIONS)

SCALE: | SHEET NO. 2 OF 4 SHEETS | STA. TO STA.

F.A. RTE.	SECTION	COUNTY	TOTAL SHEETS	SHEET NO.
*	**	***	17	15

CONTRACT NO. 70A11

FED. ROAD DIST. NO. | ILLINOIS | FED. AID PROJECT

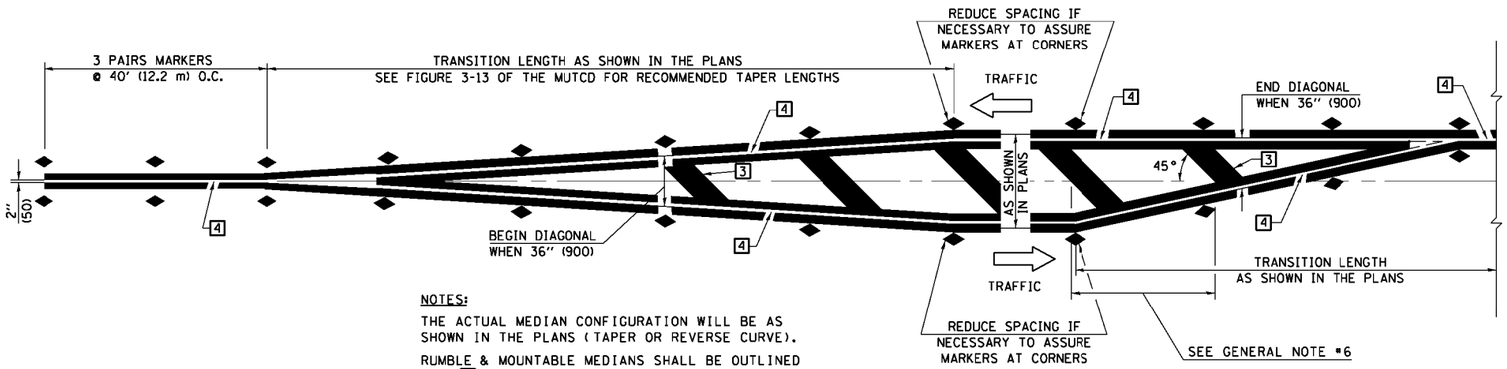

NOTES:

THE ACTUAL MEDIAN CONFIGURATION WILL BE AS SHOWN IN THE PLANS (TAPER OR REVERSE CURVE).

RUMBLE & MOUNTABLE MEDIANS SHALL BE OUTLINED WITH [2].

TYPICAL MEDIAN TRANSITIONS

GENERAL NOTES

1. WHEN MEDIANS ARE PRESENT, PAVEMENT MARKINGS ARE TO BE PLACED ADJACENT TO MEDIANS.
2. SOME OF THE INFORMATION INCLUDED WITH THIS DETAIL MAY NOT BE APPLICABLE TO THIS IMPROVEMENT.
3. PAVEMENT MARKINGS ARE TO BE EXTENDED THROUGH OMISSIONS WHEN APPLICABLE.
4. A STRIPING KEY IS AVAILABLE ELSEWHERE AND SHALL BE SHOWN WHERE THE QUANTITIES ARE LISTED.
5. FINAL PAVEMENT MARKINGS SHALL BE IN PLACE PRIOR TO PLACING ANY RAISED REFLECTIVE PAVEMENT MARKERS.
6. THE FOLLOWING CRITERIA SHALL BE USED FOR SELECTING THE DIAGONAL PAVEMENT MARKING SPACING.
   <30 MPH USE 15' (<50 km/h USE 4.5 m)
   30-45 MPH USE 20' (50-75 km/h USE 6.0 m)
   >45 MPH USE 30' (>75 km/h USE 9.0 m)

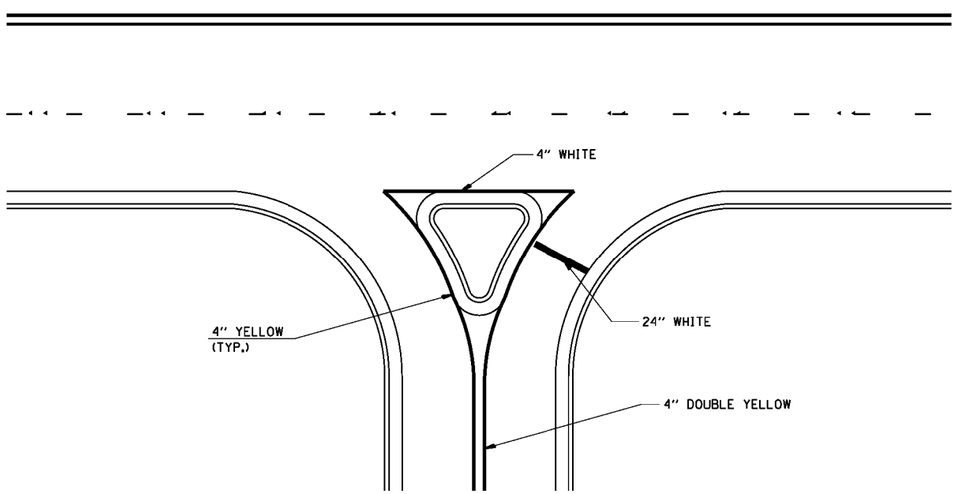

RIGHT IN - RIGHT OUT ACCESS

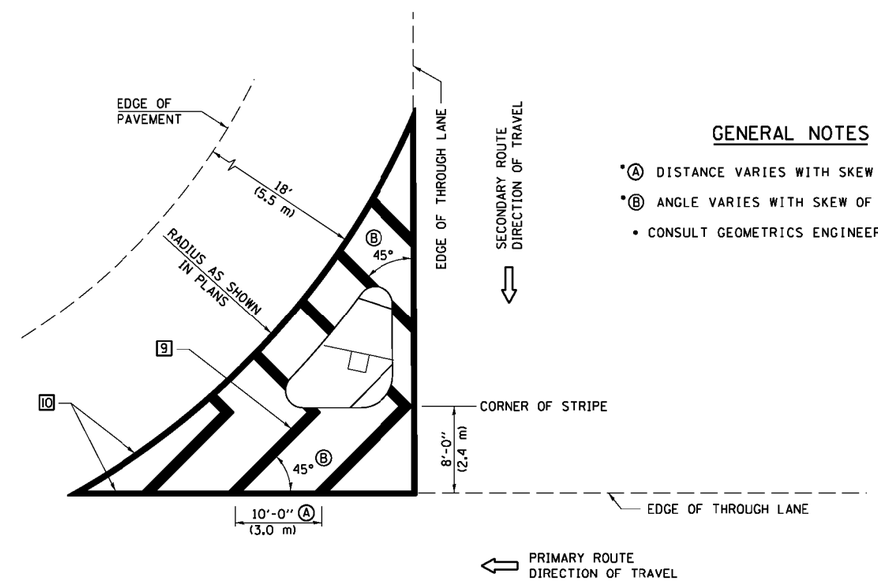

ISLAND

GENERAL NOTES

*A DISTANCE VARIES WITH SKEW OF INTERSECTION.

*B ANGLE VARIES WITH SKEW OF INTERSECTION.

• CONSULT GEOMETRICS ENGINEER

Note: All dimensions are in INCHES (millimeters) unless otherwise shown.

* ROUTES FAP 749 (IL 133) & FAP 332 (IL 1)
** POSTING MITIGATION FY2013-1
*** DOUGLAS /VERMILION

DISTRICT 5 DETAIL NO. 7800AAAA

FILE NAME = c:\pw_work\pwidot\jaymedf\d0318412\D570A11-sht-details.dgn	USER NAME = jaymedf	DESIGNED -	REVISED - 11/06	STATE OF ILLINOIS DEPARTMENT OF TRANSPORTATION
		DRAWN -	REVISED - 09/2009 - KJT	
	PLOT SCALE = 40:0.0000 ':' / in.	CHECKED -	REVISED -	
	PLOT DATE = 1/22/2013	DATE -	REVISED -	

PAVEMENT MARKING AND MARKERS (RURAL & URBAN APPLICATIONS)

SCALE: | SHEET NO. 3 OF 4 SHEETS | STA. TO STA.

F.A. RTE.	SECTION	COUNTY	TOTAL SHEETS	SHEET NO.
*	**	***	17	16

CONTRACT NO. 70A11

FED. ROAD DIST. NO. | ILLINOIS | FED. AID PROJECT

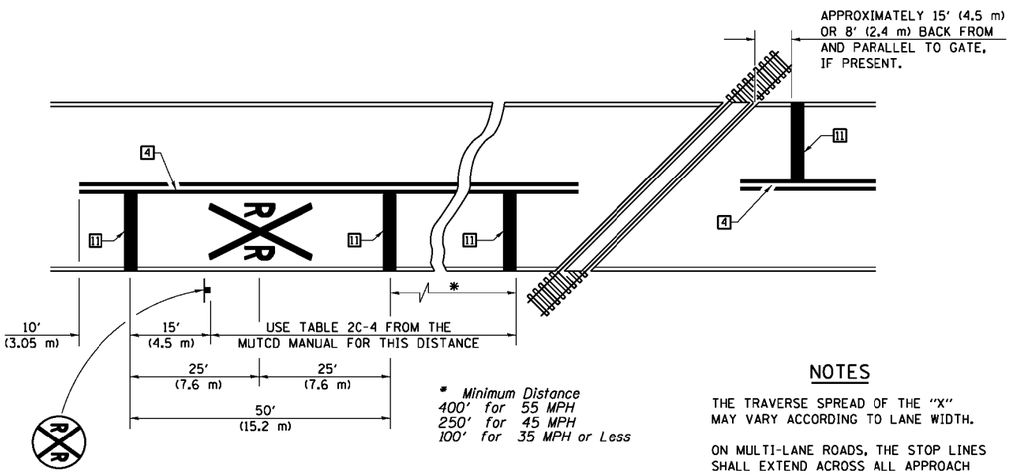

PAVEMENT MARKINGS AT RAILROAD-HIGHWAY GRADE CROSSING

NOTES

THE TRAVERSE SPREAD OF THE "X" MAY VARY ACCORDING TO LANE WIDTH.

ON MULTI-LANE ROADS, THE STOP LINES SHALL EXTEND ACROSS ALL APPROACH LANES AND SEPARATE RXR SYMBOLS SHALL BE PLACED ADJACENT TO EACH OTHER IN EACH LANE.

WHEN THE PAVEMENT MARKING SYMBOL IS USED, A PORTION OF THE SYMBOL SHOULD BE LOCATED DIRECTLY ADJACENT TO THE ADVANCE WARNING SIGN (W10-1) AS PLACED BY TABLE II-1, CONDITION B OF THE MUTCD.

RAILROAD CROSSING WITH INTERCONNECT ONLY

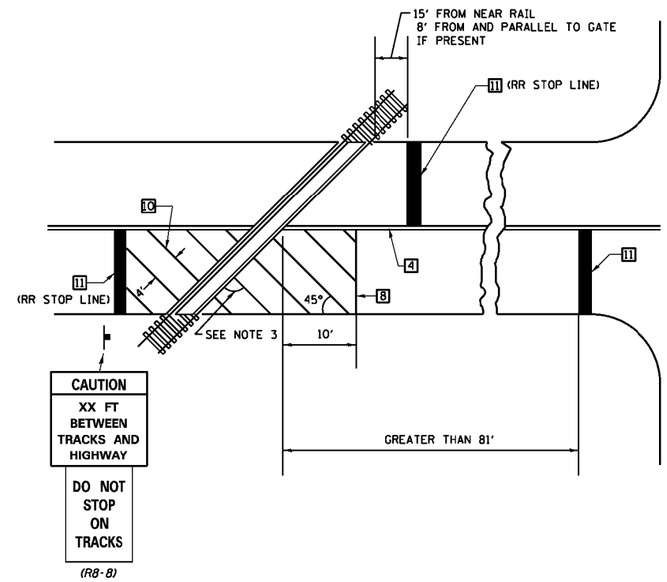

RAILROAD CROSSING WITH INTERCONNECT AND PRE-SIGNALS

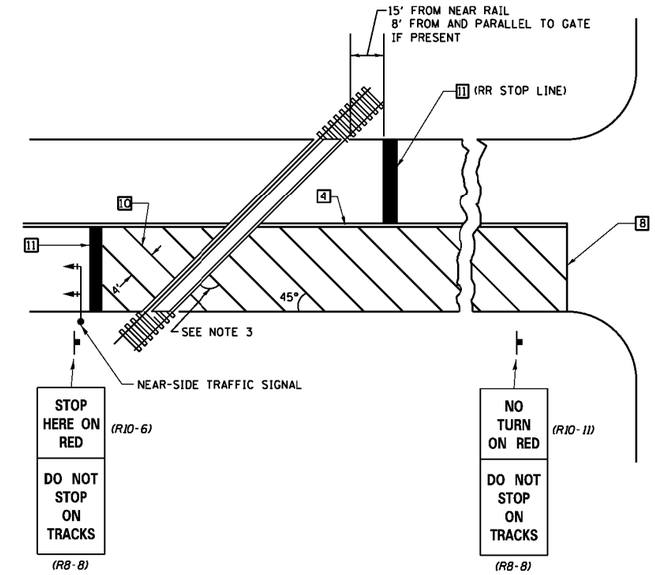

SUPPLEMENTAL PAVEMENT MARKING TREATMENT FOR RAILROAD-HIGHWAY GRADE CROSSING

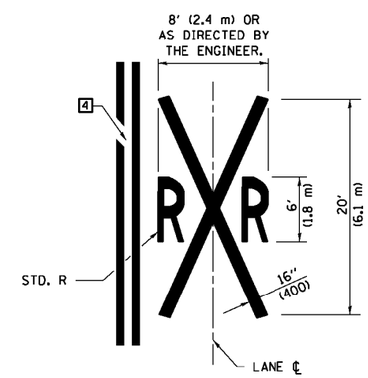

GENERAL NOTES

1. SUPPLEMENTAL PAVEMENT MARKINGS TO BE INSTALLED ONLY ON APPROACHES TO INTERSECTIONS CONTROLLED BY TRAFFIC SIGNALS WHICH ARE INTERCONNECTED WITH THE RAILROAD WARNING SIGNALS.
2. EXTEND PAVEMENT MARKINGS TO THE INTERSECTION ONLY WHERE NEAR-SIDE TRAFFIC SIGNALS ARE USED.
3. WHERE THE ANGLE BETWEEN THE DIAGONAL PAVEMENT MARKINGS AND THE TRACK WOULD BE LESS THAN 20°, THE PAVEMENT MARKINGS SHOULD BE PLACED IN THE OPPOSITE DIRECTION FROM THAT SHOWN.

Note: All dimensions are in INCHES (millimeters) unless otherwise shown.

* ROUTES FAP 749 (IL 133) & FAP 332 (IL 1)
** POSTING MITIGATION FY2013-1
*** DOUGLAS /VERMILION

DISTRICT 5 DETAIL NO. 7800AAAA

FILE NAME = c:\pw_work\pwidot\jaymedf\d0318412\D570A11-sht-details.dgn	USER NAME = jaymedf	DESIGNED -	REVISED - 11/06
		DRAWN -	REVISED - 09/2009 - KJT
	PLOT SCALE = 40:0.0000 ':' / in.	CHECKED -	REVISED -
	PLOT DATE = 1/22/2013	DATE -	REVISED -

STATE OF ILLINOIS
DEPARTMENT OF TRANSPORTATION

PAVEMENT MARKING AND MARKERS (RURAL & URBAN APPLICATIONS)

SCALE: | SHEET NO. 4 OF 4 SHEETS | STA. | TO STA.

F.A. RTE.	SECTION	COUNTY	TOTAL SHEETS	SHEET NO.
*	**	***	17	17

CONTRACT NO. 70A11

FED. ROAD DIST. NO. | ILLINOIS | FED. AID PROJECT