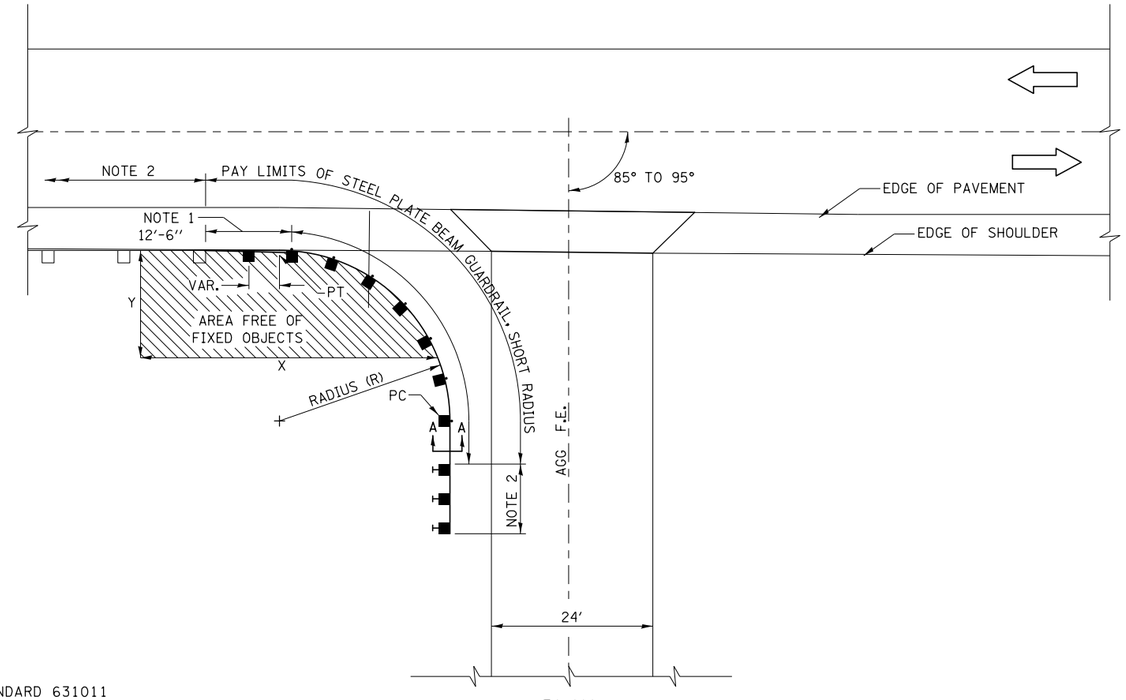

PLAN

CURVED GUARDRAIL DETAIL

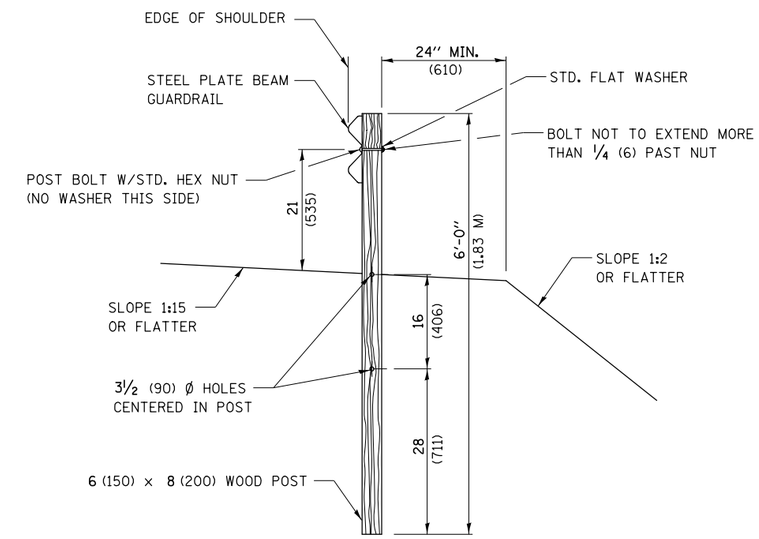

SECTION A-A

NOTES

1. CONSTRUCT ACCORDING TO STANDARD 631011 FOR TRAFFIC BARRIER TERMINAL TYPE 2, EXCEPT DELETE END SECTION AND SPLICE INTO RADIUS GUARDRAIL.
2. EXISTING STEEL PLATE BEAM GUARDRAIL TYPE A OR TRAFFIC BARRIER TERMINAL, TYPE 2.
3. FOR THE 8'-6" (2.59 M) RADIUS, THE RAIL IS NOT BOLTED TO THE POST LOCATED AT THE MIDPOINT OF THE CURVE.

GENERAL NOTES

ALL SLOPE RATIOS ARE EXPRESSED AS UNITS OF VERTICAL DISPLACEMENT TO UNITS OF HORIZONTAL DISPLACMENT (V:H).

ALL DIMENSIONS ARE IN INCHES (MILLIMETERS) UNLESS OTHERWISE SHOWN.

INSTALLATION CHARACTERISTICS PER DESIGN RADIUS (R)			
R	NO. OF WOOD POSTS	X	Y
8'-6" (2.59)	5 (NOTE 3)	25' (7.6 m)	15' (4.6)
17'-0" (5.18)	6	30' (9.1 m)	15' (4.6)
25'-6" (7.77)	8	40' (12.2 m)	20' (6.1)
35'-0" (10.67)	11	50' (15.2 m)	20' (6.1)