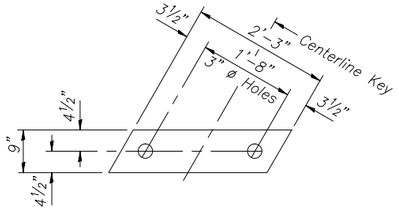

FABRIC BEARING PAD
(Interior)

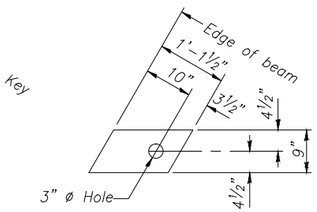

FABRIC BEARING PAD
(Exterior)

FIXED

Notes:
All bearing pads shall be 1" thick.
Omit holes when using expansion bearings.
Expansion bearing pad shall be bonded to the substructure.

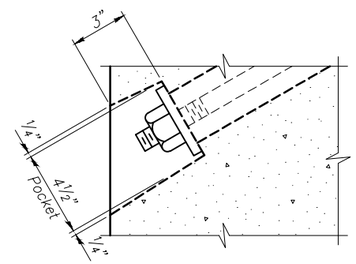

SECTION A–A

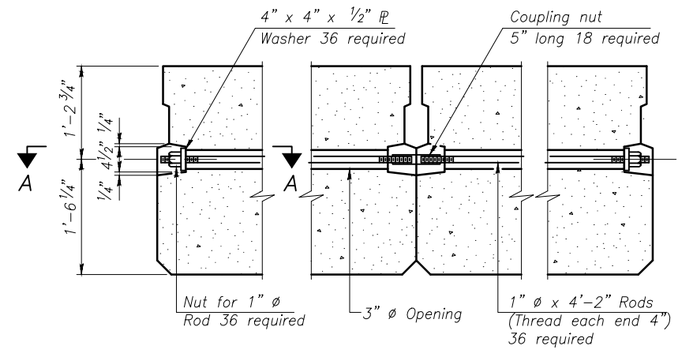

TYPICAL TRANSVERSE TIE ASSEMBLY

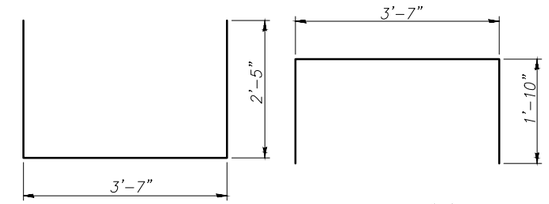

BAR S(E)

BAR S1(E)

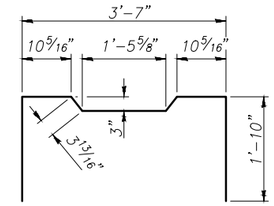

BAR S2(E)

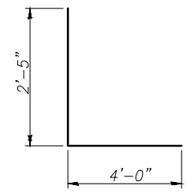

BAR S3(E)

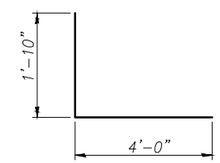

BAR S4(E)

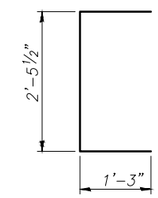

BAR U(E)

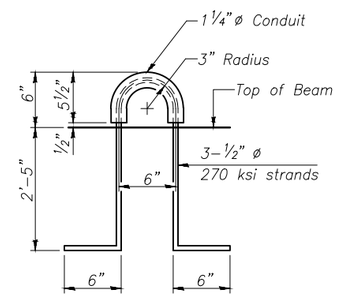

LIFTING LOOP DETAIL

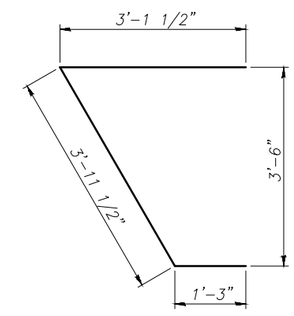

BAR U1(E)

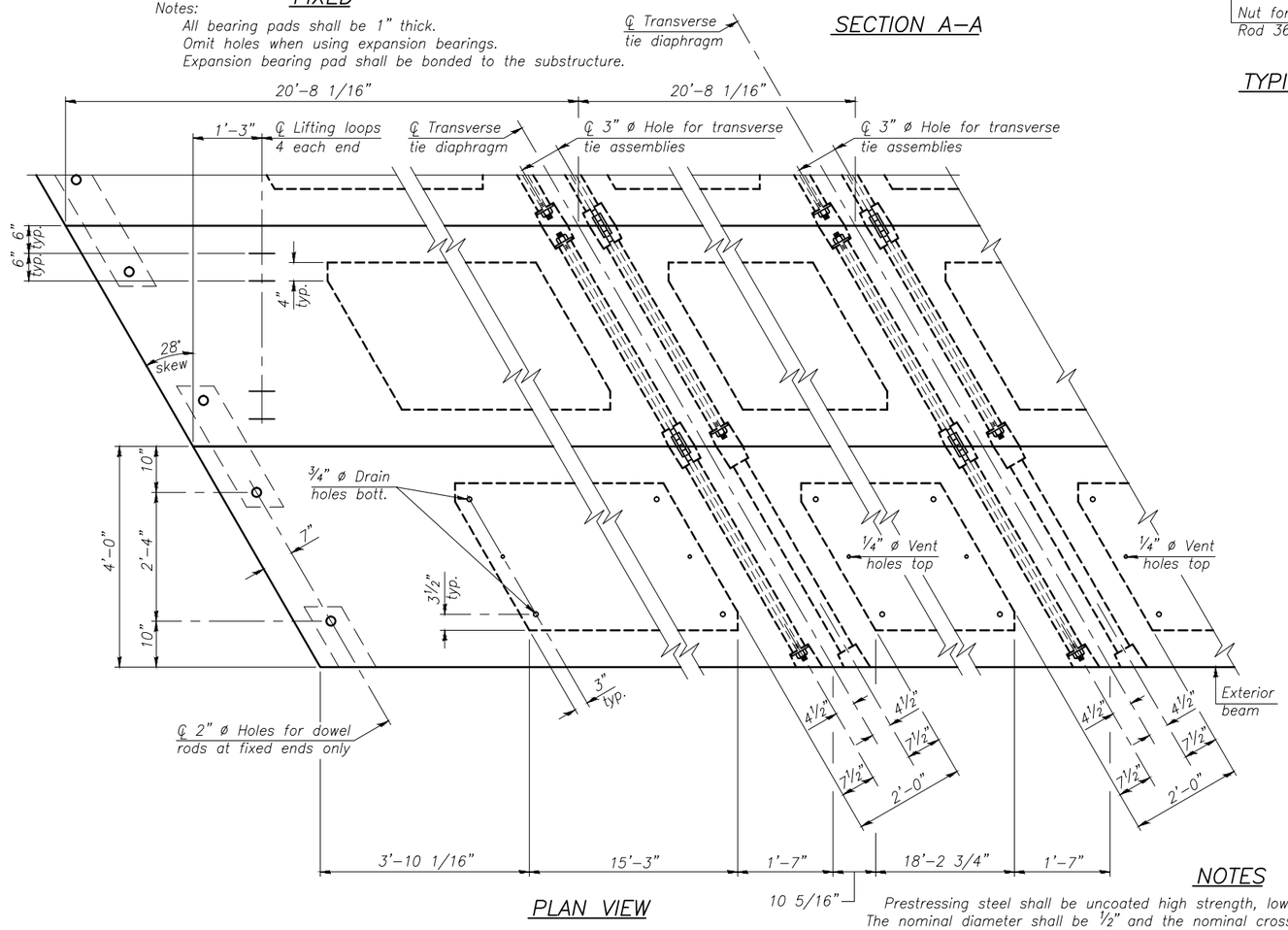

PLAN VIEW

Note: Connect beams in pairs with the transverse tie configuration shown.

NOTES

Prestressing steel shall be uncoated high strength, low relaxation 7-wire strand, Grade 270. The nominal diameter shall be ½" and the nominal cross-sectional area shall be 0.153 sq. in.

The 1" ø rods in the transverse tie assembly shall be tightened to a snug fit and the threads set. Pockets on exterior faces of bridge shall be filled with grout after transverse tie assembly is in place.

Reinforcement bars shall conform to ASTM A 706, Grade 60.

Two ⅛" fabric adjusting shims of the dimensions of the exterior bearing pad shall be provided for each bearing pad location.

A minimum 2 ½" ø lifting pin shall be used to engage the lifting loops during handling.

Corrosion Inhibitor, per Article 1020.05(b)(12) and 1021.06 of the Standard Specifications, shall be used in the concrete for precast prestressed concrete deck beams.

Compressive strength of prestressed concrete, f'c, shall be 6000 psi.

Compressive strength of prestressed concrete at release, f'ci, shall be 5000 psi.

BILL OF MATERIAL

Precast Prestressed Conc. Deck Bms. (33" depth)	Sq. Ft.	2315

PD-3348-RD 7-1-10

DRAWN BY: LAG
CHECKED BY: JKC
DATE: 12/12

REVISIONS			
LEVEL	BY	DATE	DESCRIPTION
1	MAB	3/8/13	REVISED PER IDA COMMENTS

CHAMLIN & ASSOCIATES

PERU MORRIS ILLINOIS

MORRIS AIRPORT ACCESS ROAD
CITY OF MORRIS, GRUNDY COUNTY, ILLINOIS

33" x 48" PPC DECK BEAM DETAILS
STRUCTURE NO. 032-7013
SHEET NO. 4 OF 10 SHEETS

APPROVED
FOR CONSTRUCTION

CURRENT AS OF: 3/8/13
SCALE: AS NOTED
FILE NO.: 1002.86
SHEET 25 OF 38

CHAMLIN & ASSOCIATES, INC. © 2012
Drawing Name: H:\ADB\1002-86\PERU BRIDGE PLANS\003-4-5-8-DETAILS.dwg Last Modified: Mar 08, 2013 - 2:19pm Plotted on: Mar 08, 2013 - 3:30pm by mark