STATE OF ILLINOIS
DEPARTMENT OF TRANSPORTATION

Various Routes
OVD SIN STR REP & REPL 2007-16
Various Counties
Sheet 19 of 51
Contract Number 44949

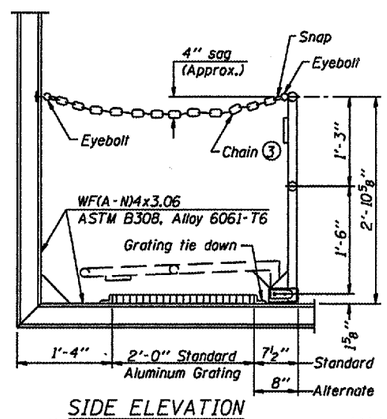

SIDE ELEVATION
(Showing safety chain w/o sign)

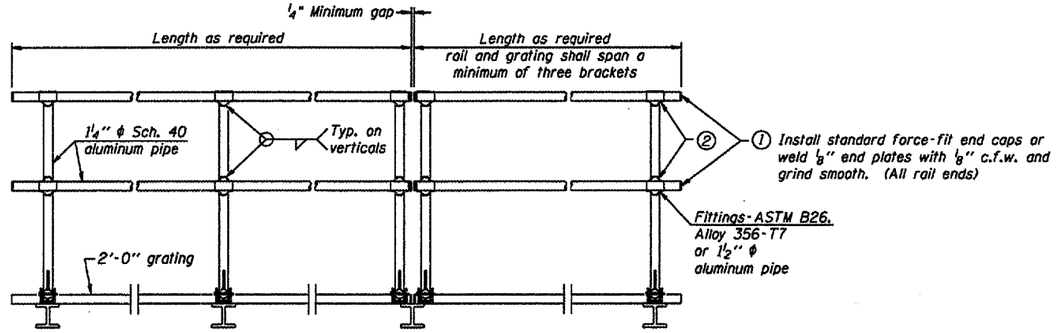

FRONT ELEVATION

② Horizontal handrail member shall be continuous thru fitting. Provide 7/16" ϕ hole in fitting for ⅜" ϕ bolt. Field drill 7/16" ϕ hole in horizontal rail member. Provide locknut and two stainless steel washers for bolt. (Use 5/16" eyebolts in 7/16" ϕ holes on top rail at ends only.)

HANDRAIL DETAILS

Handrail pipe shall be ASTM B241 or B429, Alloy 6063-T6 or Alloy 6061-T6.

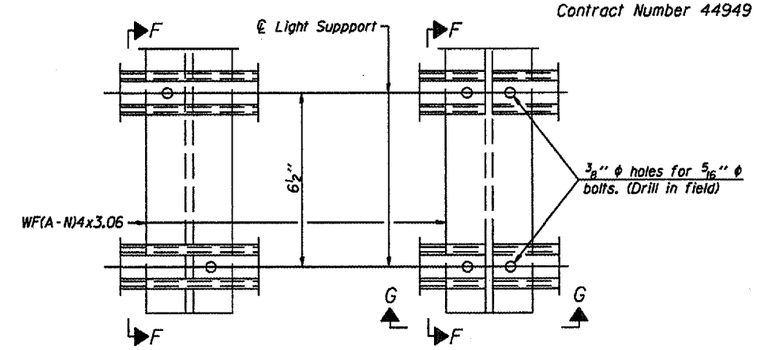

DETAIL F

DETAIL G

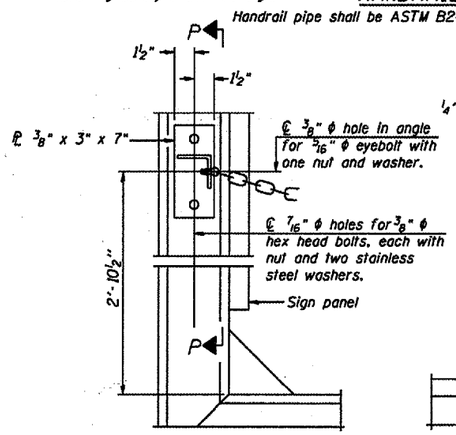

ALTERNATE SAFETY CHAIN ATTACHMENT
(With Sign Present)
Items not shown same as "Side Elevation" of "Handrail Details"

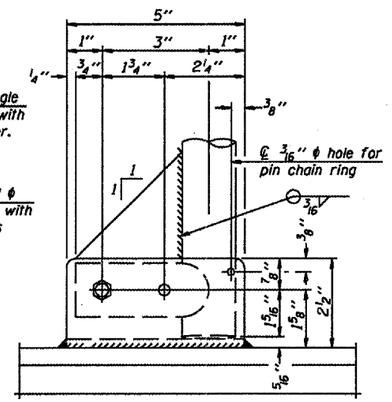

SIDE ELEVATION

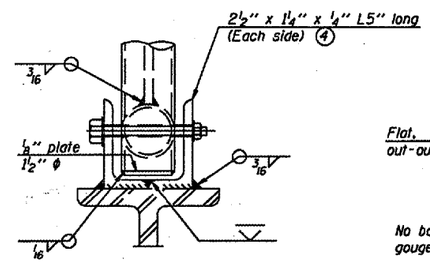

FRONT ELEVATION
See "Elevation" at right for dimensions.

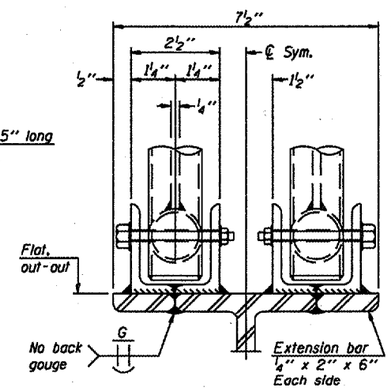

ELEVATION AT HANDRAIL JOINT ④

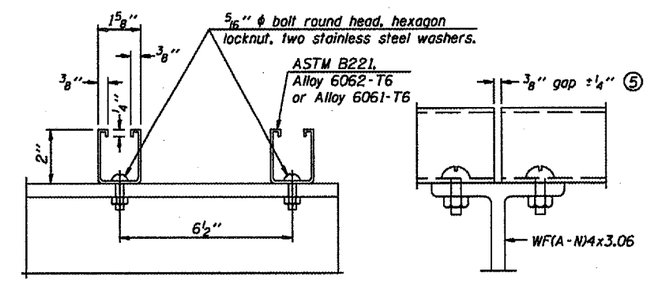

SECTION F-F

SECTION G-G

LIGHTING FIXTURE MOUNTS (IF REQUIRED)

⑤ Field cut ends of light support channels shall be free of burrs or hazardous projections and coated with zinc-rich primer or equivalent.

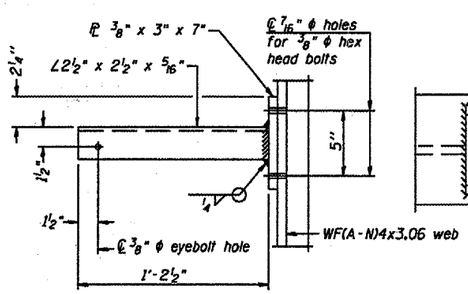

SECTION P-P

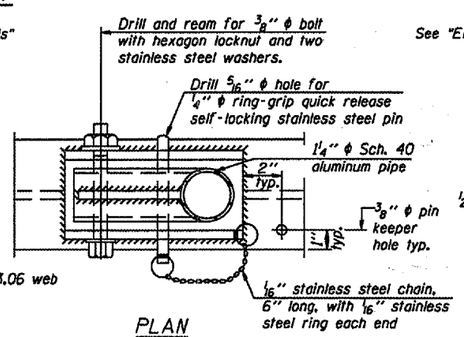

PLAN
DETAIL E HANDRAIL HINGE

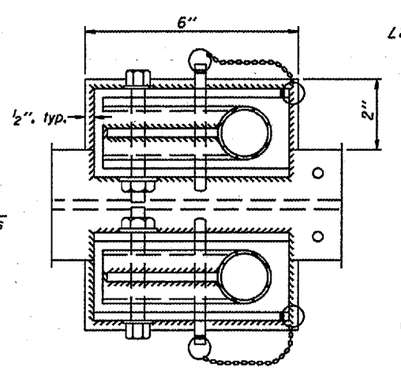

PLAN AT HANDRAIL JOINT
Details not shown same as "PLAN"

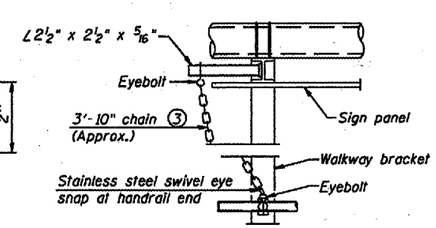

ALTERNATE SAFETY CHAIN ATTACHMENT
Details not shown similar to "Safety Chain" Details
(Walkway omitted for clarity)

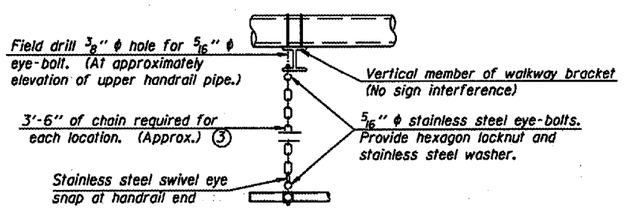

SAFETY CHAIN
One required for each end of each walkway.

③ 3/16" Type 304L stainless steel chain, approximately 12 links per foot.

④ Extrusions may be used in lieu of the details shown, with approval of the Engineer.

This Sheet For Information Only

OVERHEAD SIGN STRUCTURES
ALUMINUM HANDRAIL DETAILS

District 5
Overhead Sign
Structure Replacement

DESIGNED	-
CHECKED	-
DRAWN	-
CHECKED	-

EXAMINED - 20
ENGINEER OF BRIDGE DESIGN
PASSED
ENGINEER OF BRIDGES AND STRUCTURES

NUMBER	REVISION	DATE

OS-A-11 7/01/2006