CONTRACT NO. 70513

ROUTE NO.	SECTION	COUNTY	TOTAL SHEETS	SHEET NO.
FAI 55	*	McLEAN	87	64
FED. ROAD DIST. NO. 7	ILLINOIS	FED. AID PROJECT-		

SHEET NO. 6
10A SHEETS

* (57-4)RS-3 & 1

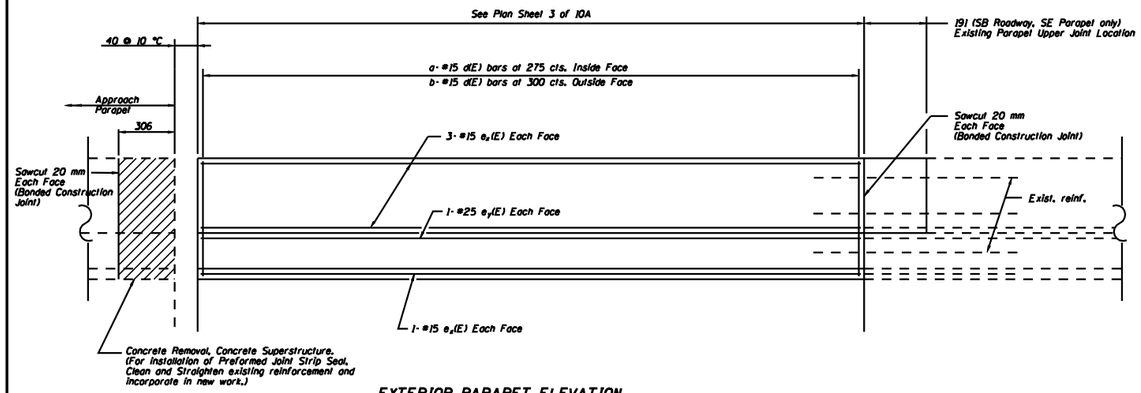

EXTERIOR PARAPET ELEVATION
(Inside Face of North Parapet Shown)

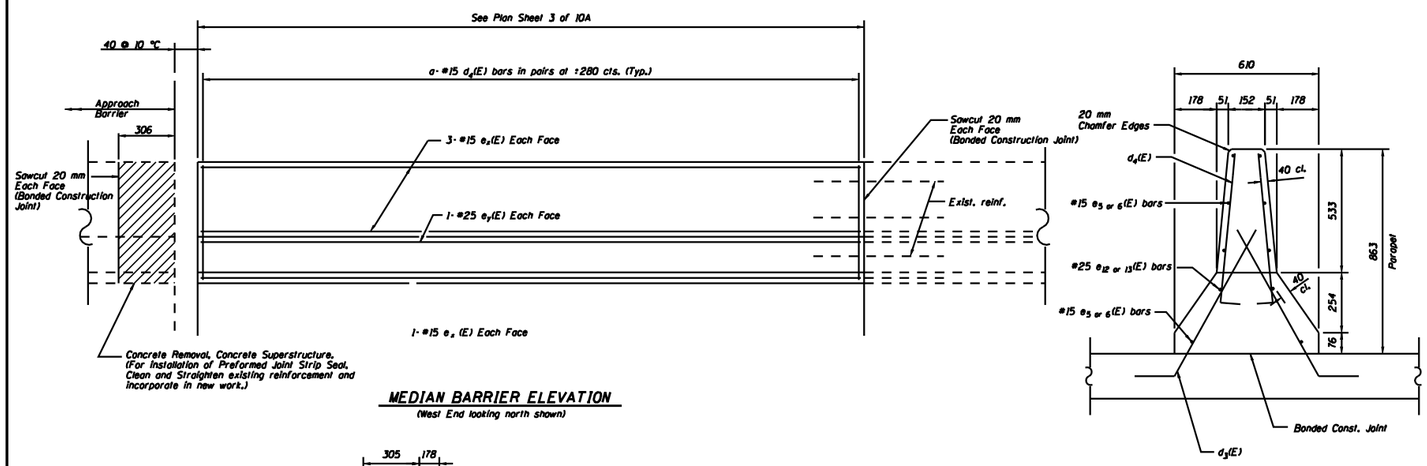

MEDIAN BARRIER ELEVATION
(West End looking north shown)

MEDIAN BARRIER DETAIL

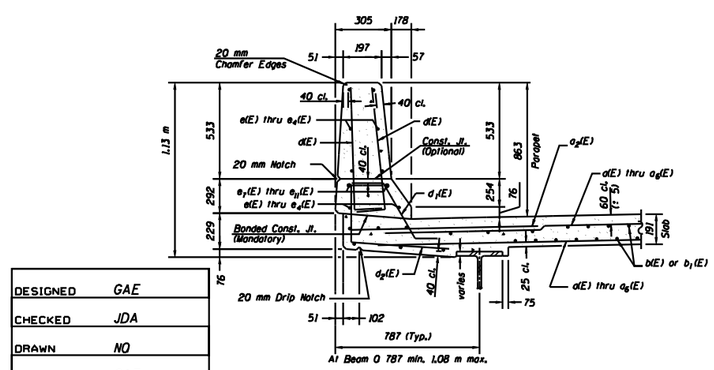

SECTION THRU EXTERIOR PARAPET

DESIGNED	GAE
CHECKED	JDA
DRAWN	NO
CHECKED	GAE

SOUTH BOUND ROADWAY

PARAPET REINFORCEMENT SCHEDULE

	Location	a	b	x	y
Stage 1	SW Parapet	12	11	e(E)	e_7(E)
	SE Parapet	22	20	e_1(E)	e_8(E)
Stage 2	NW Parapet	21	19	e_3(E)	e_{10}(E)
	NE Parapet	12	11	e(E)	e_7(E)
	W Barrier	17	-	e_5(E)	e_{12}(E)
	E Barrier	16	-	e_6(E)	e_{13}(E)

NORTH BOUND ROADWAY

PARAPET REINFORCEMENT SCHEDULE

	Location	a	b	x	y
Stage 1	NW Parapet	18	16	e_2(E)	e_8(E)
	NE Parapet	12	11	e(E)	e_7(E)
Stage 2	SW Parapet	12	11	e(E)	e_7(E)
	SE Parapet	18	16	e_4(E)	e_{11}(E)

BILL OF MATERIAL

SOUTH BOUND ROADWAY

Bar	Number		Size	Length (m)	Shape
	Stage 1	Stage 2			
a(E)	109	-	#15	14.39	
a_2(E)	29	28	#20	1.20	
a_3(E)	41	-	#15	3.40	
a_4(E)	-	61	#15	15.60	
a_5(E)	-	48	#15	17.53	
a_7(E)	58	-	#15	4.46	
a_8(E)	16	-	#20	9.26	
a_{10}(E)	-	4	#20	15.46	
a_{11}(E)	-	8	#20	9.08	
b(E)	118	107	#15	8.53	
d(E)	64	63	#15	0.91	
d_1(E)	33	33	#15	0.78	
d_2(E)	31	30	#15	1.09	
d_3(E)	-	66	#15	0.99	
d_4(E)	-	66	#15	0.835	
e(E)	8	8	#15	2.90	
e_1(E)	8	-	#15	5.81	
e_3(E)	-	8	#15	5.46	
e_5(E)	-	8	#15	4.36	
e_6(E)	-	8	#15	4.16	
e_7(E)	2	2	#25	2.90	
e_8(E)	2	-	#25	5.62	
e_{10}(E)	-	2	#25	5.46	
e_{12}(E)	-	2	#25	4.36	
e_{13}(E)	-	2	#25	4.16	
Reinforcement Bars, Epoxy Coated			kg	10820	
Concrete Superstructure			cu m	76.7	
Bar Splicers			each	104	

NORTH BOUND ROADWAY

Bar	Number		Size	Length (m)	Shape
	Stage 1	Stage 2			
a_1(E)	94	43	#15	10.75	
a_2(E)	24	25	#20	1.20	
a_6(E)	-	52	#15	11.43	
a_9(E)	8	-	#20	10.75	
a_{12} (E)	-	4	#20	10.75	
a_{13} (E)	-	4	#20	11.44	
b_1(E)	71	74	#15	7.46	
d(E)	57	57	#15	0.91	
d_1(E)	30	30	#15	0.78	
d_2(E)	27	27	#15	1.09	
e(E)	8	8	#15	2.90	
e_2(E)	8	-	#15	4.56	
e_4(E)	-	8	#15	4.61	
e_7(E)	2	2	#25	2.90	
e_9(E)	2	-	#25	4.56	
e_{11}(E)	-	2	#25	4.61	
Reinforcement Bars, Epoxy Coated			kg	6130	
Concrete Superstructure			cu m	44.7	
Bar Splicers			each	94	

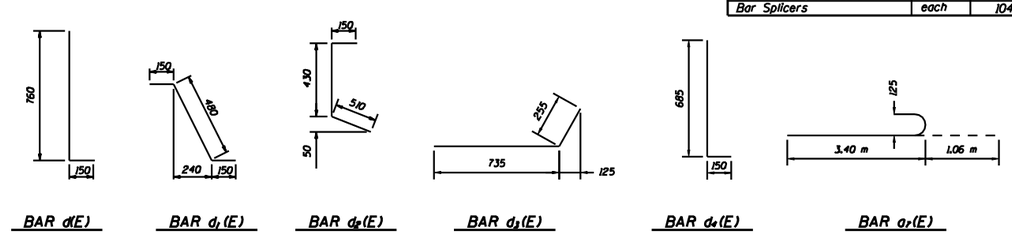

BAR d(E) BAR d_1(E) BAR d_2(E) BAR d_3(E) BAR d_4(E) BAR a_7(E)

SUPERSTRUCTURE DETAILS
F.A.I. 55 OVER BUSINESS U.S. 51
SECTION (57-4)RS-3 & 1
McLEAN COUNTY
SN 057-0024 (NB)
SN 057-0025 (SB)
STA. 37+474.206