F.A.U. ROUTE 3887	CONTRACT NO. 83622 SECTION 97-00084-00-CH	COUNTY KANE
TRAFFIC SIGNALS		
F.H.W.A. REG.5	ILLINOIS	PROJECT CMM-

NOTE: SIGN DIMENSIONS ARE IN ENGLISH UNITS

PANEL SIGN DESIGN TYPE 2

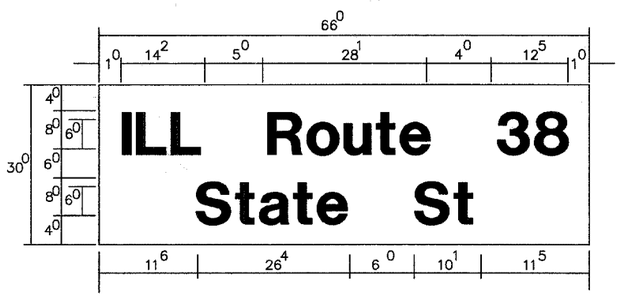

13.75 Sq. Ft. each

2 Required

Design Series D

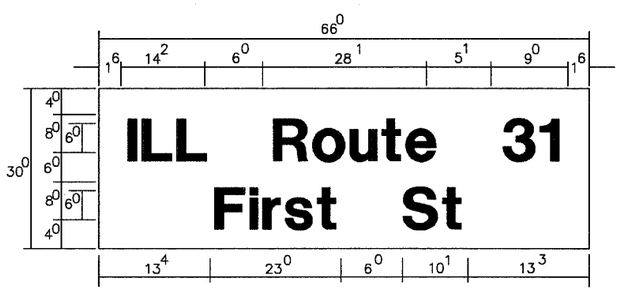

___ Sq. M. each

13.75 Sq. Ft. each

2 Required

Design Series D

GENERAL NOTES

1. WHERE MAST ARM MOUNTED STREET NAME SIGNS ARE SPECIFIED, THE MAST ARM ASSEMBLY AND POLES SHALL BE DESIGNED TO SUPPORT THE LOADINGS CALLED FOR ON STANDARDS 834001, 834006 AND 834011, AS APPLICABLE, PLUS TWO (2) SIGN PANELS 2'-6" x 6'-0" MOUNTED AS SHOWN. THE DESIGN SHALL BE IN ACCORDANCE WITH THE REQUIREMENTS OF THE CURRENT "STANDARD SPECIFICATIONS FOR STRUCTURAL SUPPORTS FOR HIGHWAY SIGNS, LUMINAIRES, AND TRAFFIC SIGNALS" AS PUBLISHED BY THE AMERICAN ASSOCIATION OF STATE HIGHWAY AND TRANSPORTATION OFFICIALS FOR 80 M.P.H. WIND VELOCITY.
2. ALL SIGNS SHALL HAVE A WHITE REFLECTORIZED LEGEND AND BORDER ON A GREEN REFLECTORIZED BACKGROUND, TYPE A SHEETING.
3. THE SIGN LENGTH SHOULD BE INCREASED IN 6-INCH INCREMENTS, BUT THE OVERALL LENGTH SHOULD NOT EXCEED 6'-0".
4. ALL BORDERS SHALL BE 3/4 " WIDE AND CORNER RADIUS SHALL BE 2-1/4 ".
5. SIGNFIX ALUMINUM CHANNEL FRAMING SYSTEM SHALL BE USED FOR ALL SIGNS ATTACHED TO SIGNAL POLES AND POSTS. LOCAL SUPPLIERS OF THE SIGNFIX ALUMINUM CHANNEL FRAMING SYSTEM ARE:
   - * A.K.T. CORPORATION, SCHAUMBURG, IL
   - * TUCKER COMPANY, INC., WAUWATOSA, WI
   - * AMERICAN FABRICATION CO., CHICAGO HEIGHTS, IL
   - * WESTERN TRAFFIC CONTROL INC., CICERO, IL

PARTS LISTING:

SIGN CHANNEL	PART #HPN053 (MED. CHANNEL)
SIGN SCREWS	1/4 " x 14 x 1" H.W.H. #3 SELF TAPPING WITH NEOPRENE WASHER
BRACKETS	PART #HPN034 (UNIVERSAL) CHANNEL CLAMPS WITH STAINLESS STEEL STRAPPING

OTHER BRANDS OF MOUNTING HARDWARE ARE ACCEPTABLE, BASED UPON THE DEPARTMENT'S APPROVAL AND COMPATIBILITY WITH THE CHANNEL/BRACKET OF THE ABOVE PRODUCT.

SUPPORTING CHANNELS

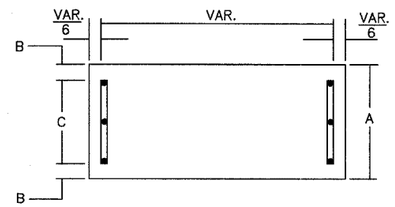

A	B	C
18"	2"	14"

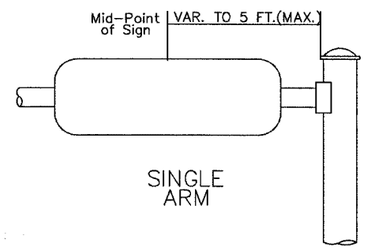

SINGLE ARM

SUPPORTING CHANNELS

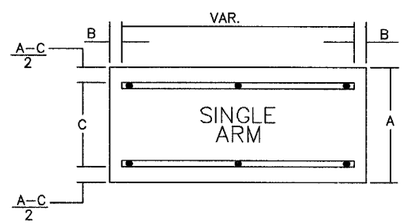

A	B	C
18"	2"	12"
30"	2"	22"

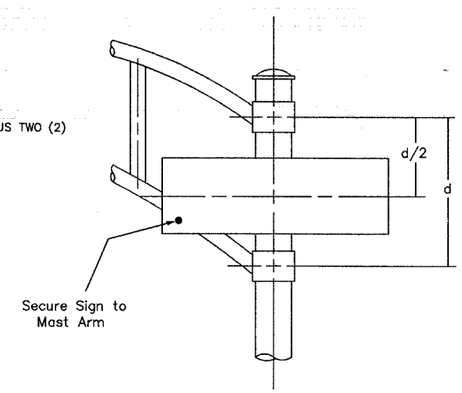

DUAL ARM

SIGNFIX ALUMINUM CHANNEL FRAMING SYSTEM

Shall be used. See Note #5.

Upper Case To Lower Case

Spacing Chart 8-6 Inch Series "C & D"

FIRST LETTER	SECOND LETTER: a c d e g o q		b h i k l m n p r u		f w		j		s t		v y		x		z	
SERIES	C	D	C	D	C	D	C	D	C	D	C	D	C	D	C	D
A W X	1^{2}	1^{4}	1^{4}	1^{5}	1^{2}	1^{4}	0^{6}	1^{0}	1^{1}	1^{4}	0^{6}	1^{0}	1^{1}	1^{2}	1^{2}	1^{4}
B	1^{4}	1^{5}	2^{0}	2^{1}	1^{4}	1^{5}	1^{1}	1^{2}	1^{4}	1^{5}	1^{2}	1^{4}	1^{2}	1^{4}	1^{6}	1^{7}
C E G	1^{4}	1^{5}	2^{0}	2^{1}	1^{2}	1^{4}	0^{6}	1^{0}	1^{2}	1^{4}	1^{2}	1^{4}	1^{4}	1^{5}	1^{4}	1^{5}
D O Q R	1^{4}	1^{5}	2^{0}	2^{1}	1^{4}	1^{5}	0^{6}	1^{0}	1^{2}	1^{4}	1^{2}	1^{4}	1^{4}	1^{5}	1^{4}	1^{5}
F	0^{5}	0^{6}	1^{4}	1^{5}	0^{6}	1^{0}	0^{5}	0^{6}	0^{6}	1^{0}	0^{6}	1^{0}	0^{6}	1^{0}	1^{1}	1^{2}
H I M N	2^{0}	2^{1}	2^{2}	2^{4}	2^{0}	2^{1}	1^{4}	1^{5}	1^{6}	1^{7}	1^{6}	1^{7}	2^{0}	2^{1}	2^{0}	2^{1}
J U	2^{0}	2^{1}	2^{0}	2^{1}	1^{6}	1^{7}	1^{4}	1^{5}	1^{6}	1^{7}	1^{6}	1^{7}	1^{6}	1^{7}	2^{0}	2^{1}
K L	1^{1}	1^{2}	1^{6}	1^{7}	1^{1}	1^{2}	0^{5}	0^{6}	1^{1}	1^{2}	1^{1}	1^{2}	1^{1}	1^{2}	1^{2}	1^{4}
P	1^{2}	1^{4}	1^{4}	1^{5}	1^{2}	1^{4}	0^{5}	0^{6}	1^{1}	1^{2}	1^{1}	1^{2}	1^{2}	1^{4}	1^{2}	1^{4}
S	1^{2}	1^{4}	1^{6}	1^{7}	1^{2}	1^{4}	0^{6}	1^{0}	1^{2}	1^{4}	1^{2}	1^{4}	1^{2}	1^{4}	1^{2}	1^{4}
T	1^{1}	1^{2}	1^{6}	1^{7}	0^{6}	1^{0}	0^{6}	1^{0}	1^{1}	1^{2}	1^{1}	1^{2}	1^{1}	1^{2}	1^{2}	1^{4}
V	0^{6}	1^{0}	1^{4}	1^{5}	1^{1}	1^{2}	0^{6}	1^{0}	1^{2}	1^{4}	1^{2}	1^{4}	1^{2}	1^{4}	1^{2}	1^{4}
Y	0^{5}	0^{6}	1^{4}	1^{5}	0^{6}	1^{0}	0^{5}	0^{6}	0^{5}	0^{7}	0^{5}	0^{6}	0^{6}	1^{0}	1^{1}	1^{2}
Z	1^{6}	1^{7}	2^{2}	2^{4}	1^{6}	1^{7}	1^{2}	1^{4}	1^{6}	1^{7}	1^{6}	1^{7}	1^{6}	1^{7}	2^{0}	2^{1}

Lower Case To Lower Case

Spacing Chart 6 Inch Series "C & D"

FIRST LETTER	SECOND LETTER: a d h g i j l m n q u		b f k o p s		c e		r		t z		v y		w		x	
SERIES	C	D	C	D	C	D	C	D	C	D	C	D	C	D	C	D
a d h g i j l m n q u	1^{6}	1^{7}	2^{2}	2^{4}	1^{6}	1^{7}	1^{2}	1^{4}	1^{4}	1^{5}	1^{4}	1^{5}	1^{6}	1^{7}	1^{6}	1^{7}
b f k o p s	1^{2}	1^{4}	1^{6}	1^{7}	1^{1}	1^{2}	0^{5}	0^{6}	1^{1}	1^{2}	1^{1}	1^{2}	1^{2}	1^{4}	1^{2}	1^{4}
c e	1^{2}	1^{4}	1^{6}	1^{7}	1^{2}	1^{4}	0^{6}	1^{0}	1^{2}	1^{4}	1^{2}	1^{4}	1^{2}	1^{4}	1^{2}	1^{4}
r	0^{6}	1^{0}	1^{2}	1^{4}	0^{6}	1^{0}	0^{3}	0^{3}	0^{5}	0^{6}	0^{5}	0^{6}	0^{6}	1^{0}	0^{6}	1^{0}
t z	1^{2}	1^{4}	1^{6}	1^{7}	1^{2}	1^{4}	0^{6}	1^{0}	1^{1}	1^{2}	1^{1}	1^{2}	1^{2}	1^{4}	1^{2}	1^{4}
v y	1^{1}	1^{2}	1^{4}	1^{5}	1^{1}	1^{2}	0^{5}	0^{6}	0^{6}	1^{0}	0^{6}	1^{0}	1^{1}	1^{2}	1^{1}	1^{2}
w	1^{1}	1^{2}	1^{4}	1^{5}	1^{1}	1^{2}	0^{5}	0^{6}	1^{1}	1^{2}	1^{1}	1^{2}	1^{1}	1^{2}	1^{2}	1^{4}
x	1^{2}	1^{4}	1^{6}	1^{7}	1^{1}	1^{2}	0^{5}	0^{6}	1^{1}	1^{2}	1^{1}	1^{2}	1^{1}	1^{2}	1^{2}	1^{4}

Number To Number

Spacing Chart 8 Inch Series "C & D"

FIRST NUMBER	SECOND NUMBER: 0		1		2		3		4		5		6		7		8		9	
SERIES	C	D	C	D	C	D	C	D	C	D	C	D	C	D	C	D	C	D	C	D
0 9	1^{6}	1^{7}	1^{6}	1^{7}	1^{4}	1^{5}	1^{2}	1^{4}	1^{4}	1^{5}	1^{4}	1^{5}	1^{6}	1^{7}	1^{2}	1^{4}	1^{6}	1^{7}	1^{6}	1^{7}
1	2^{0}	2^{1}	2^{0}	2^{1}	2^{0}	2^{1}	1^{6}	1^{7}	1^{4}	1^{5}	2^{0}	2^{1}	2^{0}	2^{1}	1^{4}	1^{5}	2^{0}	2^{1}	2^{0}	2^{1}
2 3 4	1^{4}	1^{5}	1^{4}	1^{5}	1^{4}	1^{5}	1^{2}	1^{4}	1^{2}	1^{4}	1^{4}	1^{5}	1^{4}	1^{5}	1^{1}	1^{2}	1^{6}	1^{7}	1^{4}	1^{5}
5	1^{4}	1^{5}	1^{4}	1^{5}	1^{4}	1^{5}	1^{1}	1^{2}	1^{1}	1^{2}	1^{4}	1^{5}	1^{4}	1^{5}	1^{1}	1^{2}	1^{4}	1^{5}	1^{4}	1^{5}
6	1^{6}	1^{7}	1^{4}	1^{5}	1^{4}	1^{5}	1^{2}	1^{5}	1^{2}	1^{4}	1^{4}	1^{5}	1^{4}	1^{5}	1^{1}	1^{2}	1^{4}	1^{5}	1^{4}	1^{5}
7	1^{2}	1^{4}	1^{2}	1^{4}	1^{4}	1^{5}	1^{2}	1^{5}	0^{5}	0^{6}	1^{2}	1^{4}	1^{4}	1^{5}	1^{1}	1^{2}	1^{4}	1^{5}	1^{2}	1^{4}
8	1^{6}	1^{7}	1^{6}	1^{7}	1^{4}	1^{5}	1^{2}	1^{5}	1^{2}	1^{4}	1^{4}	1^{5}	1^{6}	1^{7}	1^{2}	1^{4}	1^{6}	1^{7}	1^{4}	1^{5}

UPPER AND LOWER CASE LETTER WIDTHS

LETTERS	6 INCH UPPER CASE LETTERS SERIES C	6 INCH UPPER CASE LETTERS SERIES D	8 INCH UPPER CASE LETTERS SERIES C	8 INCH UPPER CASE LETTERS SERIES D	LETTERS	6 INCH LOWER CASE LETTERS SERIES C	6 INCH LOWER CASE LETTERS SERIES D
A	3^{6}	5^{0}	5^{0}	6^{5}	a	3^{5}	
B	3^{2}	4^{0}	4^{3}	5^{3}	b	3^{5}	
C	3^{2}	4^{0}	4^{3}	5^{3}	c	3^{5}	
D	3^{2}	4^{0}	4^{3}	5^{3}	d	3^{5}	
E	3^{0}	3^{5}	4^{0}	4^{7}	e	3^{5}	
F	3^{0}	3^{5}	4^{0}	4^{7}	f	2^{3}	
G	3^{2}	4^{0}	4^{3}	5^{3}	g	3^{5}	
H	3^{2}	4^{0}	4^{3}	5^{3}	h	3^{5}	
I	0^{7}	0^{7}	1^{1}	1^{2}	i	1^{1}	
J	3^{0}	3^{6}	4^{0}	5^{0}	j	2^{0}	
K	3^{2}	4^{1}	4^{3}	5^{4}	k	3^{5}	
L	3^{0}	3^{5}	4^{0}	4^{7}	l	1^{1}	
M	3^{7}	4^{5}	5^{1}	6^{1}	m	6^{0}	
N	3^{2}	4^{0}	4^{3}	5^{3}	n	3^{5}	
O	3^{4}	4^{2}	4^{5}	5^{5}	o	3^{6}	
P	3^{2}	4^{0}	4^{3}	5^{3}	p	3^{5}	
Q	3^{4}	4^{2}	4^{5}	5^{5}	q	3^{5}	
R	3^{2}	4^{0}	4^{3}	5^{3}	r	2^{6}	
S	3^{2}	4^{0}	4^{3}	5^{3}	s	3^{6}	
T	3^{0}	3^{5}	4^{0}	4^{7}	t	2^{7}	
U	3^{2}	4^{0}	4^{3}	5^{3}	u	3^{5}	
V	3^{5}	4^{4}	4^{7}	6^{0}	v	4^{2}	
W	4^{4}	5^{2}	6^{0}	7^{0}	w	5^{5}	
X	3^{4}	4^{0}	4^{5}	5^{3}	x	4^{4}	
Y	3^{6}	5^{0}	5^{0}	6^{6}	y	4^{6}	
Z	3^{2}	4^{0}	4^{3}	5^{3}	z	3^{6}	

NUMBER	6 INCH SERIES C	6 INCH SERIES D	8 INCH SERIES C	8 INCH SERIES D
1	1^{2}	1^{4}	1^{5}	2^{0}
2	3^{2}	4^{0}	4^{3}	5^{3}
3	3^{2}	4^{0}	4^{3}	5^{3}
4	3^{5}	4^{3}	4^{7}	5^{7}
5	3^{2}	4^{0}	4^{3}	5^{3}
6	3^{2}	4^{0}	4^{3}	5^{3}
7	3^{2}	4^{0}	4^{3}	5^{3}
8	3^{2}	4^{0}	4^{3}	5^{3}
9	3^{2}	4^{0}	4^{3}	5^{3}
0	3^{4}	4^{2}	4^{5}	5^{5}

EXAMPLE, 2 (3) DENOTES $\frac{3}{8}$"

REVISIONS	
NAME	DATE
D.A.Z./D.A.G.	11/90
	6/98
CADD	10/00

ILLINOIS DEPARTMENT OF TRANSPORT

DISTRICT ONE
MAST ARM MOUNTED
STREET NAME SIGNS

ILL RTE 38 (STATE ST)

SCALE: NONE
DATE: 1-01-02

DRAWN BY
DESIGNED
CHECKED