CONTRACT NO. #83853

F.A. RTE.	SECTION	COUNTY	TOTAL SHEETS	SHEET NO.
2585	97-00071-00-PV	COOK	116	64
STA.		TO STA.		
FED. ROAD DIST. NO.	ILLINOIS	FED. AID PROJECT		

NOTES FOR TEMPORARY TRAFFIC SIGNALS

1. ALL CONTROL EQUIPMENT INCLUDING EMERGENCY PRE-EMPTION AND COMMUNICATION DEVICES FOR THE TEMPORARY TRAFFIC SIGNAL(S) SHALL BE FURNISHED BY THE CONTRACTOR.
2. ONLY CONTROLLERS SUPPLIED BY ONE OF THE DISTRICT APPROVED CLOSED LOOP EQUIPMENT MANUFACTURERS WILL BE APPROVED FOR USE AT TEMPORARY SIGNAL LOCATIONS. ALL CONTROLLERS USED FOR TEMPORARY TRAFFIC SIGNALS SHALL BE FULLY ACTUATED NEMA MICROPROCESSOR BASED WITH RS232 DATA ENTRY PORTS COMPATIBLE WITH EXISTING MONITORING SOFTWARE APPROVED BY IDOT DISTRICT 1, INSTALLED IN A NEMA TS1 OR TS2 CABINET. ONLY ONE BRAND OF CONTROLLER WILL BE ACCEPTED FOR ANY ONE CONTRACT.
3. ALL TRAFFIC SIGNAL SECTIONS AND PEDESTRIAN SIGNAL SECTIONS SHALL BE 12" (300mm). HEADS SHALL BE PLACED AS INDICATED ON THE TEMPORARY TRAFFIC SIGNAL PLAN OR AS DIRECTED BY THE ENGINEER. THE CONTRACTOR SHALL FURNISH ENOUGH CABLE SLACK TO RELOCATE HEADS TO ANY POSITION ON THE SPAN WIRE OR AT LOCATIONS ILLUSTRATED ON THE PLANS FOR CONSTRUCTION STAGING. THE TEMPORARY TRAFFIC SIGNAL SHALL REMAIN IN OPERATION DURING ALL SIGNAL HEAD RELOCATIONS. EACH TEMPORARY TRAFFIC SIGNAL HEAD SHALL HAVE ITS OWN CABLE FROM THE CONTROLLER CABINET TO THE SIGNAL HEAD.
4. ALL EXISTING STREET NAME AND INTERSECTION REGULATORY SIGNS SHALL BE REMOVED FROM EXISTING POLES, RELOCATED AND SECURELY FASTENED TO THE SIGNAL SPAN WIRE OR WOOD POLE AS DIRECTED BY THE ENGINEER.
5. ANY TEMPORARY SIGNAL WITHIN AN EXISTING CLOSED LOOP TRAFFIC SIGNAL SYSTEM SHALL BE INTERCONNECTED TO THAT SYSTEM USING SIMILAR BRAND CONTROL EQUIPMENT.
6. THE TEMPORARY TRAFFIC SIGNAL SHALL HAVE THE SIGNAL HEAD DISPLAYS, SIGNAL HEAD PLACEMENTS AND CONTROLLER PHASING MATCH THE EXISTING TRAFFIC SIGNAL, AT THE TIME OF THE TURN ON, IF NO TRAFFIC STAGING IS IN PLACE OR WILL NOT BE STAGED ON THE DAY OF THE TURN ON.

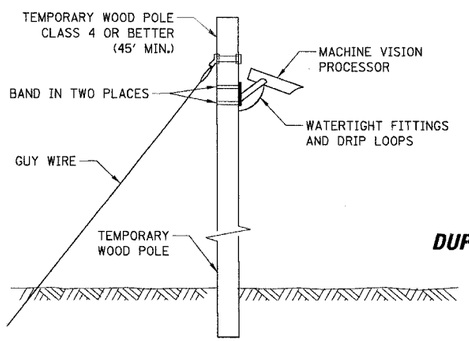

TEMPORARY AUTOSCOPE MOUNTING DETAIL
(NOT TO SCALE)

NOTES:

1. THE TRAFFIC SIGNAL CONTROLLER EQUIPMENT FOR THIS PROJECT SHALL BE "ECONOLITE" TO MATCH THE EXISTING ADJACENT SYSTEM.
2. ALL VIDEO DETECTION ZONES ARE TO BE REDEFINED DURING EACH STAGE OF CONSTRUCTION AND ARE INCIDENTAL OF THE TEMPORARY TRAFFIC INSTALLATION.

THE FOLLOWING EXISTING TRAFFIC SIGNAL EQUIPMENT SHALL BE REMOVED BY THE CONTRACTOR, SHALL REMAIN THE PROPERTY OF THE STATE AND SHALL BE DELIVERED BY THE CONTRACTOR TO THE STATE'S TRAFFIC SIGNAL MAINTENANCE CONTRACTOR'S MAIN FACILITY AS PER THE TRAFFIC SIGNAL SPECIFICATIONS.

1 EACH CONTROLLER AND CABINET (COMPLETE)

THE FOLLOWING EXISTING TRAFFIC SIGNAL EQUIPMENT SHALL BE REMOVED BY THE CONTRACTOR AND SHALL REMAIN THE PROPERTY OF THE AGENCY LISTED BELOW. THE CONTRACTOR SHALL SAFELY STORE AND ARRANGE FOR PICK UP OF ALL EQUIPMENT TO BE RETURNED TO THE LISTED AGENCY AS PER THE TRAFFIC SIGNAL SPECIFICATIONS.

AGENCY: CITY OF ROLLING MEADOWS

3 EACH EMERGENCY VEHICLE LIGHT DETECTOR AND CONFIRMATION BEACON

1 EACH LIGHT DETECTOR AMPLIFIER

THE FOLLOWING ITEMS SHALL BE REMOVED BY THE CONTRACTOR AND SHALL BE DISPOSED OF BY THEM OUTSIDE THE RIGHT-OF-WAY AT THEIR EXPENSE. THE SALVAGE VALUE OF THE REMOVED EQUIPMENT SHALL BE REFLECTED IN THE CONTRACT BID PRICE.

5 EACH SIGNAL HEAD, 1-FACE, 3-SECTION
3 EACH SIGNAL HEAD, 1-FACE, 5-SECTION
3 EACH SIGNAL HEAD, 2-FACE, 1-3 SECTION, 1-5 SECTION
3 EACH ALUMINUM MAST ARM AND POLE
5 EACH SIGNAL POST

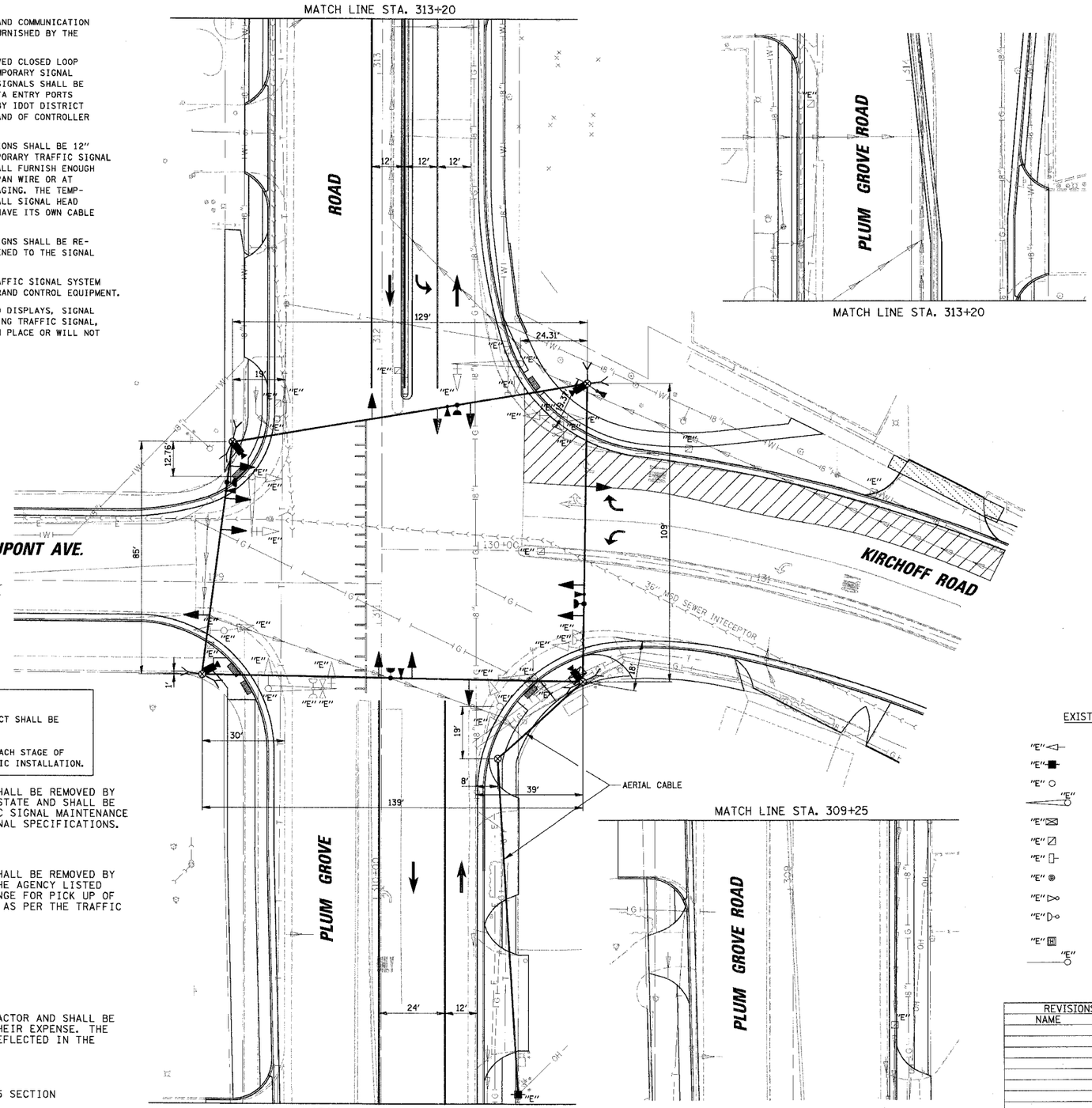

N

SCALE IN FEET
1" = 20'

TEMPORARY TRAFFIC SIGNAL LEGEND

- TEMPORARY TRAFFIC SIGNAL HEAD SPAN WIRE MOUNTED ORIGINAL LOCATION
- TEMPORARY TRAFFIC SIGNAL HEAD SPAN WIRE MOUNTED SECONDARY LOCATION
- TEMPORARY WOOD POLE (CLASS 5 OR BETTER) 45 FOOT (13.7m) MINIMUM
- TEMPORARY CONTROLLER CABINET
- TEMPORARY SPAN WIRE, TETHER WIRE, AND CABLE
- TEMPORARY SERVICE INSTALLATION
- TEMPORARY PEDESTRIAN SIGNAL HEAD, BRACKET MOUNTED
- MACHINE VISION PROCESSOR
- PEDESTRIAN PUSHBUTTON DETECTOR
- EMERGENCY VEHICLE LIGHT DETECTOR
- CONFIRMATION BEACON
- VEHICLE DETECTOR, INDUCTION LOOP
- UD UNIT DUCT
- CT COMMON TRENCH
- C.S. CONDUIT IN TRENCH (T) OR PUSHED (P)
- HANDHOLE
- HEAVY DUTY HANDHOLE

EXISTING EQUIPMENT TO BE REMOVED LEGEND

- "E" EXISTING SIGNAL HEAD TO BE REMOVED
- "E" EXISTING SERVICE INSTALLATION TO BE REMOVED
- "E" EXISTING SIGNAL POST AND FOUNDATION TO BE REMOVED
- "E" EXISTING ALUMINUM MAST ARM POLE AND FOUNDATION TO BE REMOVED
- "E" EXISTING CONTROLLER AND FOUNDATION TO BE REMOVED
- "E" EXISTING HANDHOLE TO BE REMOVED
- "E" EXISTING PEDESTRIAN SIGNAL HEAD TO BE REMOVED
- "E" EXISTING PEDESTRIAN PUSHBUTTON TO BE REMOVED
- "E" EMERGENCY VEHICLE LIGHT DETECTOR TO BE REMOVED
- "E" CONFIRMATION BEACON TO BE REMOVED
- "E" EXISTING HEAVY-DUTY HANDHOLE TO BE REMOVED
- "E" EXISTING STEEL MAST ARM POLE AND FOUNDATION TO BE REMOVED

REVISIONS	
NAME	DATE

ILLINOIS DEPARTMENT OF TRANSPORTATION

TEMPORARY TRAFFIC SIGNAL INSTALLATION AND REMOVE EXISTING TRAFFIC SIGNAL EQUIPMENT STAGE I

PLUM GROVE ROAD AND KIRCHOFF RD. / DUPONT AVE.
ROLLING MEADOWS, ILLINOIS

SCALE: 1" = 20'
DATE: 6/8/2006
DRAWN BY: FPB
DESIGNED BY: ABR
CHECKED BY: GMZ

CHRISTOPHER B. BURKE ENGINEERING LTD.
9575 West Higgins Road, Suite 600
Rosemont, Illinois 60018
(847) 823-0500

PLAN — SURVEYED / PLOT SCALE 1" = 20' / DATE / CALCULATED / CHECKED / BY / DATE / FIELD BK. / PAGE / FILE NAME / NOTE BOOK NO.

PROFILE — SURVEYED / PLOT SCALE 1" = 20' / DATE / CALCULATED / CHECKED / BY / DATE / FIELD BK. / PAGE / FILE NAME: NOTAFRS CFRG / NOTE BOOK NO.

n:\rolmdws\98361br48\traffic_design\tmp_krchof-stgl.dgn