CONTRACT NO. 83902

F.A.P. R.T.E.	SECTION	COUNTY	TOTAL SHEETS	SHEET NO.
1340	06-00048-00-RS	COOK	36	13
DETAILS				
		ILLINOIS		

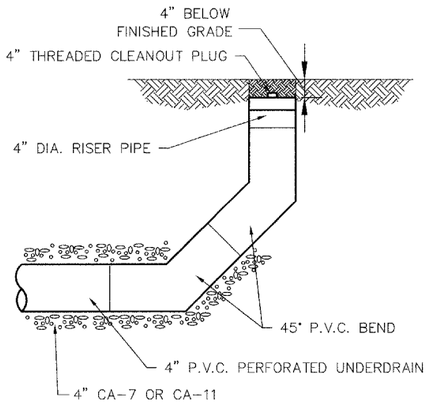

DRAIN PIPE CLEAN-OUT

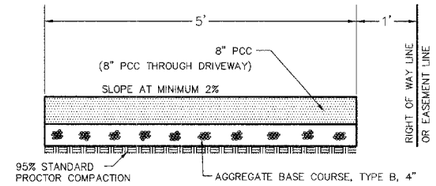

NOTE:

1. SET 3/4" EXPANSION JOINTS AT POINTS ABUTTING CURB OR PAVEMENT AND AT 45' MAX. INTERVALS.
2. CONTROL JOINTS SHALL BE 1/8" TO 1/4" WIDE AND 1/4 OF THE SIDEWALK THICKNESS DEEP. THE EDGE OF THE CONTROL JOINTS SHALL BE GIVEN A 1/4" RADIUS.
3. TWO #5 DEFORMED STEEL BARS SHALL BE INSTALLED IN THE SIDEWALK CENTERED OVER ALL TRENCH CROSSINGS. THEY SHALL EXTEND 10 FEET BEYOND THE EDGES OF THE TRENCH.

PCC SIDEWALK 8"

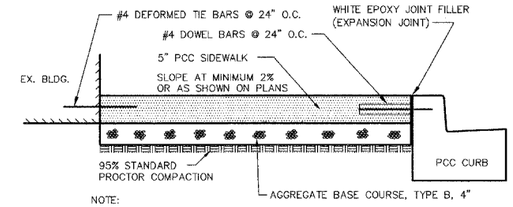

NOTE:

1. SET 3/4" WHITE EPOXY EXPANSION JOINTS AT POINTS ABUTTING CURB OR PAVEMENT AND AT 60' MAX. INTERVALS.
2. CONTROL JOINTS SHALL BE 1/8" TO 1/4" WIDE AND 1/4 OF THE SIDEWALK THICKNESS DEEP. THE EDGE OF THE CONTROL JOINTS SHALL BE GIVEN A 1/4" RADIUS.
3. SIDEWALK WIDTH AS SHOWN ON PLANS.
3. ALL STEEL BARS SHOWN ARE EPOXY COATED

PCC SIDEWALK 5" (ADJACENT TO BUILDINGS)

NOTES:

1. PIPE OPENINGS TO BE PRECAST INTO WALLS.
2. PRECAST REINFORCED CONCRETE SECTIONS WITH PREFORMED BITUMINOUS JOINTS AND INTEGRAL PRECAST BOTTOMS.
3. FRAME TO BE LAID IN 3/4" MASTIC BED.
4. ADJUSTING RINGS NOT TO EXCEED 8".

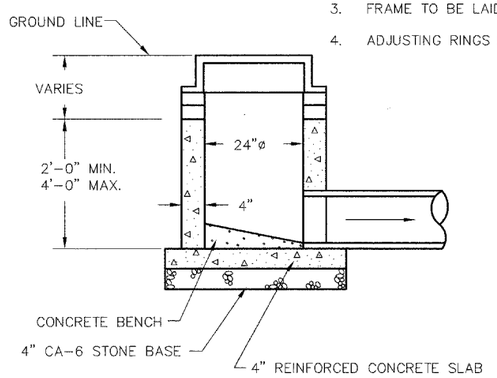

INLET

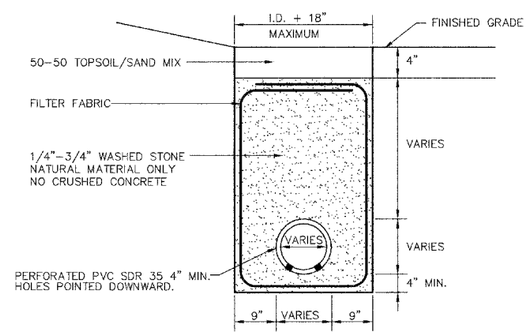

UNDERDRAIN DETAIL

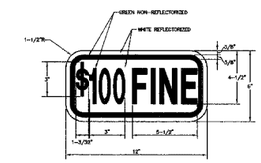

R7-8

R7-1101

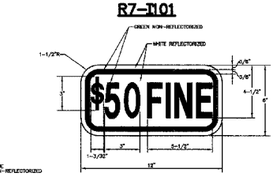

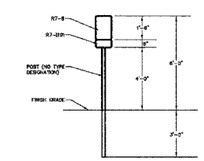

HANDICAPPED PARKING SIGN

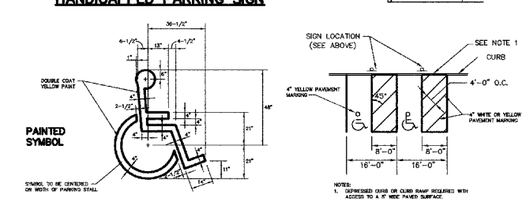

HANDICAPPED PARKING STALL AND SIGN DIMENSIONS

NOTES:

1. PIPE OPENINGS TO BE PRECAST INTO WALLS.
2. PRECAST REINFORCED CONCRETE SECTIONS WITH PREFORMED BITUMINOUS JOINTS AND INTEGRAL PRECAST BOTTOMS.
3. FRAME TO BE LAID IN 3/4" MASTIC BED.
4. ADJUSTING RINGS NOT TO EXCEED 8".
5. FRAME AND GRATE AS SPECIFIED.

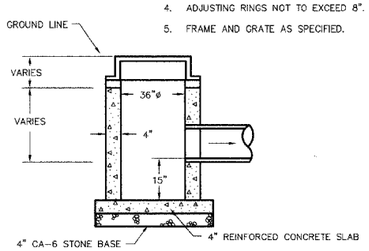

CATCHBASIN TYPE 'B'

NOTES:

1. SERVICE PIPE TO BE WEAVED IN TRENCH TO ALLOW AT LEAST ONE (1) FOOT EXTRA LENGTH IN ITS LENGTH.
2. UPON COMPLETION OF WATER SERVICE CONSTRUCTION, ALL BOXES ARE TO BE FULLY EXTENDED AND LEFT PROTRUDING ABOVE THE PROPOSED GRADE.
3. GRANULAR BACKFILL TO BE PLACED UNDER PAVEMENT AS SPECIFIED.

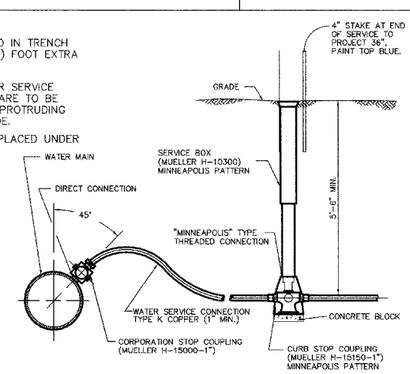

WATER SERVICE DETAIL

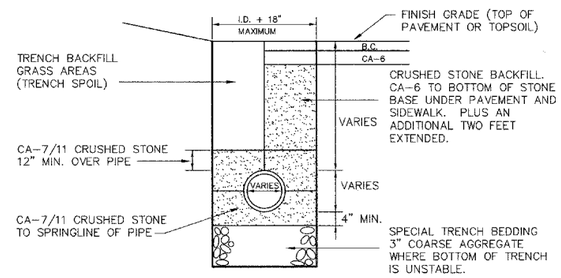

STORM TRENCH DETAIL

PLANS PREPARED BY:

GEWALT HAMILTON ASSOCIATES, INC.
Consulting Engineers & Surveyors
850 Forest Edge Drive
Vernon Hills, IL 60061
(847) 478-9700
(847) 478-9701 Fax

REVISIONS	
NAME	DATE

ILLINOIS DEPARTMENT OF TRANSPORTATION

DETAILS

BUSINESS DISTRICT IMPROVEMENTS
TOUHY AVE. AND CRAWFORD AVE.
SECTION # 06-00048-00-RS

SCALE: N.T.S.
DATE: 11-2-06

DRAWN BY: DSM
DESIGNED BY: DSM
CHECKED BY: SDB