F.A.U. ROUTE	CONTRACT NO. 87335	COUNTY	TOT SHT
5348	STATE SECTION 06-00160-02-WR	DEKALB	48
SPECIAL DETAILS			
F.H.W.A. REG.5	ILLINOIS	PROJECT HPP-2	

TYPICAL DRIVEWAY PLAN:

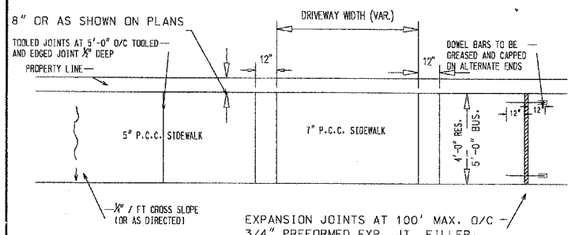

EXPANSION JOINTS AT 100' MAX. O/C — 3/4" PREFORMED EXP. JT. FILLER, EMBEDDED IN GRAVEL BASE MIN 1"

SAWCUT JOINTS WILL NOT BE PERMITTED

TYPICAL SECTION SIDEWALK DETAILS:

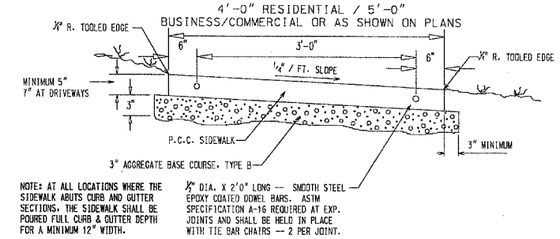

NOTE: AT ALL LOCATIONS WHERE THE SIDEWALK ABUTS CURB AND GUTTER SECTIONS, THE SIDEWALK SHALL BE POURED FULL CURB & GUTTER DEPTH FOR A MINIMUM 12" WIDTH.

THE CONTRACT UNIT PRICE FOR P.C.C. SIDEWALK 5" AND 7" SHALL INCLUDE THE DOWEL BARS, EXPANSION JOINTS, TOOLED JOINTS AND BASE MATERIAL AS SPECIFIED

STANDARD DETAIL FOR P.C.C. SIDEWALK, 5" & 7"	REVISIONS 03/20/01 WCB	CITY OF DEKALB STREET STANDARD ST-105

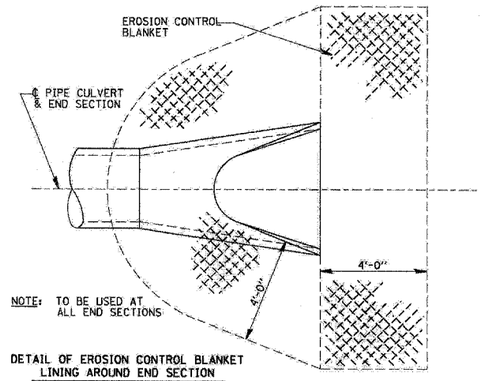

NOTE: TO BE USED AT ALL END SECTIONS

DETAIL OF EROSION CONTROL BLANKET LINING AROUND END SECTION

251-2

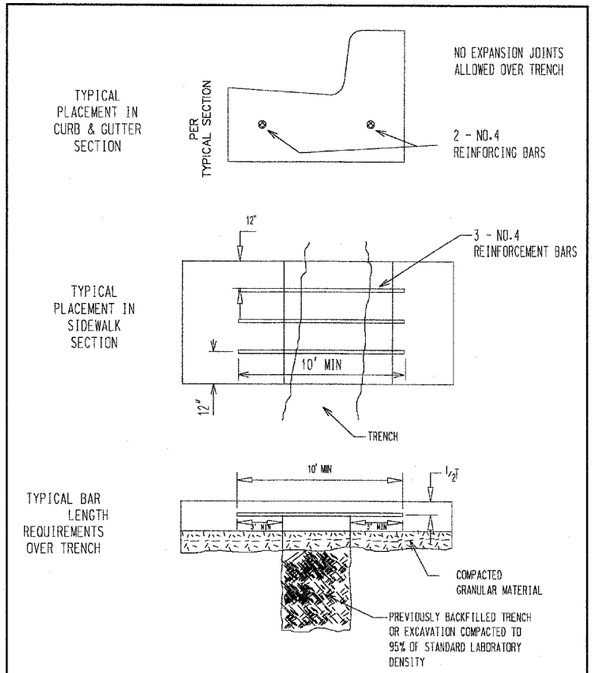

STANDARD DETAIL FOR REINFORCING CURB & GUTTER OR SIDEWALK INSTALLED OVER A TRENCH	REVISIONS 01/03/01 CEW	CITY OF DEKALB STREET STANDARD ST-103

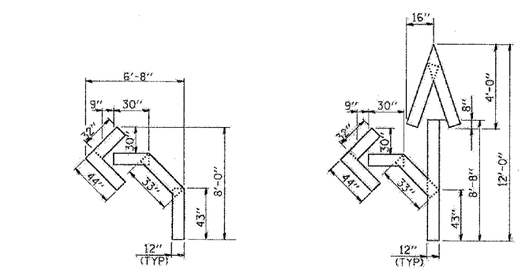

QUANTITY
12" LINE = 16 LIN. FT.
OR 4" LINE = 48 LIN. FT.

QUANTITY
12" LINE = 29 LIN. FT.
OR 4" LINE = 87 LIN. FT.

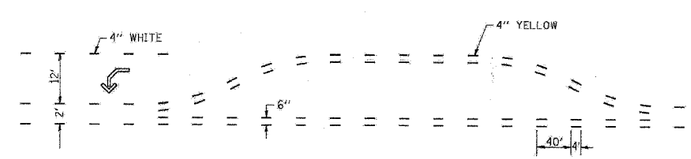

703-1

SHORT-TERM PAVEMENT MARKING FOR MEDIANS AND ARROWS