CONTRACT NO. 98950

F.A. RTE.	SECTION	COUNTY	TOTAL SHEETS	SHEET NO.
*	**	WILLIAMSON	917	91
STA.		TO STA.		
FED. ROAD DIST. NO.	ILLINOIS	FED. AID PROJECT		

* I-57, & OLD IL 13 (FAU 9629)
** (X1-6-2)VB-2,(X1-6)HBK-2

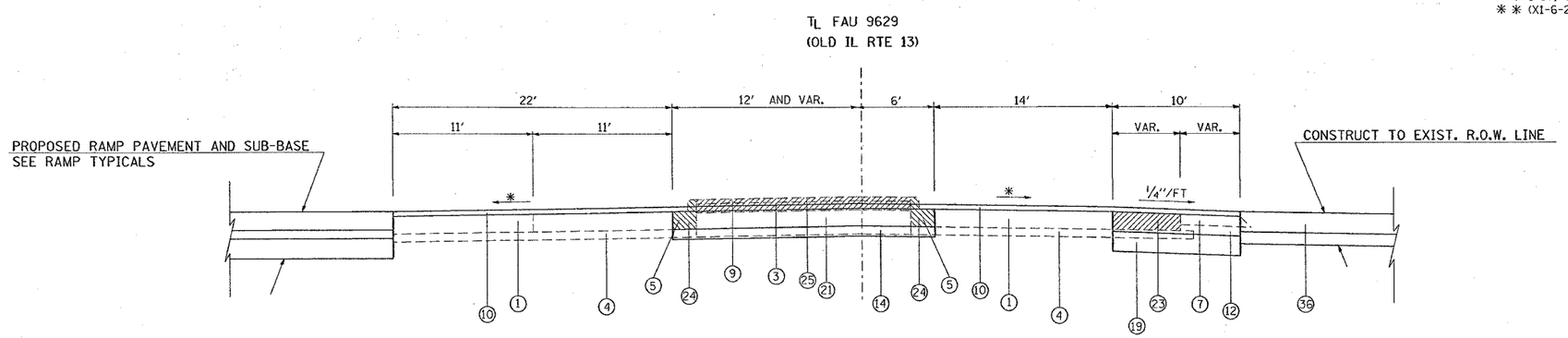

TO BE USED:
STA. 771+98 TO STA. 773+10

* MATCH EXISTING

1. EXISTING CONCRETE PAVEMENT, 10"
2. EXISTING BITUMINOUS SHOULDERS 6"
3. EXISTING AGGREGATE BASE COURSE, 4"
4. EXISTING SUB-BASE GRANULAR MATERIAL TYPE A 4"
5. EXISTING COMBINATION CONCRETE CURB AND GUTTER
6. EXISTING SOLID CONCRETE MEDIAN
7. EXISTING AGGREGATE SHOULDER
8. EXISTING BITUMINOUS RESURFACING
9. EXISTING BITUMINOUS MEDIAN SURFACE, 1½"
10. POLYMERIZED BITUMINOUS CONCRETE SURFACE COURSE, SUPERPAVE, MIX "D", N105, 1½"
11. POLYMERIZED BITUMINOUS CONCRETE BINDER COURSE, SUPERPAVE, IL-19.0, N105, 9½"
12. POLYMERIZED BITUMINOUS CONCRETE BINDER COURSE, SUPERPAVE, IL-19.0, N105, 8½"
13.
14. SUB-BASE GRANULAR MATERIAL, TYPE A 6"
15. AGGREGATE SHOULDERS, TYPE B (WEDGE)
16. BITUMINOUS SHOULDERS SUPERPAVE
17. BITUMINOUS SHOULDERS SUPERPAVE 9½"
18. BITUMINOUS SHOULDERS SUPERPAVE 8½"
19. PROCESSING LIME MODIFIED SOILS 12"
20. THERMOPLASTIC PAVEMENT MARKING - LINE 4"
21. PORTLAND CEMENT CONCRETE PAVEMENT 10" (JOINTED)
22. PORTLAND CEMENT CONCRETE SIDEWALK 5 INCH
23. PAVEMENT REMOVAL
24. COMBINATION CURB AND GUTTER REMOVAL
25. MEDIAN REMOVAL
26. PAVED SHOULDER REMOVAL
27. COMBINATION CONCRETE CURB AND GUTTER, TYPE B-6.06
28. COMBINATION CONCRETE CURB AND GUTTER, TYPE B-6.24
29. CONCRETE MEDIAN SURFACE, 4 INCH
30. CONCRETE MEDIAN (SPECIAL)
31.
32. SLOPE WALL 4 INCH (SEE BRIDGE PLANS)
33. BITUMINOUS SHOULDERS SUPERPAVE 8"
34. CORRUGATED MEDIAN REMOVAL
35. BITUMINOUS CONCRETE BINDER COURSE, SUPERPAVE, IL-19.0, N90
36. PORTLAND CEMENT CONCRETE PAVEMENT 8" (JOINTED)

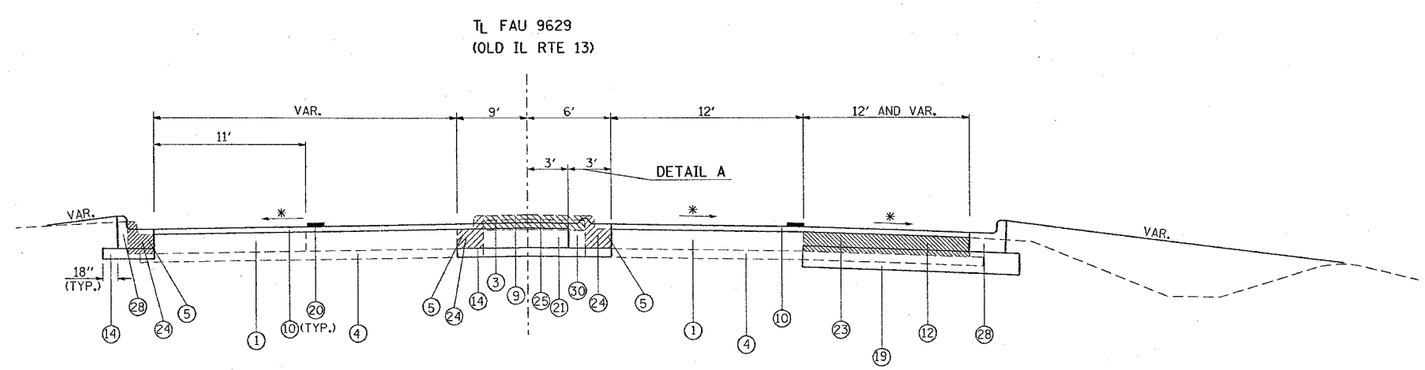

TO BE USED:
STA. 773+10 TO STA. 775+30

* MATCH EXISTING
** MATCH SLOPE OF PAVEMENT

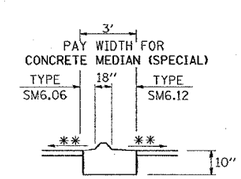

DETAIL A
ENDS STA. 774+66

SHEET 9 OF 12

REVISIONS	
NAME	DATE

ILLINOIS DEPARTMENT OF TRANSPORTATION

OLD IL 13
TYPICAL SECTIONS

SCALE: VERT. NONE HORIZ.
DATE
DRAWN BY CNH
CHECKED BY

PLOT DATE = 10/24/2006
FILE NAME = a:\projects\d902802\old13\old13p3.dgn
PLOT SCALE = 50.0000 ' / IN.
USER NAME = headon