CONTRACT NO. 98950

F.A. RTE.	SECTION	COUNTY	TOTAL SHEETS	SHEET NO.
*	**	WILLIAMSON	917	811
STA.		TO STA.		
FED. ROAD DIST. NO.	ILLINOIS	FED. AID PROJECT		

* I-57, & OLD IL 13 (FAU 9629)
** (X1-6-2)VB-2,(X1-6)HBK-2

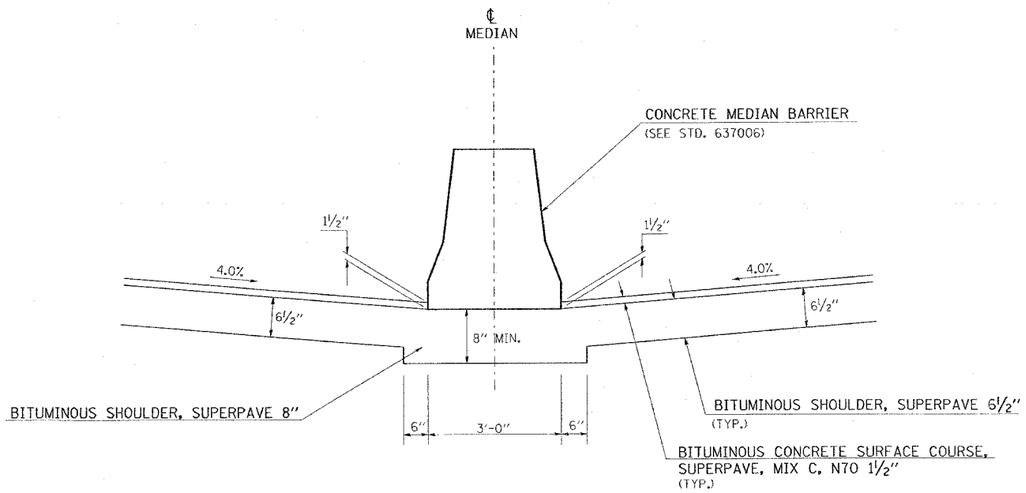

CASE 1

(NB AND SB LANES ARE AT SAME ELEVATION)

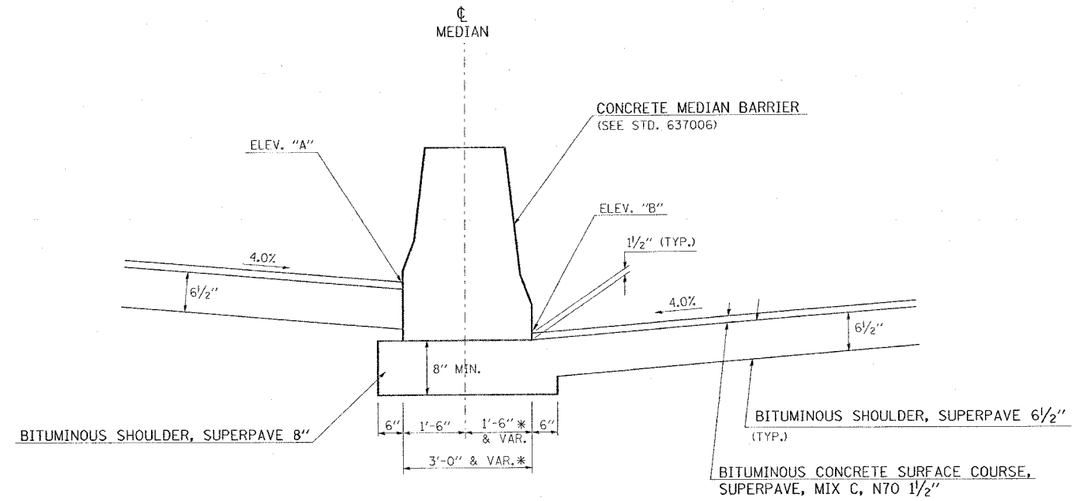

CASE 2

(NB AND SB LANES ARE AT DIFFERENT ELEVATIONS)

* INCREASE DIMENSION BY ½ INCH FOR EACH 6" INCREMENT OF ELEVATION DIFFERENCE BETWEEN "A" AND "B"

NOTES:

1. THE METHOD AND SEQUENCE OF CONSTRUCTION WILL BE THE CONTRACTORS OPTION, BUT SHALL BE APPROVED BY THE ENGINEER.
2. PAYMENT FOR **BITUMINOUS SHOULDER, SUPERPAVE, 6½"** SHALL BE BASED ON THE NUMBER OF SQUARE YARDS ACTUALLY PLACED TO THE DIMENSIONS SHOWN, AND NO ADDITIONAL PAYMENT WILL BE MADE IF THE CONTRACTOR CHOOSES TO BUILD THE SHOULDER TO A GREATER THICKNESS.

REVISIONS	
NAME	DATE

ILLINOIS DEPARTMENT OF TRANSPORTATION

DETAIL OF BITUMINOUS SHOULDER UNDER CONCRETE MEDIAN BARRIER

SCALE: VERT. NONE HORIZ.

DATE

DRAWN BY CNH

CHECKED BY EES

PLOT DATE = 10/14/2006
FILE NAME = c:\pw_work\pw2802\ild13\ild13c3.dgn
PLOT SCALE = 50.0000 ' / IN
USER NAME = headon