CONTRACT NO. 98950

F.A. RTE.	SECTION	COUNTY	TOTAL SHEETS	SHEET NO.
*	**	WILLIAMSON	917	829
STA.		TO STA.		
FED. ROAD DIST. NO.	ILLINOIS	FED. AID PROJECT		

* I-57, & OLD IL 13 (FAU 9629)
* * (X1-6-2)VB-2,(X1-6)HBK-2

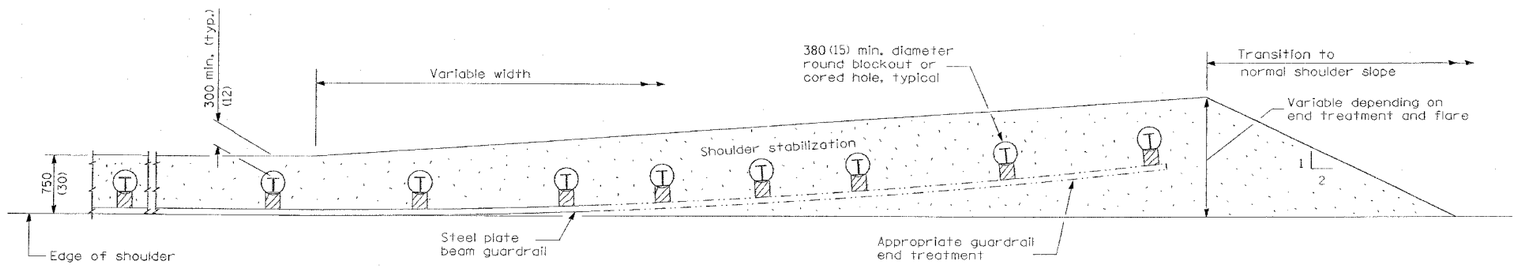

PLAN

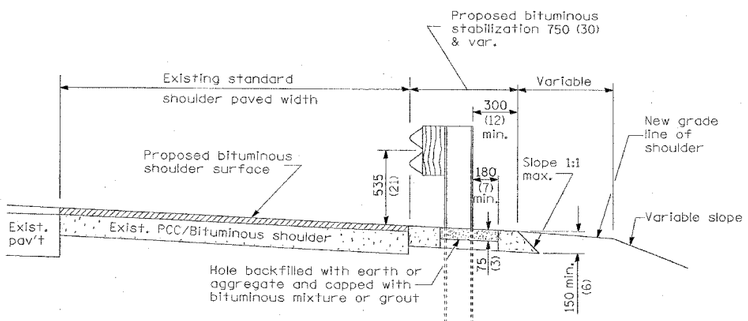

RESURFACING

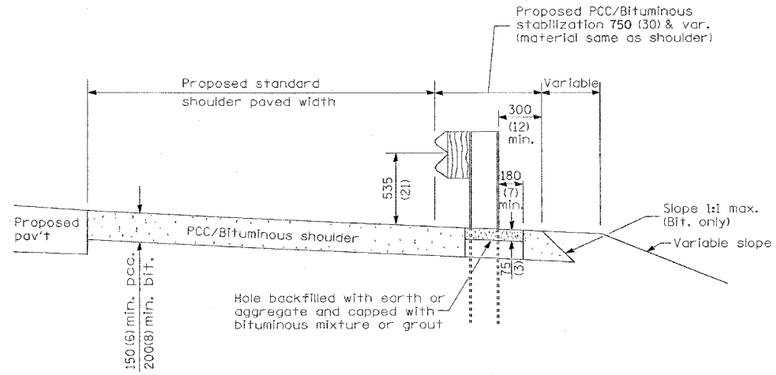

NEW CONSTRUCTION

GENERAL NOTES

See Standard 482001, 482006 or 483001 for details not shown.

All dimensions are in millimeters (inches) unless otherwise shown.

REVISIONS	
NAME	DATE

ILLINOIS DEPARTMENT OF TRANSPORTATION

PCC / BITUMINOUS STABILIZATION AT STEEL PLATE BEAM GUARDRAIL

STANDARD 630201-03

SCALE: VERT. NO SCALE HORIZ.

DATE

DRAWN BY CNH

CHECKED BY

PLOT DATE = 10/14/2006
FILE NAME = c:\projects\rd98282\old13\old13s3.dgn
PLOT SCALE = 50.0000 ' / IN.
USER NAME = hesdon