CONTRACT NO. 98964

F.A.P. RTE.	SECTION	COUNTY	TOTAL SHEETS	SHEET NO.
877	101 RS-1	WHITE/GALLATIN	22	14

MILLING TAPER DETAIL
TRANSITION INTO AND OUT OF INLAY SECTIONS

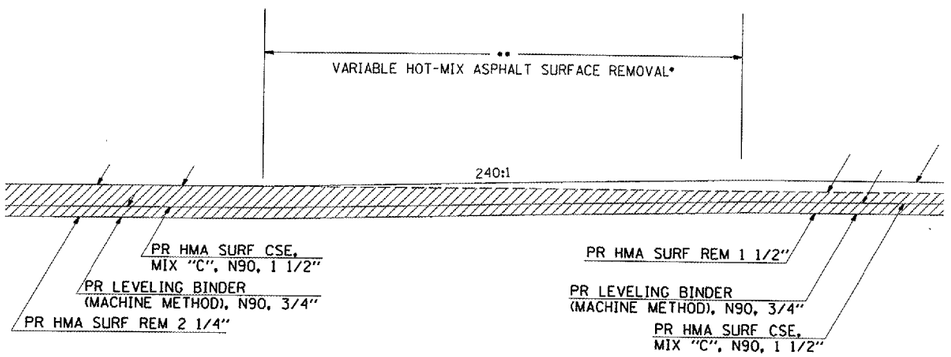

* VARIABLE DEPTH HOT-MIX ASPHALT SURFACE REMOVAL WILL BE PAID FOR AS HOT-MIX ASPHALT SURFACE REMOVAL 1 1/2"
**TAPER LENGTH AS DIRECTED BY THE ENGINEER TO MAINTAIN 240:1 TAPER RATIO.

TO BE USED:
STA. 16+65 BEGINNING OF INLAY
STA. 35+62 END OF INLAY
STA. 87+55 BEGINNING OF INLAY
STA. 89+56 END OF INLAY
STA. 90+56 BEGINNING OF INLAY
STA. 96+25 END OF INLAY
STA. 106+81 BEGINNING OF INLAY
STA. 116+03 END OF INLAY
STA. 119+90 BEGINNING OF INLAY
STA. 125+39 END OF INLAY
STA. 130+60 BEGINNING OF INLAY
STA. 143+00 END OF INLAY
STA. 153+36 BEGINNING OF INLAY
STA. 175+45 END OF INLAY
STA. 273+31 BEGINNING OF INLAY
STA. 278+57 END OF INLAY
STA. 304+30 BEGINNING OF INLAY
STA. 308+62 END OF INLAY
STA. 316+87 BEGINNING OF INLAY
STA. 328+55 END OF INLAY
STA. 415+75 BEGINNING OF INLAY
STA. 421+72 END OF INLAY

TRANSITION DETAIL

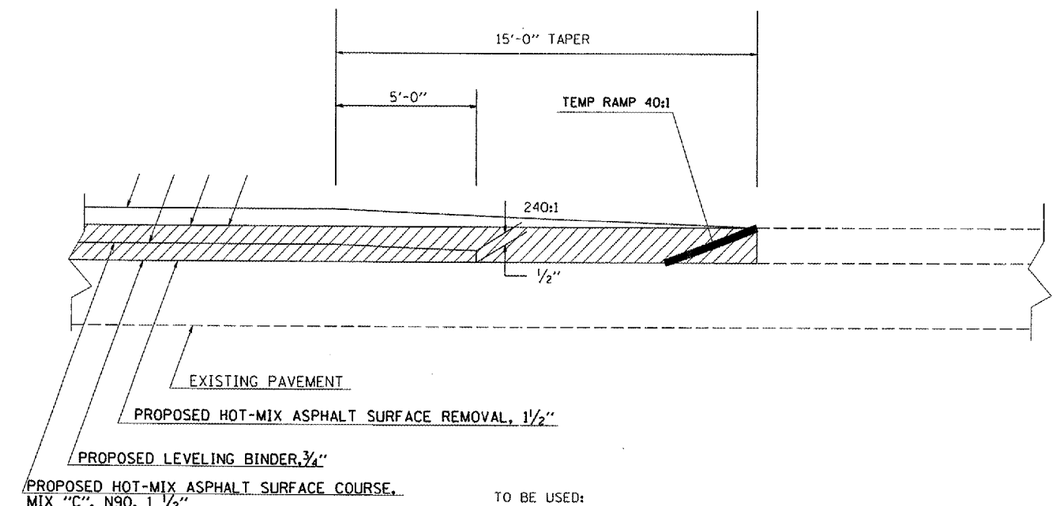

TO BE USED:
STA. 145+93 TO STA. 146+08 BEGINNING OF JOB
STA. 425+23 TO STA. 425+38 END OF JOB
STA. 6+95.5 TO STA. 7+10.5 (SN 097-0036)
STA. 7+53.5 TO STA. 7+68.5 (SN 097-0036)
STA. 177+52.5 TO STA. 177+67.5 (SN 097-0067)
STA. 178+77.5 TO STA. 178+92.5 (SN 097-0067)
STA. 239+49 TO STA. 239+64 (SN 097-0037)
STA. 240+06 TO STA. 240+21 (SN 097-0037)

TEMPORARY RAMP DETAIL
FOR INLAY SECTIONS

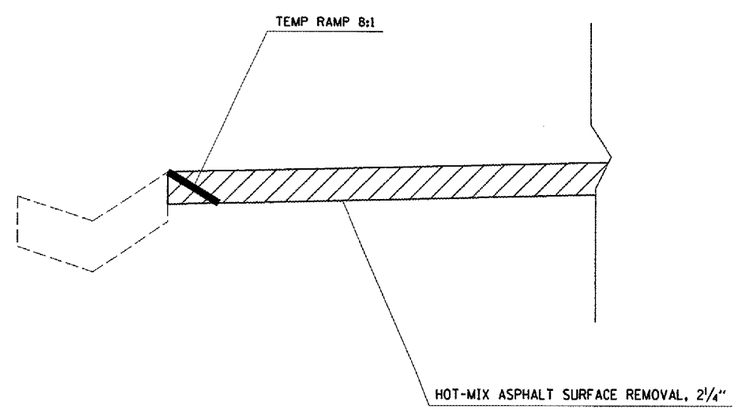

TO BE USED:
STA. 28+22 RT (HEALLY RD)
STA. 95+85 RT (DENIUM RD)
STA. 122+34 LT (AWALT LANE)
STA. 122+53 RT (AWALT LANE)
RT (700 E)
LT (700 E)
STA. 305+27 LT (950 E)
STA. 318+06 RT (JONES RD)

PLOT DATE : 3/21/2007
FILE NAME : c:\pwworking\d902286\d902286sa.m32
PLOT SCALE : 105.8824 ' / IN.
USER NAME : coleamn

MILLING TAPER, TRANSITION, AND TEMPORARY RAMP DETAILS