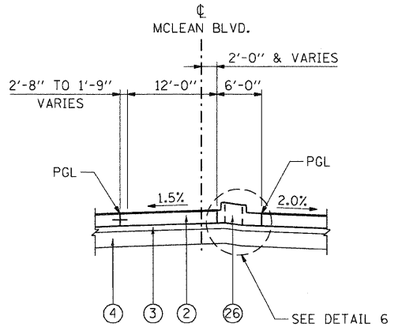

DETAIL M-5A

STA. 83+60.65 TO STA. 84+67.63

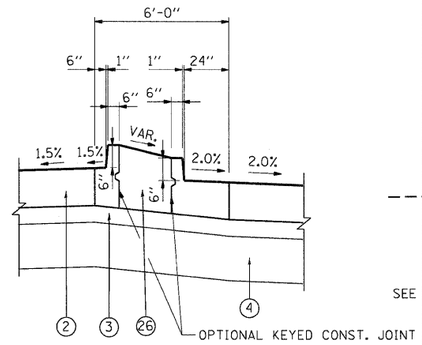

DETAIL 6

CONCRETE MEDIAN, TYPE SB (SPECIAL)

STA. 83+60.65 TO STA. 84+67.63

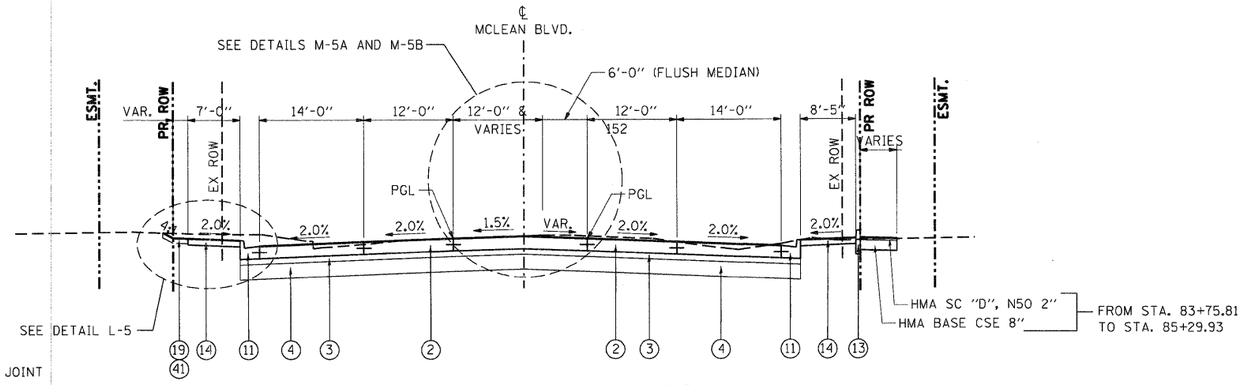

STA. 82+06.25 TO STA. 83+60.65 - SEE INTERSECTION DETAILS

PROPOSED TYPICAL SECTION

McLEAN BOULEVARD

STA. 82+06.25 TO STA. 86+70.00

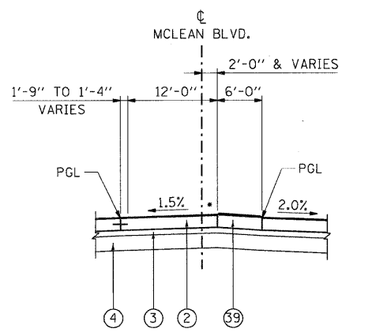

* USE A 10' TRANSITION LENGTH NORTH END OF THE CORRUGATED MEDIAN TO TRANSITION THE CROWN TO THE CENTERLINE

DETAIL M-5B

STA. 84+67.63 TO STA. 85+17.66

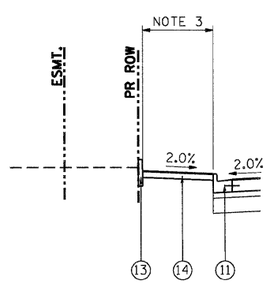

NOTE 3: SIDE WALK WIDTH IS 8'-5" FROM STA. 86+13.00 TO STA. 86+53.72; SIDE WALK WIDTH VARIES FROM 8'-6" TO 9'-0" FROM STA. 86+88.22 TO STA. 88+27.67

DETAIL L-5

STA. 86+13.00 TO STA. 86+53.72

STA. 86+88.22 TO STA. 88+27.67

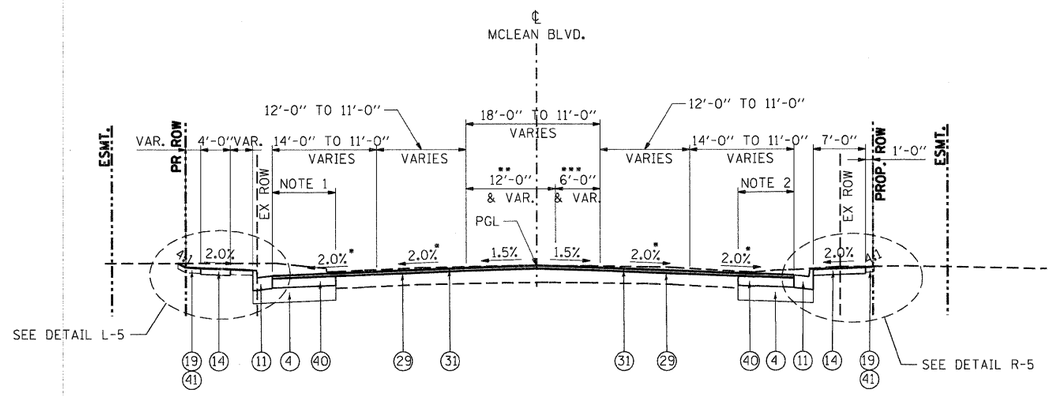

NOTE 1: WIDENING WIDTH VARIES FROM 7'-6" TO 1'-0" FROM STA. 86+70.00 TO STA. 88+71.44

NOTE 2: WIDENING WIDTH VARIES FROM 7'-3" TO 1'-0" FROM STA. 86+70.00 TO STA. 88+66.46

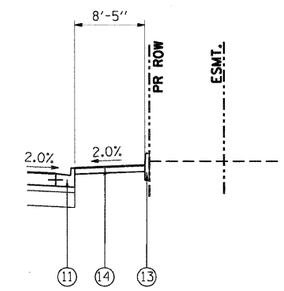

DETAIL R-5

STA. 86+70.00 TO STA. 87+25.59

* TRANSITION CROSS SLOPES (-2.0% TO -1.5%) FROM STA. 88+35.00 TO STA. 88+50.00

** STA. 86+70 TO 88+20 LEFT TURN LANE TAPER (12' TO 0')

*** STA. 86+70 TO 88+20 PAINTED MEDIAN TAPERS FROM 6'-0" TO 13'-0"

PROPOSED TYPICAL SECTION

McLEAN BOULEVARD

STA. 86+70.00 TO STA. 89+00.00

NOTE: SEE PAVEMENT JOINTING PLANS FOR PAVEMENT JOINTS.

EXISTING LEGEND (REMOVAL)

- (A) PCC PAVEMENT (10" AND VARIES)
- (B) HMA SURFACE (3" AND VARIES)
- (C) HMA SHOULDER (8" AND VARIES)
- (D) HMA SHOULDER (6" AND VARIES)
- (E) FENCE
- (F) CONCRETE MEDIAN BARRIER & BASE
- (G) PCC SHOULDER (10" AND VARIES)
- (H) TOPSOIL REMOVAL (X")
- (I) HMA BASE COURSE
- (J) HMA PAVEMENT
- (K) PCC SIDE WALK
- (L) CURB AND GUTTER
- (M) CONCRETE MEDIAN
- (N) STEEL PLATE BEAM GUARDRAIL
- (O) TEMP PAVEMENT (SEE NOTE 3)
- (P) TEMPORARY CONCRETE BARRIER
- (R) RETAINING WALL (CAST-IN-PLACE)
- (S) TEMP. SOIL RETENTION SYSTEM
- (T) SUBBASE GRANULAR MATERIAL, TYPE C (10")
- (U) PCC PAVEMENT
- (V) PCC PAVEMENT (11" AND VARIES)
- (W) HMA SURFACE (4" AND VARIES)
- (X) HMA SURFACE (5" AND VARIES)
- (Y) HMA SURFACE (6" AND VARIES)
- (Z) CONC CURB TB
- (AA) REMOVAL AND DISPOSAL OF UNSUITABLE MATERIAL

PROPOSED LEGEND (PGES)

- (1) CONTINUOUSLY REINFORCED CONCRETE PAVEMENT 10 3/4"
- (2) PCC PVT 10 JOINTED
- (3) STABILIZED SUBBASE (HMA) 4 1/2"
- (4) AGGREGATE SUBGRADE 12"
- (5) HOT-MIX ASPHALT SURACE COURSE, MIX "D", N70, 2"
- (6) SUB-BASE GRANULAR MATERIAL, TYPE B 12"
- (7) CONCRETE BARRIER, DOUBLE FACE, 32" HEIGHT
- (8) CONCRETE BARRIER BASE
- (9) AGG WEDGE SHLD TYPE B
- (10) COMB CC&G TB6.12
- (11) COMB CC&G TB6.24
- (12) COMB CC&G TM4.24
- (13) CONC CURB TB SPL
- (14) PC CONC SIDEWALK 5
- (15) SPBGR TY A 6FT POSTS
- (16) EMBANKMENT
- (17) RETAINING WALL (SEE STRUCTURAL PLANS)
- (18) DRILL AND GROUT #6 TIE BARS
- (19) TOPSOIL FURNISH AND PLACE, 6"
- (20) TOPSOIL FURNISH AND PLACE, 10"
- (21) HOT-MIX ASPHALT SURFACE COURSE, MIX "D", N70, 1 3/4"
- (22) HOT-MIX ASPHALT BASE COURSE, 8"
- (23) SHOULDER RUMBLE STRIPS, 16"
- (24) AGGREGATE SURFACE COURSE, TYPE B, 4"
- (25) CONCRETE MEDIAN SURFACE, 4 INCH
- (26) CONCRETE MEDIAN, TYPE SB (SPECIAL)
- (27) POLY. HMA SURFACE COURSE, MIX "F", N90 1 3/4"
- (28) CHAIN LINK FENCE, 4'
- (29) POLY. LEVELING BINDER (MM), IL-4.75, N50 3/4" (MIN)
- (30) HOT-MIX ASPHALT SURFACE COURSE, MIX "D", N70, 3"
- (31) POLY. HMA SURFACE COURSE, MIX "F", N90 2"
- (32) COMB CC&G TB6.06
- (33) AGGREGATE SHOULDERS, TYPE B 4"
- (34) SEEDING (SEE LANDSCAPING PLANS)
- (35) PCC SHOULDERS 10 3/4"
- (36) PCC SHOULDERS 10"
- (37) AGGREGATE SHOULDERS, TYPE B 10"
- (38) CONCRETE BARRIER, SINGLE FACE 42" HEIGHT (SPECIAL)
- (39) CORRUGATED MEDIAN
- (40) HOT-MIX ASPHALT BASE COURSE, 7"
- (41) SODDING, SALT TOLERANT