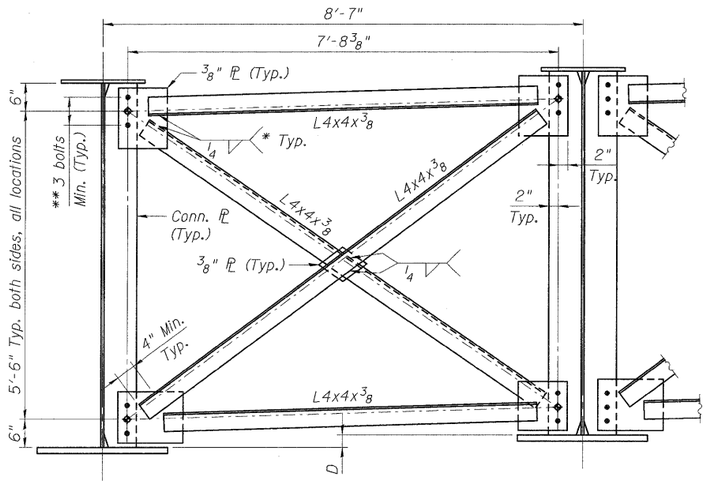

* Fillet weld angles along 3 sides on one face of gusset plate.

D1 - TYPICAL INTERIOR CROSS FRAME

(275 thus)

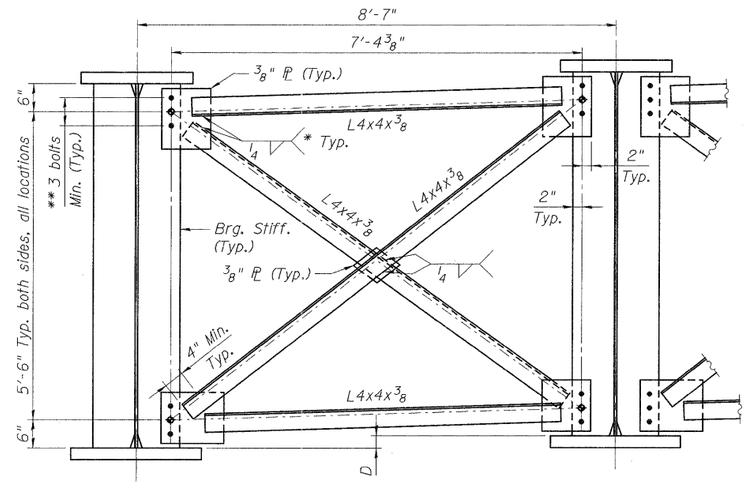

* Fillet weld angles along 3 sides on one face of gusset plate.

D2 - PIER CROSS FRAME

(22 thus)

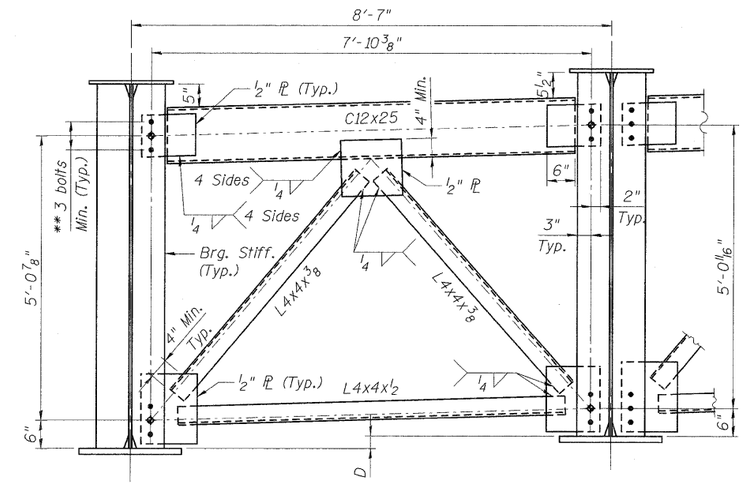

Place cross frame with channel flanges and outstanding angle legs outward from abutment backwall.

D3 - WEST ABUTMENT CROSS FRAME

(10 thus)

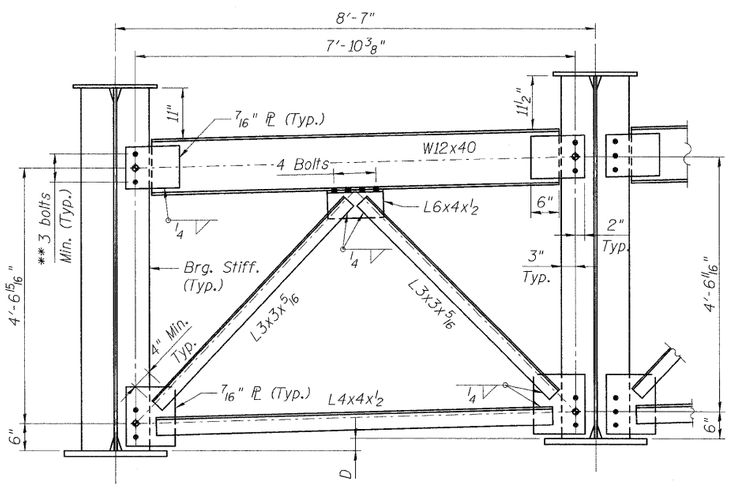

Place cross frame with outstanding angle legs outward from abutment backwall.

D4 - EAST ABUTMENT CROSS FRAME

(10 thus)

** Bolts 7/8"ϕ, Holes 1 1/16"ϕ. Two hardened washers required for each set of oversized holes.

CROSS FRAME DIMENSIONS

GIRDER BAY	D
1-2	2 11/16"
2-3	2 11/16"
3-4	2 11/16"
4-5	2 5/8"
5-6	-2 11/16"
6-7	0
7-8	2 11/16"
8-9	2 11/16"
9-10	2 11/16"
10-11	2 11/16"
11-12	2 11/16"

◆ Centroid of bolt group and workpoint of member principal axes

NOTES:

1. All Structural Steel shall be AASHTO M270 Grade 50, except fill plates.
2. All cross frames between girders shall be installed with erection pins and bolts in accordance with the erection plan approved by the Engineer. Individual cross frames at supports may be temporarily disconnected to install bearing anchor rods.
3. Load carrying components designated "NTR" shall conform to the Impact Testing Requirements, Zone 2.
4. For Bearing Stiffener PL sizes, see Sht. S-36.

..\P450277-60H45-001-STEELDETAIL_DGN ..\ALLSNUM-60H45-001-BORDER.DGN
1-31-2012,15:18:34 BAUGHMMD \\FS-0044\AM\VAULT_D-TRANS.07\2202\21379-001\STRUCT\CAD\60H45\P450277\SHEET\P450277-60H45-001-STEELDETAIL.SHT.DGN

FILE NAME = $FILEL$	USER NAME = $USER$	DESIGNED - MDB	REVISED -	STATE OF ILLINOIS DEPARTMENT OF TRANSPORTATION US 20 OVER MCLEAN BOULEVARD	STEEL DETAILS 1 OF 3			F.A.P. RTE.	SECTION	COUNTY	TOTAL SHEETS	SHEET NO.
		DRAWN - MDB	REVISED -					345	8R-R	KANE	794	509
TENG TENG & ASSOCIATES, INC. ENGINEERS/ARCHITECTS/PLANNERS CHICAGO, ILLINOIS	PLOT SCALE = $SCALE$	CHECKED - CCE	REVISED -					SN 045-0077		CONTRACT NO. 60H45		
	PLOT DATE = $DATE$	DATE - 01/16/12	REVISED -		SCALE:	SHEET NO. S-37 OF S-62	STATION 98+32.18	FED. ROAD DIST. NO. 7	ILLINOIS	FED. AID PROJECT		