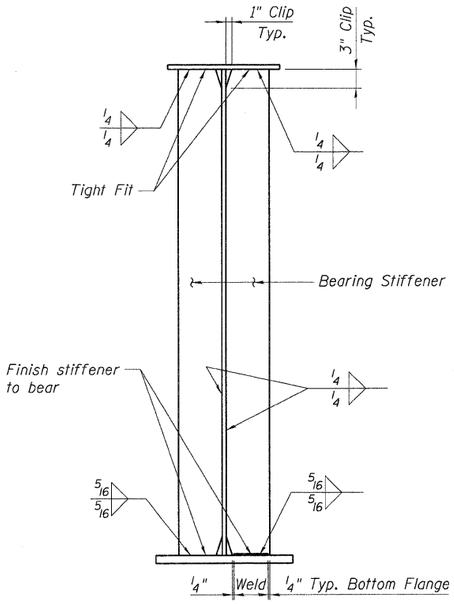

BEARING STIFFENER DETAIL AT WEST AND EAST ABUTMENTS

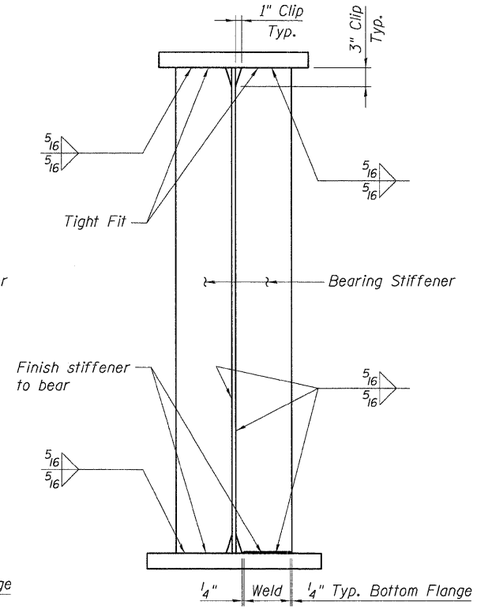

BEARING STIFFENER DETAIL AT PIERS 1 AND 2

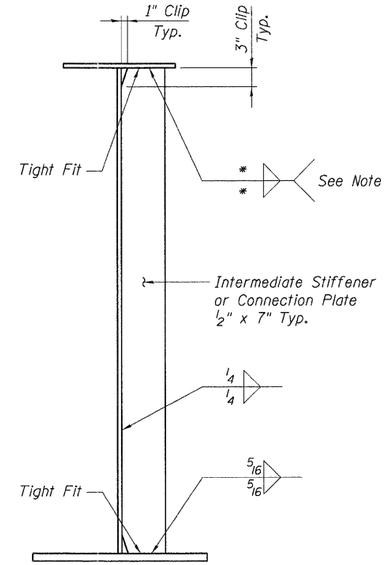

INTERMEDIATE STIFFENER AND CONNECTION PL DETAIL

* Note:
Intermediate Stiffener and Connection plate welds to 3/4" top flange in span segments shall be 1/4" fillet welds. Welds to thicker top flanges in pier segments shall be 5/16" fillet welds. See dimensions A, C and D for limits of span segments and dimension B for limits of pier segments in the Girder Elevation on Sht. S-36.

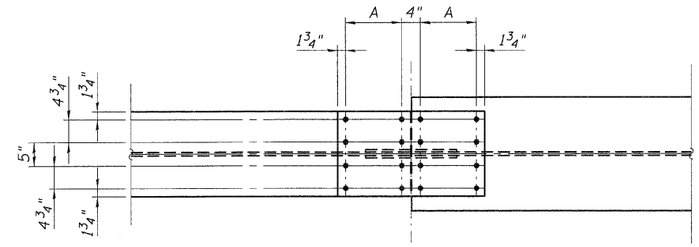

FIELD SPLICE - TOP FLANGE

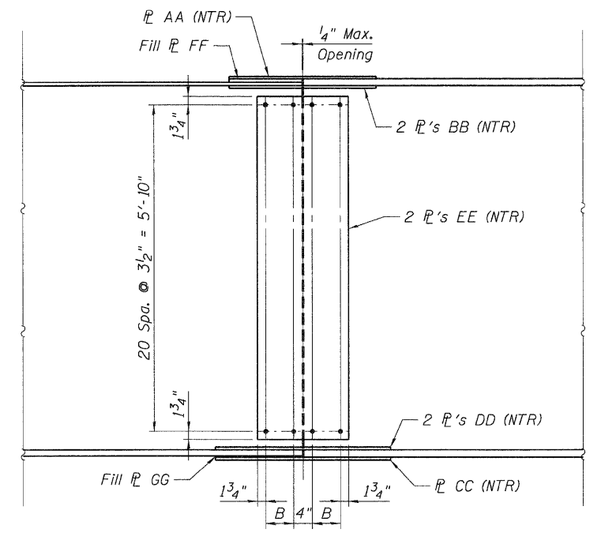

FIELD SPLICE - ELEVATION

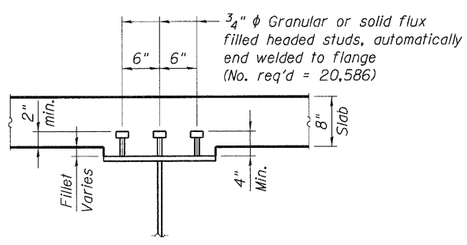

SHEAR STUD CONNECTOR

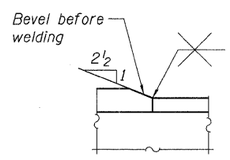

DETAIL 1

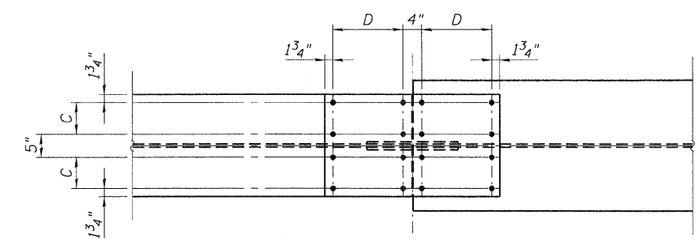

FIELD SPLICE - BOTTOM FLANGE

FIELD SPLICE BOLT SPACING

FIELD SPLICE	A	B	C	D
FS-1	4 Spa. @ 3" = 1'-0"	2 Spa. @ 3" = 6"	2 Spa. @ 3 3/8" = 6 3/4"	5 Spa. @ 3" = 1'-3"
FS-2	4 Spa. @ 3" = 1'-0"	2 Spa. @ 3" = 6"	2 Spa. @ 4 7/8" = 9 3/4"	6 Spa. @ 3" = 1'-6"
FS-3	3 Spa. @ 3" = 9"	2 Spa. @ 3" = 6"	2 Spa. @ 4 7/8" = 9 3/4"	6 Spa. @ 3" = 1'-6"
FS-4	4 Spa. @ 3" = 1'-0"	2 Spa. @ 3" = 6"	2 Spa. @ 4 7/8" = 9 3/4"	6 Spa. @ 3" = 1'-6"
FS-5	4 Spa. @ 3" = 1'-0"	2 Spa. @ 3" = 6"	2 Spa. @ 3 3/8" = 6 3/4"	5 Spa. @ 3" = 1'-3"

FIELD SPLICE PLATE SIZES

FIELD SPLICE	AA	BB	CC	DD	EE	FF	GG
FS-1	1/2" x 18" x 2'-7 1/2"	1/2" x 8 1/4" x 2'-7 1/2"	5/8" x 22" x 3'-1 1/2"	5/8" x 10 1/4" x 3'-1 1/2"	1/2" x 19 1/2" x 6'-1 1/2"	3/4" x 18" x 1'-3 5/8"	1/4" x 22" x 1'-6 5/8"
FS-2	1/2" x 18" x 2'-7 1/2"	1/2" x 8 1/4" x 2'-7 1/2"	5/8" x 28" x 3'-7 1/2"	5/8" x 13 1/4" x 3'-7 1/2"	1/2" x 19 1/2" x 6'-1 1/2"	3/4" x 18" x 1'-3 5/8"	1/4" x 28" x 1'-9 5/8"
FS-3	1/2" x 18" x 2'-1 1/2"	1/2" x 8 1/4" x 2'-1 1/2"	5/8" x 28" x 3'-7 1/2"	5/8" x 13 1/4" x 3'-7 1/2"	1/2" x 19 1/2" x 6'-1 1/2"	N/A	N/A
FS-4	1/2" x 18" x 2'-7 1/2"	1/2" x 8 1/4" x 2'-7 1/2"	5/8" x 28" x 3'-7 1/2"	5/8" x 13 1/4" x 3'-7 1/2"	1/2" x 19 1/2" x 6'-1 1/2"	3/4" x 18" x 1'-3 5/8"	1/4" x 28" x 1'-9 5/8"
FS-5	1/2" x 18" x 2'-7 1/2"	1/2" x 8 1/4" x 2'-7 1/2"	5/8" x 22" x 3'-1 1/2"	5/8" x 10 1/4" x 3'-1 1/2"	1/2" x 19 1/2" x 6'-1 1/2"	3/4" x 18" x 1'-3 5/8"	1/4" x 22" x 1'-6 5/8"

NOTE:
See Sht. S-37 for notes.