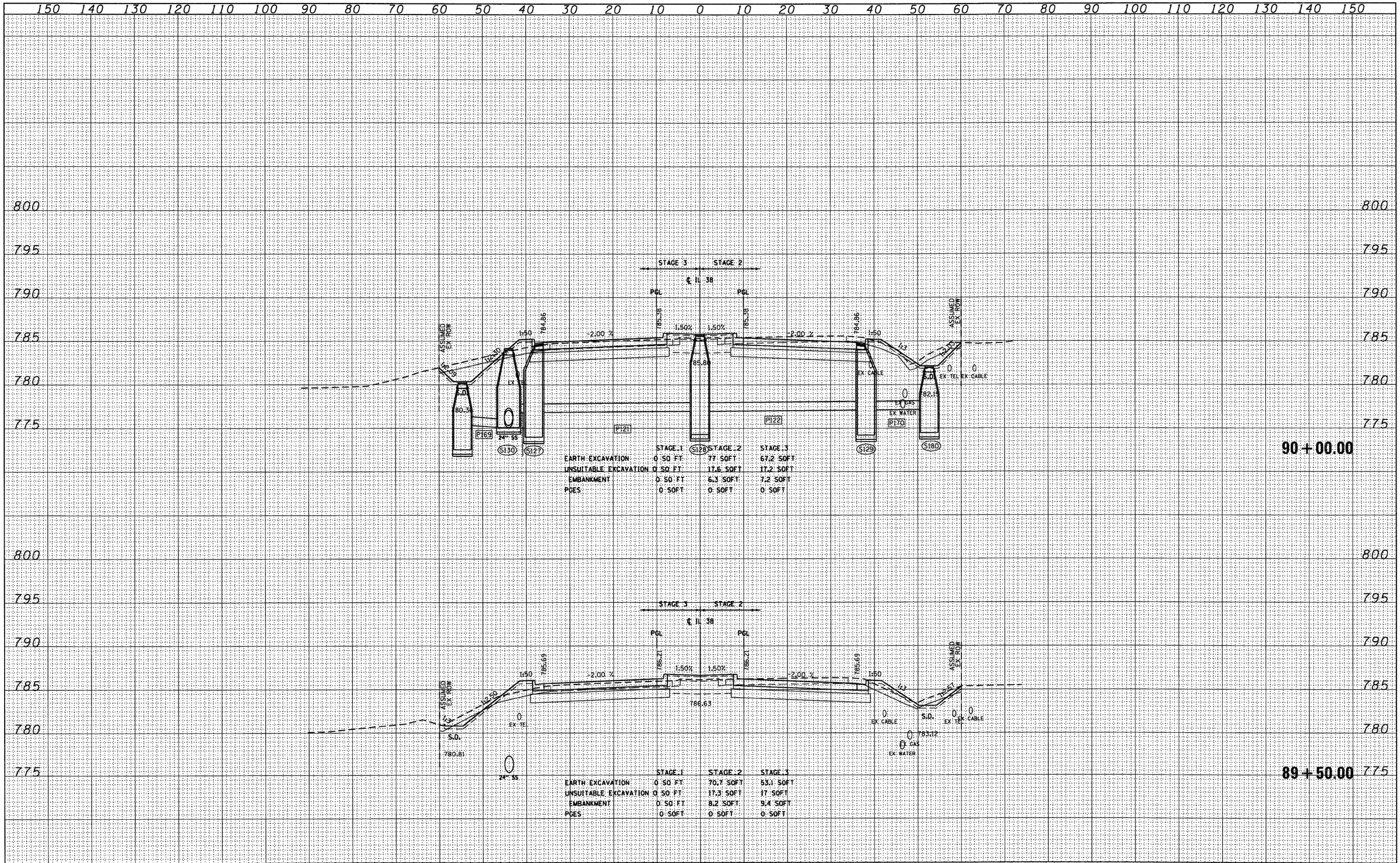

	STAGE 1	STAGE 2	STAGE 3
EARTH EXCAVATION	0 SQ FT	77 SQFT	67.2 SQFT
UNSUITABLE EXCAVATION	0 SQ FT	17.6 SQFT	17.2 SQFT
EMBANKMENT	0 SQ FT	6.3 SQFT	7.2 SQFT
PGES	0 SQFT	0 SQFT	0 SQFT

	STAGE 1	STAGE 2	STAGE 3
EARTH EXCAVATION	0 SQ FT	70.7 SQFT	53.1 SQFT
UNSUITABLE EXCAVATION	0 SQ FT	17.3 SQFT	17 SQFT
EMBANKMENT	0 SQ FT	8.2 SQFT	9.4 SQFT
PGES	0 SQFT	0 SQFT	0 SQFT

FINAL SURVEY	BY	DATE
SURVEYED		
PLOTTED		
TEMPLATE		
AREAS		
AREAS CHECKED		
NOTE BOOK		
NO.		

ORIGINAL SURVEY	BY	DATE
SURVEYED		
PLOTTED		
TEMPLATE		
AREAS		
AREAS CHECKED		
NOTE BOOK		
NO.		

FILE NAME = D160122-SHT-XSSHT01.dgn

USER NAME = YKim	DESIGNED - MJT	REVISED -
	DRAWN - MJT	REVISED -
PLOT SCALE = 1:10	CHECKED - EJG	REVISED -
PLOT DATE = 10/14/2011	DATE -	REVISED -

STATE OF ILLINOIS
DEPARTMENT OF TRANSPORTATION

IL ROUTE 38 CROSS SECTIONS

SCALE: 1"=10' H; 1"=5' V | SHEET NO. 13 OF 152 SHEETS | STA. 89+50.00 TO STA. 90+00.00

F.A. RTE.	SECTION	COUNTY	TOTAL SHEETS	SHEET NO.
			421	256
	XS-38-13	CONTRACT NO.		
		ILLINOIS FED. AID PROJECT		