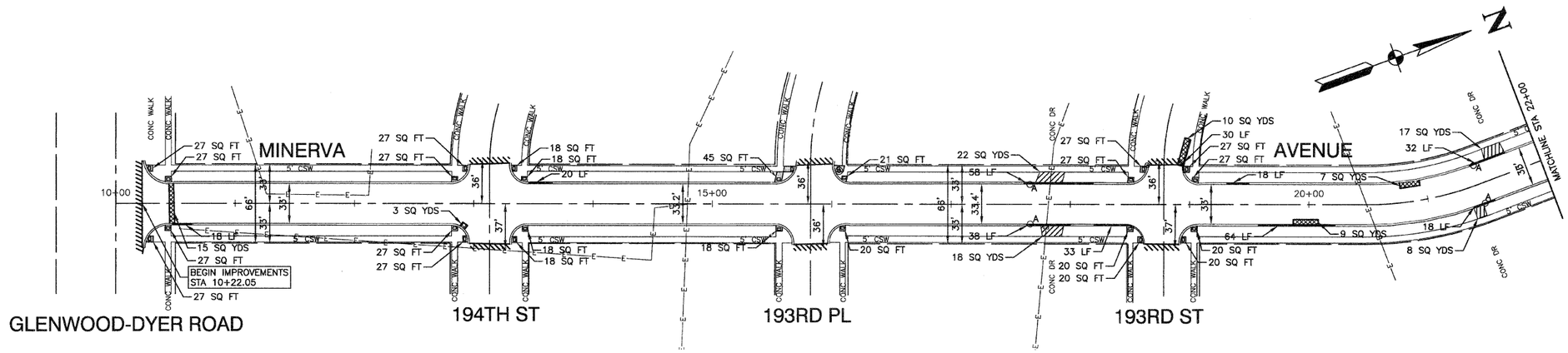

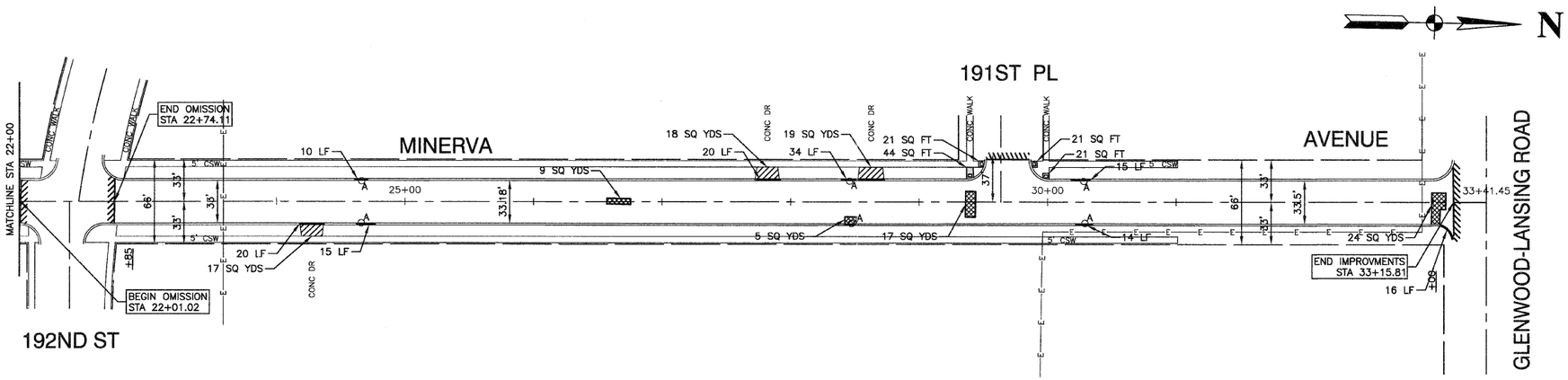

NOTES:

1. DETECTABLE WARNINGS ARE TO BE INSTALLED AT LOCATIONS OF SIDEWALK REMOVAL AND REPLACEMENT. CONTRACTOR TO POSITION AND PLACE DETECTABLE WARNINGS AT THE DIRECTION OF THE ENGINEER IN ACCORDANCE WITH ADA REQUIREMENTS.
2. LIMIT OF CONSTRUCTION ON ALL SIDE STREETS IS THE RADIUS RETURN PLUS 10' BUTT JOINT OR ROW AS NOTED.
3. ACCESS TO ALL DRIVEWAYS SHALL BE MAINTAINED UPON COMPLETION OF EACH WORKDAY. RESIDENTS SHALL BE NOTIFIED 24 HOURS IN ADVANCE OF WHEN DRIVEWAY REPLACEMENT WILL TAKE PLACE.

LEGEND

- CLASS D PATCH
- HMA DRIVEWAY REMOVAL AND REPLACEMENT
- CONCRETE DRIVEWAY REMOVAL AND REPLACEMENT
- CONCRETE SIDEWALK REMOVAL AND REPLACEMENT
- BUTT JOINTS
- CURB REMOVAL AND REPLACEMENT
- "A" — CATCH BASIN TO BE ADJUSTED, MANHOLE TO BE ADJUSTED, VALVE BOX TO BE ADJUSTED, FRAME & LID TO BE ADJUSTED (SPECIAL)
- DETECTABLE WARNINGS

FILE NAME = 11426-plan-01 - IDOT P01	USER NAME =	DESIGNED — DWS	REVISED —	STATE OF ILLINOIS DEPARTMENT OF TRANSPORTATION	MINERVA AVENUE MINERVA AVENUE RESURFACING PAVEMENT PLAN	F.A.U RTE.	SECTION	COUNTY	TOTAL SHEETS	SHEET NO.
		CHECKED — JH/PB	REVISED —			1071	11-00053-00-RS	COOK	9	4
	PLOT SCALE =	DRAWN — MED	REVISED —					CONTRACT NO. 63678		
	PLOT DATE = 1-31-12	CHECKED — AG	REVISED —		SCALE: 1"=50' / SHEET NO. 4 OF 9 SHEETS / STA. 10+22.05 TO STA. 33+15.81	FED. ROAD DIST. NO. 1	ILLINOIS	FED. AID PROJECT M-9003(905)		