BENCHMARKS:

BM 1 PAINTED SQUARE ON NORTHEAST WINGWALL
ON S.N. 086-0505, ELEV. 488.13.
BM 2 PAINTED SQUARE ON SOUTHEAST WINGWALL
ON S.N. 086-0505, ELEV. 489.52.

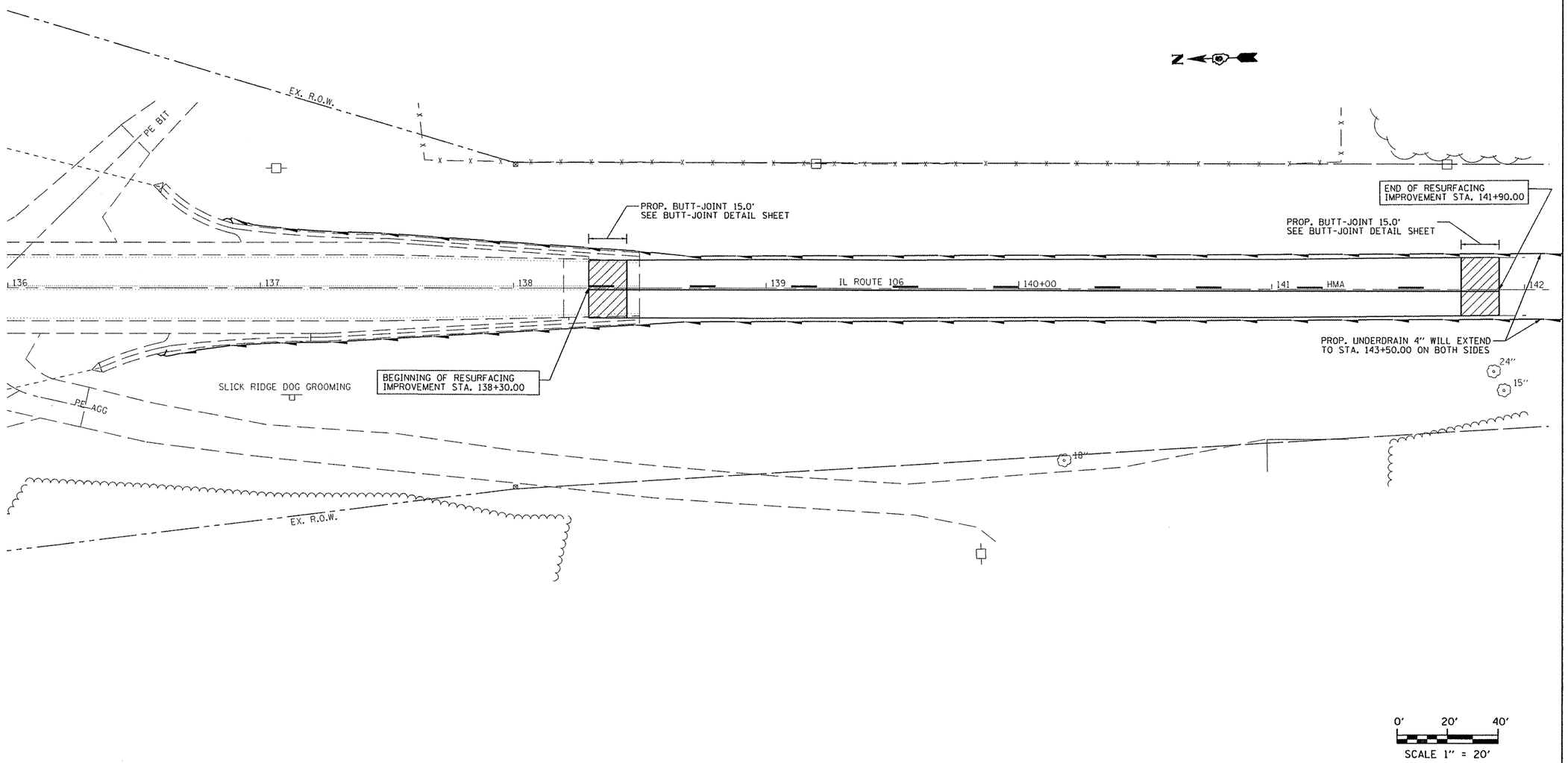

FILE NAME = c:\pw_work\pwidot\sparksgw\d0290642\D672F20-sht-plan1.dgn	USER NAME = sparksgw	DESIGNED -	REVISED -	STATE OF ILLINOIS DEPARTMENT OF TRANSPORTATION	PLAN SHEET	F.A.P. RTE.	SECTION	COUNTY	TOTAL SHEETS	SHEET NO.
		DRAWN -	REVISED -			566	(1-NRHMI)	SCOTT	9	7
	PLOT SCALE = 40.0000 ' / in.	CHECKED -	REVISED -					CONTRACT NO. 72F20		
	PLOT DATE = Feb-06-2012 01:45:38PM	DATE -	REVISED -		SCALE: SHEET OF SHEETS STA. TO STA.			ILLINOIS FED. AID PROJECT		