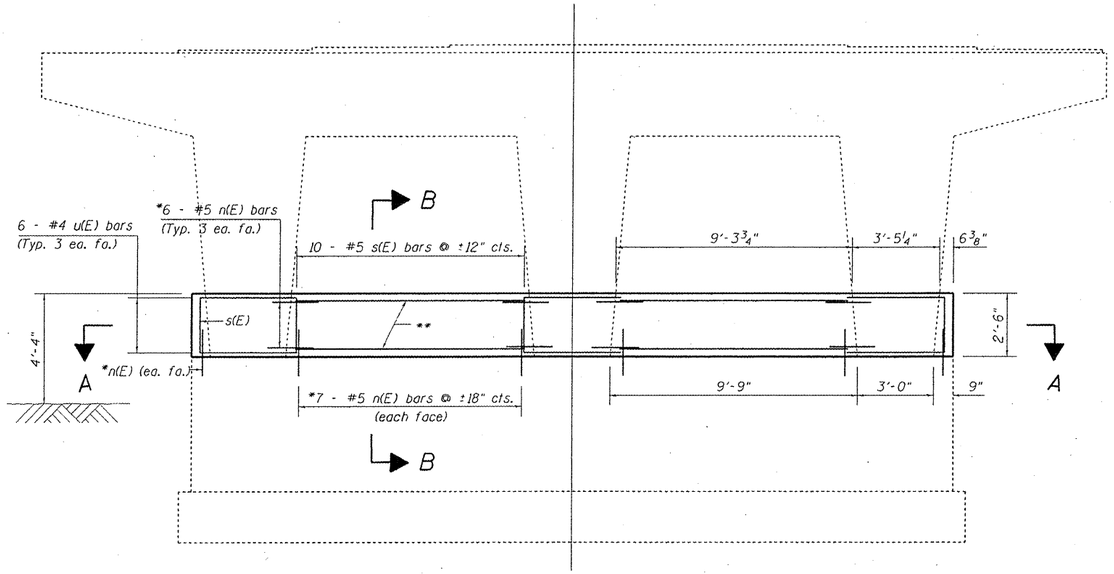

ELEVATION

Reinforcement Details typical at all locations.

* Epoxy grout n(E) bars in 9" min. holes according to Article 584 of the Standard Specifications.

** 7 - #5 h(E) bars For locations see section B-B.

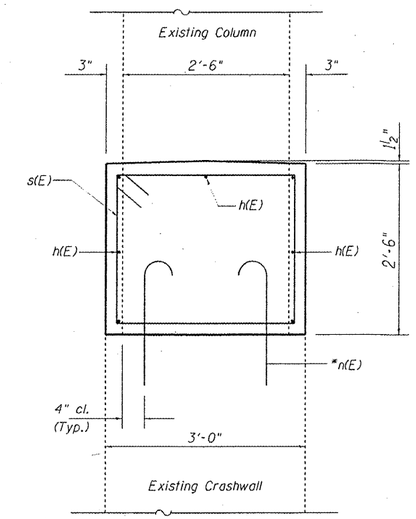

SECTION B-B

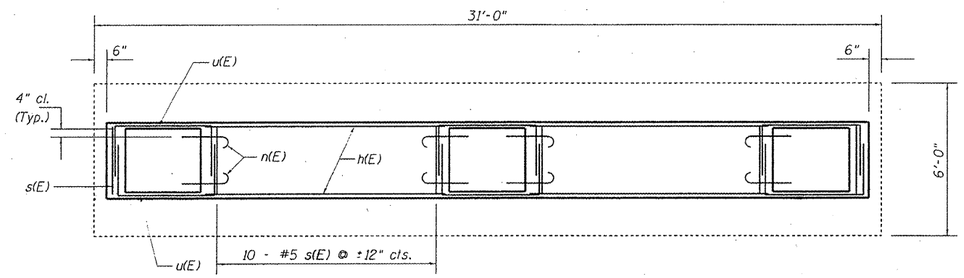

SECTION A-A

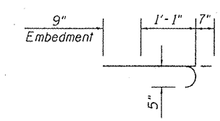

Bar n(E)

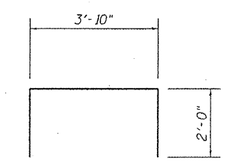

Bar u(E)

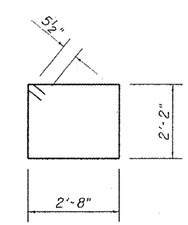

Bar s(E)

NOTES

The cost of epoxy grouting threaded rods shall be included with Reinforcement Bars, Epoxy Coated.

Plan dimensions and details relative to existing plans are subject to nominal construction variations. The Contractor shall field verify existing dimensions and details affecting new construction and make necessary approved adjustments prior to construction or ordering of materials. Such variations shall not be cause for additional compensation for a change in scope of work, however, the Contractor will be paid for the quantity actually furnished at the unit price bid for the work.

Reinforcement bars designated (E) shall be epoxy coated.

All unsound concrete on top surface of crashwall shall be removed prior to placing new concrete. The cost of this work shall be included in Concrete Structures.

LICENSED STRUCTURAL ENGINEER
DAVID CARL PUZEY
081-005470
SPRINGFIELD
ILLINOIS
STATE OF ILLINOIS

D. Carl Puzey 3/27/12
Expires 11/30/12

BILL OF MATERIAL

PER PIER (4 PIERS TOTAL)

BAR	TOTAL	SIZE	LENGTH	SHAPE
h (E)	14	#5	9'-0"	
n (E)	56	#5	2'-5"	
s (E)	22	#5	10'-7"	
u (E)	18	#4	7'-10"	
CONCRETE STRUCTURES			CU YD	6.1
REINFORCEMENT BARS, EPOXY COATED			POUND	610

FILE NAME : c:\pw_work\pwidot\steffenmk\d0289124\D74566-sht-brdetails-C250016i7.dgn	USER NAME : steffenmk	DESIGNED - KLB	REVISED -
		DRAWN - KLB	REVISED -
	PLOT SCALE : 40.0000 ' / in.	CHECKED - ADY	REVISED -
	PLOT DATE : 1/27/2012	DATE - 12/13/11	REVISED -

STATE OF ILLINOIS
DEPARTMENT OF TRANSPORTATION

PIER IMPROVEMENT DETAILS
SN. 025-0016 & 0017

SCALE: NA | SHEET 1 OF 2 SHEETS | STA. TO STA.

F.A.P. RTE.	SECTION	COUNTY	TOTAL SHEETS	SHEET NO.
828	12RS-1	Effingham	37	23

CONTRACT NO. 74566

ILLINOIS FED. AID PROJECT