Note: Horizontal dimensions in sections A-A & B-B are at right angles.

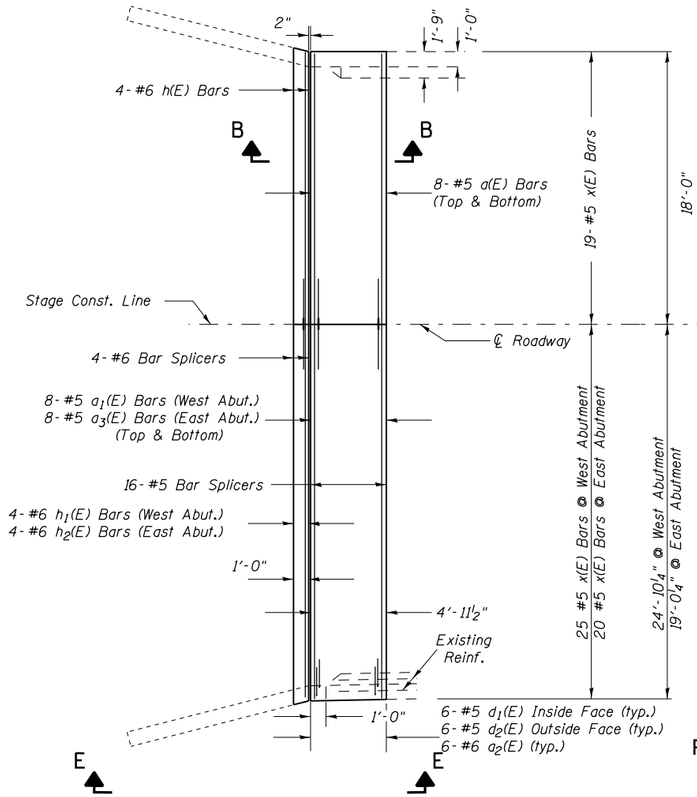

JOINT @ ABUTMENT PLAN
SHOWING NEW CONCRETE

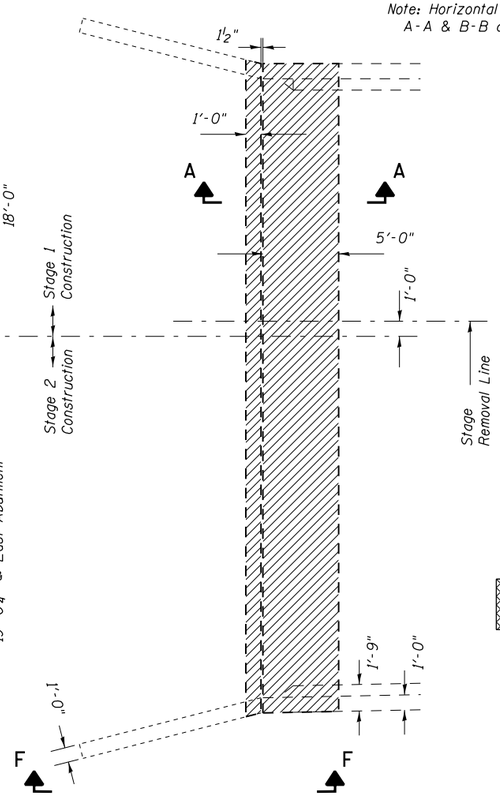

JOINT @ ABUTMENT PLAN
SHOWING CONCRETE REMOVAL

Concrete Removal

* Varies from 1'-4¼" to 1'-8½" at west abutment on EBDL.
Varies from 1'-5¾" to 1'-8½" at east abutment on EBDL.
Varies from 1'-6" to 1'-8½" at both abutments on EBPL.

Dimensions are based on a rolled rails strip seal joint. If the contractor elects to use welded rail strip seal joint. Deck dimensions may require adjustments to satisfy the details on base sheet EJ-SSJ.

Cost of removing the existing HMA surface course and waterproof membrane system included in the cost of CONCRETE REMOVAL.

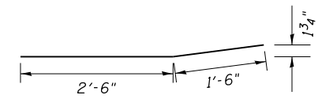

Bar a2(E)

$d_4(E)$ bars shall be installed 9" into the bottom parapet before the concrete pour.

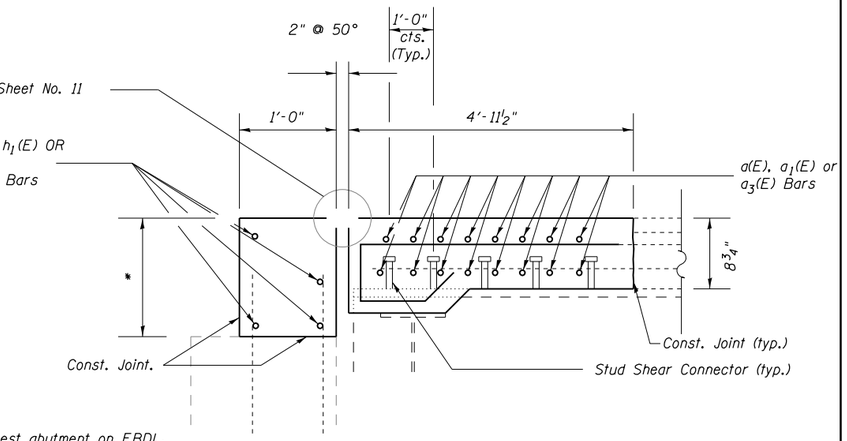

SECTION B-B

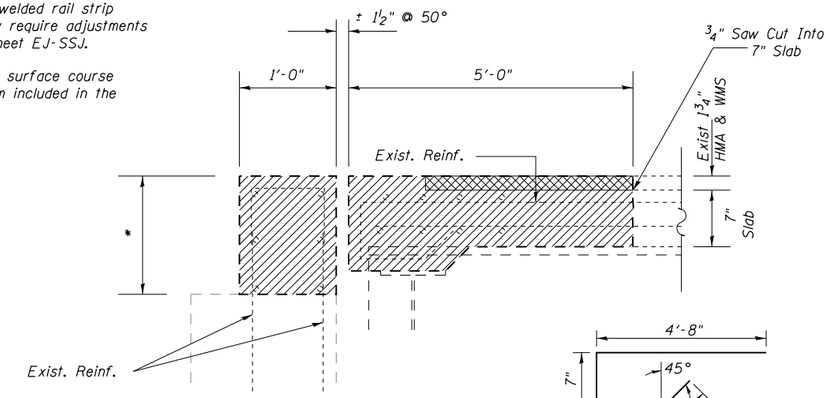

SECTION A-A

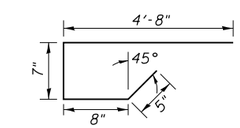

BAR x(E)

** ±4'-10½" S.W. WW West Abut.
±5'-0¾" N.W. WW West Abut.
±4'-11¼" S.E. WW East Abut.
±4'-10½" N.E. WW East Abut.

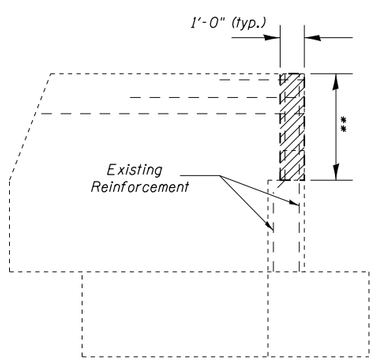

VIEW E-E
SHOWING CONCRETE
REMOVAL

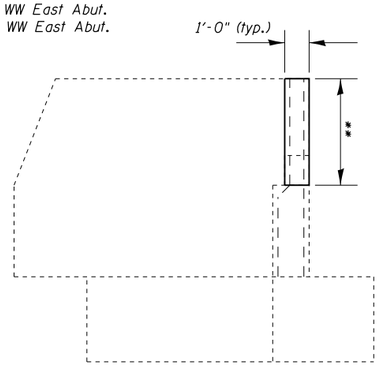

VIEW F-F
SHOWING CONCRETE
SUPERSTRUCTURES

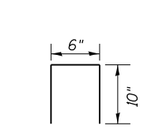

Bar d3(E)

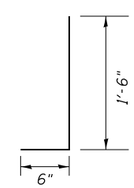

Bar d4(E)

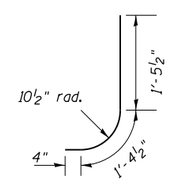

Bar d1(E)

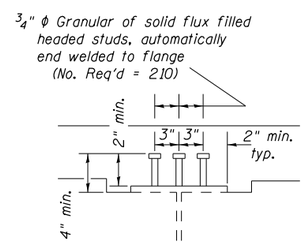

STUD SHEAR
CONNECTORS

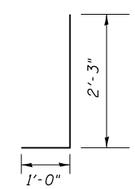

Bar d2(E)

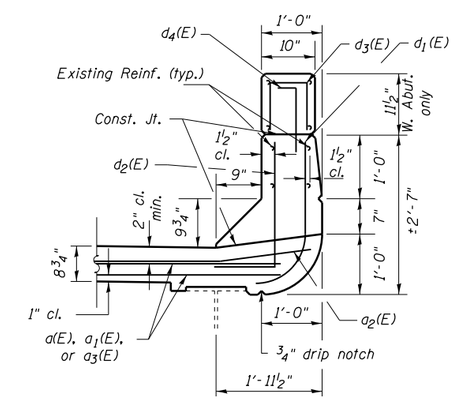

SECTION THROUGH
PARAPET

BILL OF MATERIAL

097-0001				
BAR	NO.	SIZE	LENGTH	SHAPE
a (E)	32	5	17'-4"	
a1(E)	16	5	24'-3"	
a2(E)	24	6	4'-0"	
a3(E)	16	5	18'-4"	
d1(E)	24	5	3'-2"	
d2(E)	24	5	3'-3"	
d3(E)	10	4	2'-2"	
d4(E)	12	5	2'-0"	
h (E)	8	6	16'-8"	
h1(E)	4	6	23'-6"	
h2(E)	4	6	17'-8"	
x (E)	83	5	6'-4"	
CONCRETE SUPERSTRUCTURE			CU YD	18.3
CONCRETE REMOVAL			CU YD	16.9
REINFORCEMENT BARS EPOXY COATED			POUND	2630

FILE NAME = c:\pw_work\pwidot\overturfnd\d825321\78254_part-rep-sht.dgn

USER NAME = $USER$	DESIGNED -	REVISED -	
	DRAWN -	REVISED -	
PLOT SCALE = 9.0000 ' / in.	CHECKED -	REVISED -	
PLOT DATE = 2/3/2012	DATE -	REVISED -	

STATE OF ILLINOIS
DEPARTMENT OF TRANSPORTATION

JOINT REPLACEMENT DETAILS
SN 097-0001 (EB)

SCALE: SHEET NO. OF SHEETS STA. TO STA.

F.A.I. RTE.	SECTION	COUNTY	TOTAL SHEETS	SHEET NO.
64	D9 CM BRIDGE REP 2012-4	WHITE	13	8
		CONTRACT NO. 78254		
		ILLINOIS FED. AID PROJECT		