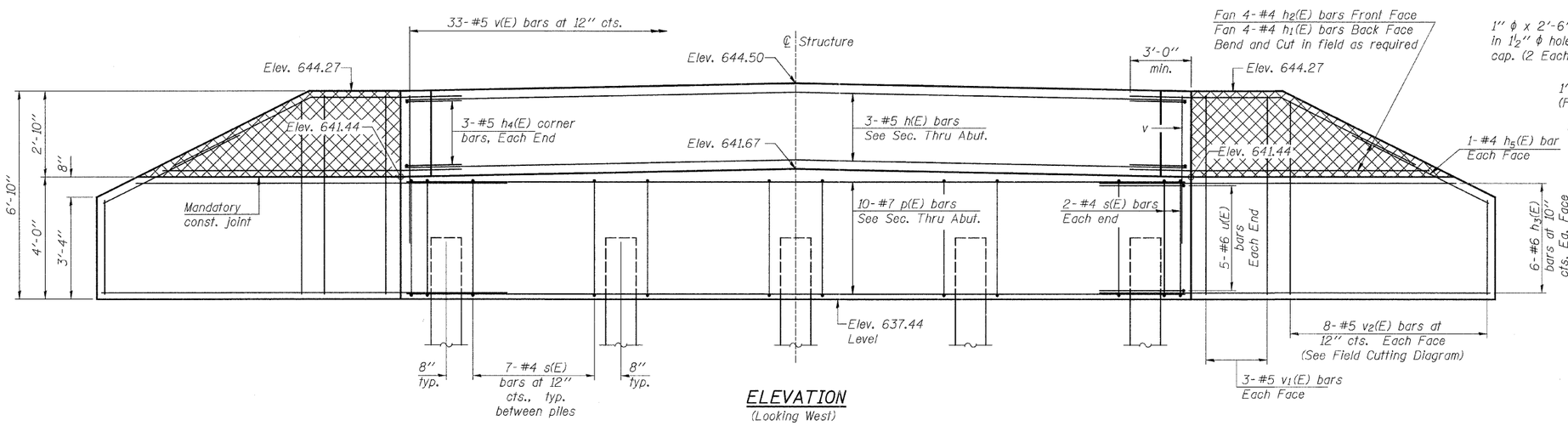

ELEVATION
(Looking West)

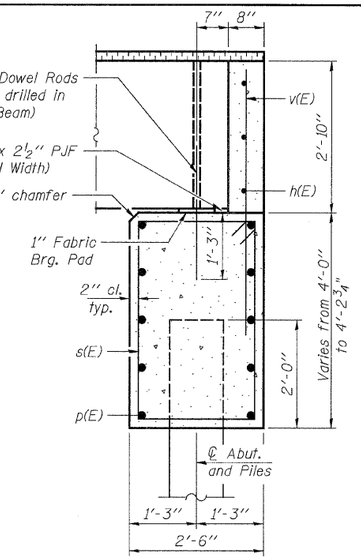

SECTION A-A

Z

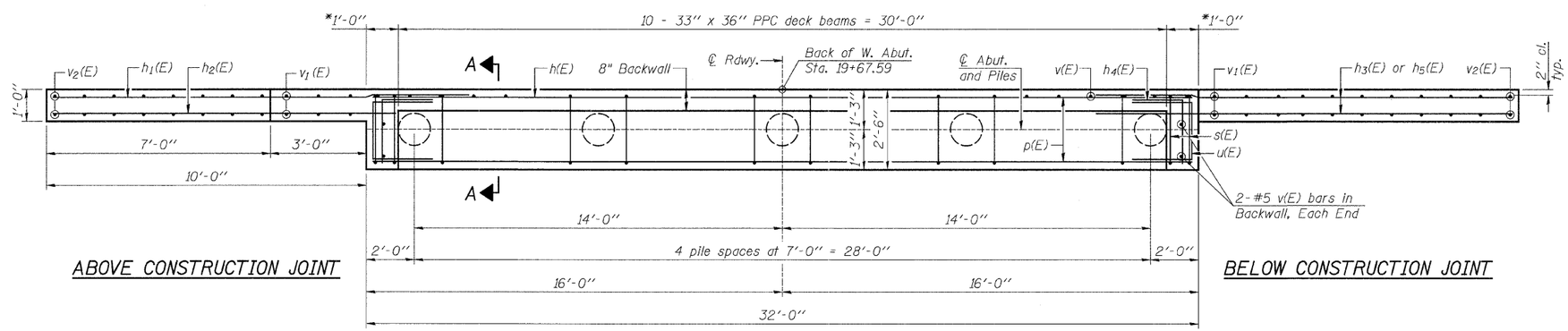

ABOVE CONSTRUCTION JOINT

BELOW CONSTRUCTION JOINT

PLAN

BILL OF MATERIAL

Bar	No.	Size	Length	Shape
h(E)	6	#5	31'-8"	
h1(E)	8	#4	11'-7"	
h2(E)	8	#4	9'-4"	
h3(E)	24	#6	14'-0"	
h4(E)	6	#5	4'-0"	
h5(E)	4	#4	4'-9"	
p(E)	10	#7	31'-8"	
s(E)	32	#4	12'-5"	
u(E)	10	#6	7'-1"	
v(E)	70	#5	4'-10"	
v1(E)	12	#5	6'-6"	
v2(E)	16	#5	9'-5"	
Structure Excavation		Cu. Yd.	122	
Concrete Structures		Cu. Yd.	19.0	
Reinforcement Bars, Epoxy Coated		Pound	2,290	
Furnishing Metal Shell Piles 12" x 0.250"		Foot	280	
Driving Piles		Foot	280	
Test Pile Metal Shells		Each	1	
Pile Shoes		Each	5	
** Porous Granular Embankment, Special		Ton	100	

PILE DATA

Type: Metal Shell 12" ϕ x 0.250" walls w/ Pile Shoes
Nominal Required Bearing: 349 kips
Factored Resistance Available: 192 kips
Est. Length: 70'
No. Production Piles: 4
No. Test Piles: 1

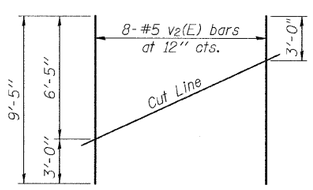

FIELD CUTTING DIAGRAM

Order v2(E) bars full length. Cut as shown and use remainder of bars in opposite face.

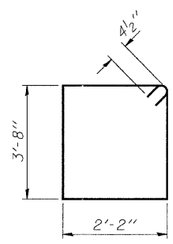

BAR s(E)

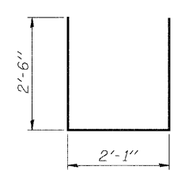

BAR u(E)

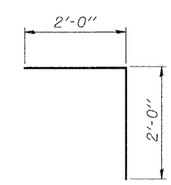

BAR h4(E)

NOTES:

Hatched portion of wingwalls to be poured with the backwall after the deck beams have been installed and grout has cured for a minimum of 24 hours.

All exposed edges shall have standard ¾" chamfers, except as noted.

Space reinforcement in cap to miss dowel rods.

After beams have been erected, holes shall be drilled into substructure and anchor dowels placed. Dowel holes shall be filled with non-shrink grout to top of beam and allowed to cure a min. of 24 hours prior to grouting the shear keys.

For pile details, see Structural Sheet 8 of 10.

*May vary due to overrun of beams.

**For Drainage Details, see Structural Sheet 2 of 10.

FILE = S:\Struct\1128d06\Bridge Drawings\1128D06_W_Abut.dgn

WILLETT HOFMANN & ASSOCIATES INC
ENGINEERING ARCHITECTURE LAND SURVEYING
809 EAST 2ND STREET, DIXON, IL 61021-0367
T: 815-284-3381 DESIGN FIRM: #184-000918

DESIGNED -	MICHAEL WAGNER	REVISED -	
CHECKED -	BRIAN CONVERSE	REVISED -	
DRAWN -	FRANK LACHAT	REVISED -	
CHECKED -	BRIAN CONVERSE	REVISED -	

MERCER COUNTY
F.A.S. 217 (C.H. 6) OVER MAIDS RUN
STATION 20+05

WEST ABUTMENT DETAILS
STRUCTURE NO. 066-3031

STRUCTURAL SHEET NO. 5 OF 10 SHEETS

F.A.S. RTE.	SECTION	COUNTY	TOTAL SHEETS	SHEET NO.
217	05-00096-00-BR	MERCER	21	12
	WHA# 1128D06	CONTRACT NO. 89432		
		ILLINOIS FED. AID PROJECT BRS-0217(102)		