DETAIL "B"
(NOT TO SCALE)

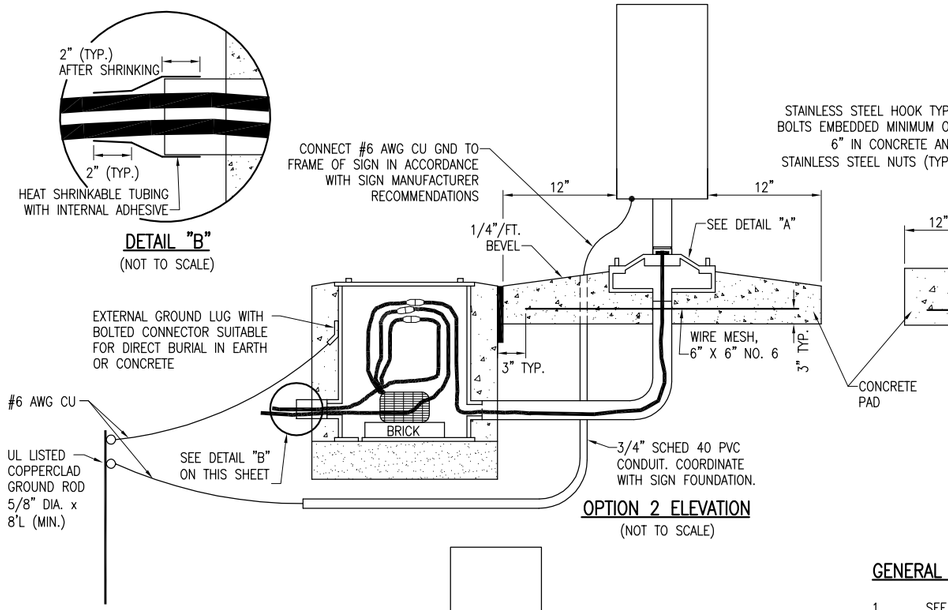

OPTION 2 ELEVATION
(NOT TO SCALE)

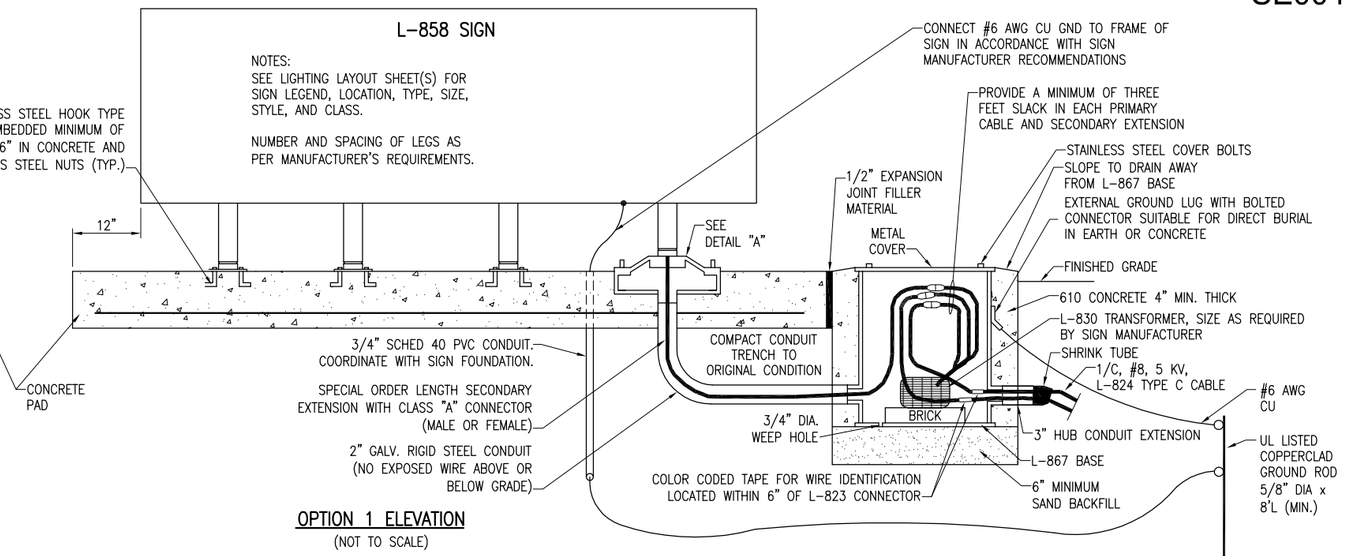

OPTION 1 ELEVATION
(NOT TO SCALE)

GENERAL NOTES:

1. SEE LIGHTING LAYOUT SHEET FOR SIGN LEGEND, LOCATION, TYPE, SIZE, STYLE, AND CLASS.
2. SEE ELECTRICAL NOTES SHEETS.

PER FAA AC 150/5340-30F DESIGN AND INSTALLATION DETAILS FOR AIRPORT VISUAL AIDS, A LIGHT BASE GROUND MUST BE INSTALLED AT EACH LIGHT FIXTURE. A LIGHT BASE GROUND SHALL BE INSTALLED AT EACH STAKE MOUNTED LIGHT AND EACH TRANSFORMER BASE/LIGHT CAN ASSOCIATED WITH RUNWAY LIGHTS, TAXIWAY LIGHTS, AND LIGHTED TAXI GUIDANCE SIGNS. THE LIGHT BASE GROUND SHALL BE A #6 AWG BARE COPPER CONDUCTOR CONNECTED TO THE GROUND LUG ON THE RESPECTIVE L-867 TRANSFORMER BASE/LIGHT CAN OR MOUNTING STAKE AND A ⅝-INCH DIAMETER BY 8-FOOT LONG (MINIMUM) UL LISTED COPPER CLAD GROUND ROD. ALSO BOND THE SIGN FRAME TO THE GROUND ROD WITH A #6 AWG BARE COPPER CONDUCTOR.

① EXISTING SOD TO BE STRIPPED AND REMOVED

② SAND BACKFILL, VARIABLE DEPTH

③ PROPOSED TOPSOIL BACKFILL MATERIAL

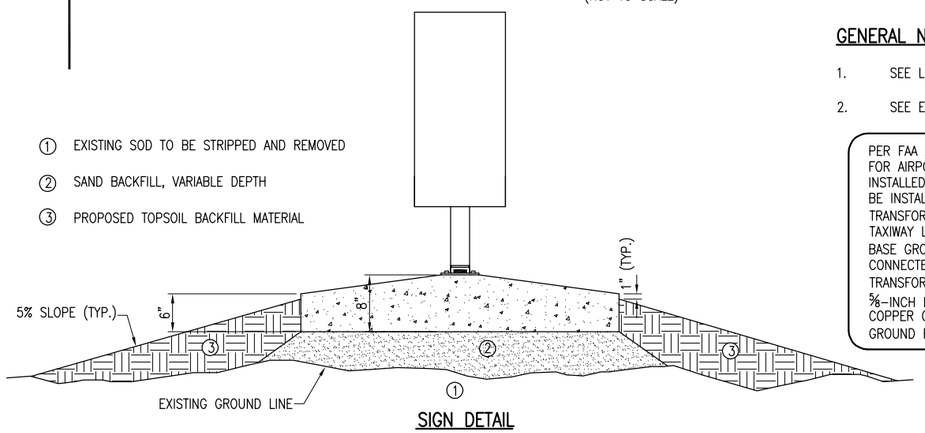

SIGN DETAIL
(NOT TO SCALE)

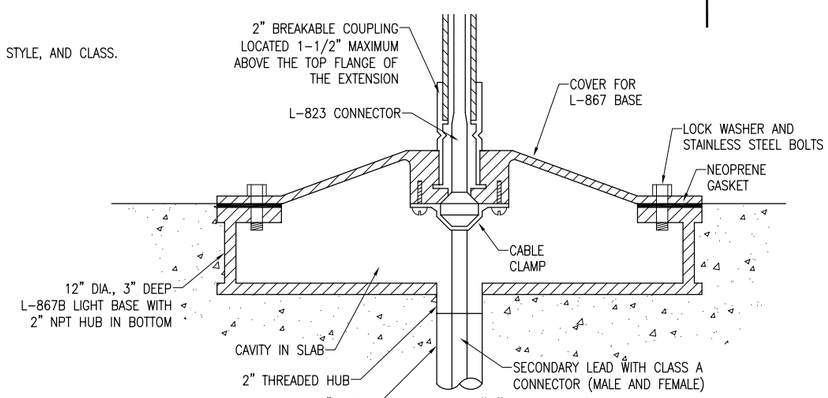

DETAIL "A"
(NOT TO SCALE)

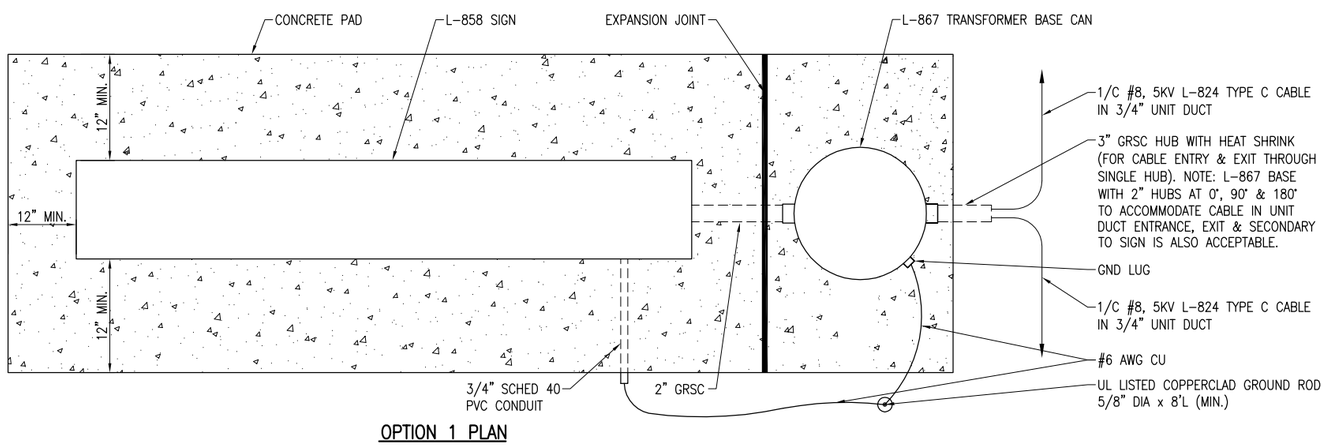

OPTION 1 PLAN
(NOT TO SCALE)

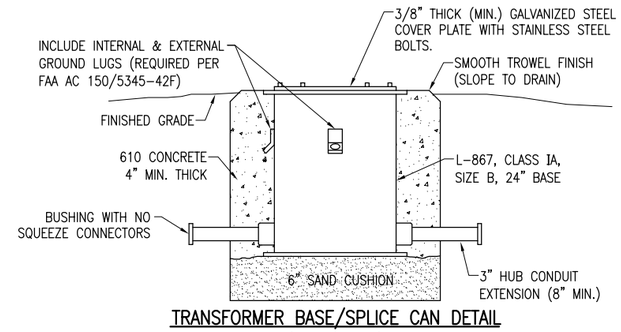

TRANSFORMER BASE/SPLICE CAN DETAIL
(NOT TO SCALE)

NOTE:
FOR THE PURPOSE OF ENHANCING SAFETY, EACH BASE MUST HAVE INSTALLED, BY THE MANUFACTURER, AN INTERNAL AND EXTERNAL GROUND STRAP THAT IS AVAILABLE FOR THE PURPOSE OF ATTACHING A GROUND LUG THAT IS CONNECTED TO AN EARTH GROUND OR A SAFETY GROUND CONDUCTOR INSTALLED WITH THE RESPECTIVE CIRCUIT. FOR AIRPORT PROJECTS RECEIVING FEDERAL FUNDS THIS REQUIREMENT IS MANDATORY PER FAA AC 150/5345-42F.

REVISION	DATE

SHELBY COUNTY AIRPORT
SHELBYVILLE, ILLINOIS

IL PROJ.: 2H0-4149 A.I.P. PROJ.: 3-17-0093-B11

Hanson Proj. No. 10A0047
Filename
Scale NOT TO SCALE
Date 02/18/12

LAYOUT	KNL	01/17/12
DRAWN	CWS	01/18/12
REVIEWED	CAH/KNL	02/23/12

HANSON

©Copyright Hanson Professional Services Inc. 2012
Hanson Professional Services Inc.
1525 South Sixth Street
Springfield, Illinois 62703-2886
Ph: (217) 788-2450 Fax: (217) 788-2503
www.hanson-inc.com
Offices Nationwide

CONSTRUCT VAULT, LIGHT TAXIWAY & INSTALL NAVAIDS

ELECTRICAL DETAILS
SHEET 3

MAR 09, 2012 1:49 PM KINCA00394
I:\10JOBS\10A0047\10A0047D\CAD\AIRPORT\SHEET\E-503.DWG