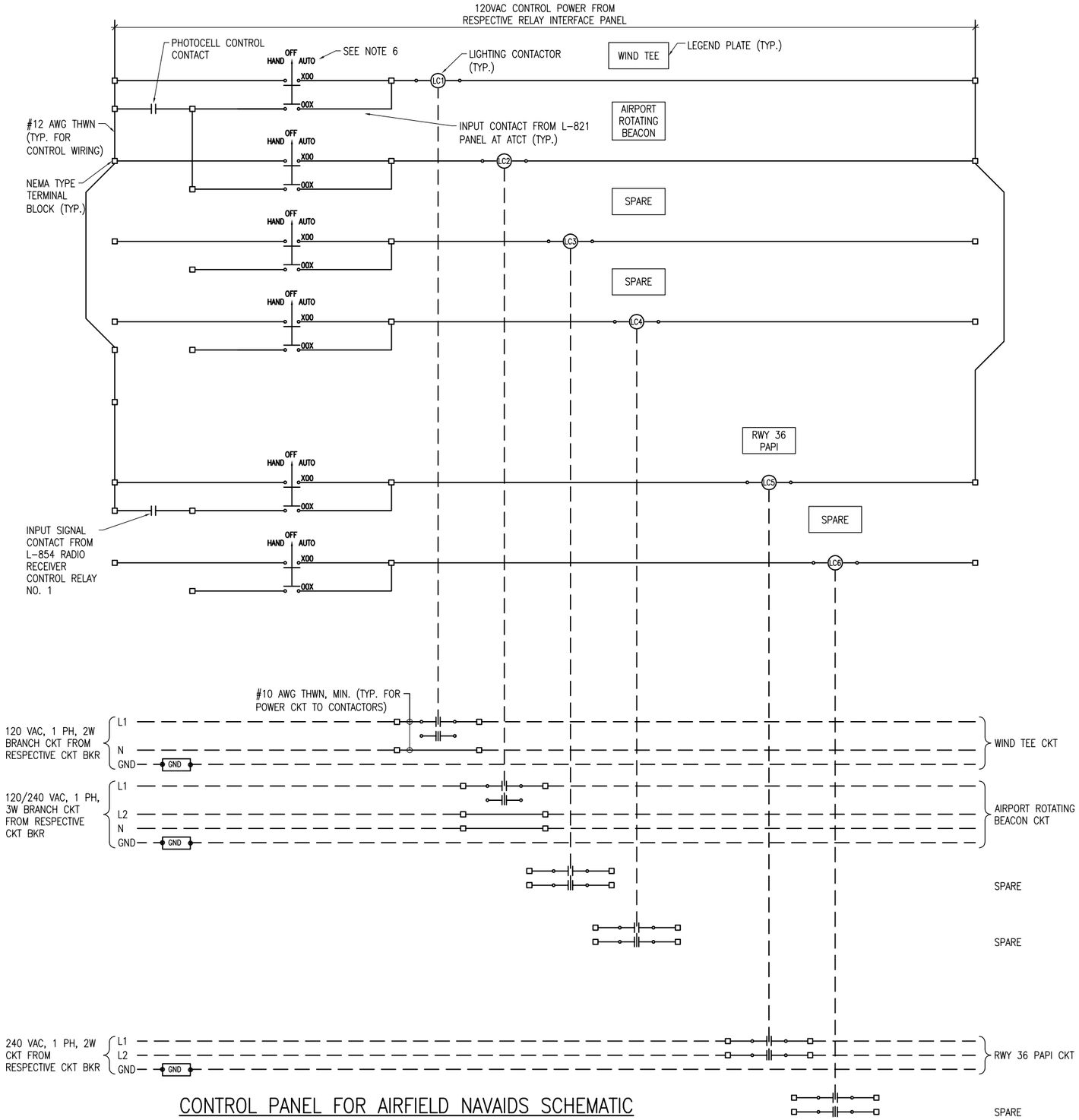

CONTROL PANEL FOR AIRFIELD NAVAIDS SCHEMATIC

NOTES

1. 15 AMP & 20 AMP INPUT POWER/BRANCH CIRCUITS SHALL BE #10 AWG COPPER THWN FROM THE RESPECTIVE POWER SOURCE TO THE LIGHTING CONTACTOR/RELAY PANEL. 25 AMP AND 30 AMP INPUT POWER/BRANCH CIRCUITS SHALL BE #8 AWG COPPER THWN (MIN.) FROM THE RESPECTIVE POWER SOURCE TO THE LIGHTING CONTACTOR/RELAY PANEL.
2. INPUT CONTROL CIRCUITS SHALL BE #12 AWG COPPER THWN.
3. FOR 120 VAC BRANCH CIRCUITS THE NEUTRAL CONDUCTOR SHALL NOT BE SWITCHED THROUGH THE RELAY CONTACTS. USE TERMINAL BLOCKS TO TRANSITION FROM VAULT BRANCH CIRCUIT WIRING TO FIELD WIRING.
4. THE AIRPORT ROTATING BEACON CIRCUIT SHALL HAVE PHASE "A" SWITCHED THROUGH THE LIGHTING CONTACTOR. PHASE "B" SHALL BE UNSWITCHED FROM THE POWER SOURCE TO THE LOAD CENTER AT THE AIRPORT ROTATING BEACON.
5. PROVIDE #10 AWG COPPER BONDING JUMPER FROM PANEL ENCLOSURE FRAME TO ENCLOSURE DOOR.
6. PROVIDE 3-POSITION MAINTAINED CONTACT "HAND-OFF-AUTO" SELECTOR SWITCH FOR EACH LIGHTING CONTACTOR & MOUNT ON LIGHTING CONTACTOR PANEL ENCLOSURE DOOR. SELECTOR SWITCH SHALL BE SQUARE D CLASS 9001, TYPE KS43FBH13, OR APPROVED EQUAL. INCLUDE LEGEND PLATE TO IDENTIFY THE DEVICE CONTROLLED (EX: "WIND CONE" OR "AIRPORT ROTATING BEACON").
7. FUSING FOR CONTROL WIRING SHALL BE 10 AMP, 600 VAC, BUSSMANN CATALOG FNQ-R-10, OR APPROVED EQUAL, WITH FUSE BLOCKS, WITH BOX LUG TERMINALS, SIZED AS REQUIRED FOR THE RESPECTIVE APPLICATION. INCLUDE HARDWARE FOR MOUNTING. PROVIDE ONE BOX (5 MINIMUM QUANTITY) OF EACH TYPE AND SIZE OF FUSE, UPON COMPLETION OF THE JOB FOR USE AS SPARES.

REVISION	DATE

SHELBY COUNTY AIRPORT
SHELBYVILLE, ILLINOIS

IL PROJ.: 2H0-4149 A.I.P. PROJ.: 3-17-0093-B11

Hanson Proj. No. 10A0047
Filename E-607.DWG
Scale NONE
Date 02/18/12

LAYOUT	KNL	12/15/11
DRAWN	CWS	01/18/12
REVIEWED	KNL/CAH	02/23/12

HANSON
© Copyright Hanson Professional Services Inc. 2012
Hanson Professional Services Inc.
1525 South Sixth Street
Springfield, Illinois 62703-2886
Ph: (217) 788-2450 Fax: (217) 788-2503
www.hanson-inc.com
Offices Nationwide

CONSTRUCT VAULT, LIGHT TAXIWAY & INSTALL NAVAIDS

LIGHTING CONTACTOR SCHEMATIC

MAR 09, 2012 2:02 PM KINCA00394
E:\10JOBS\10A0047\10A0047D\CAD\AIRPORT\SHEET\E-607.DWG