F.A.I. RTE.	SECTION	COUNTY	TOTAL SHEETS	SHEET NO.
57	*	COOK	916	583
STA.	TO STA.			
FED. ROAD DIST. NO.	ILLINOIS	FED. AID PROJECT		

CONTRACT NO. 62304
*(1516.1, 1717, & 1818) R-4

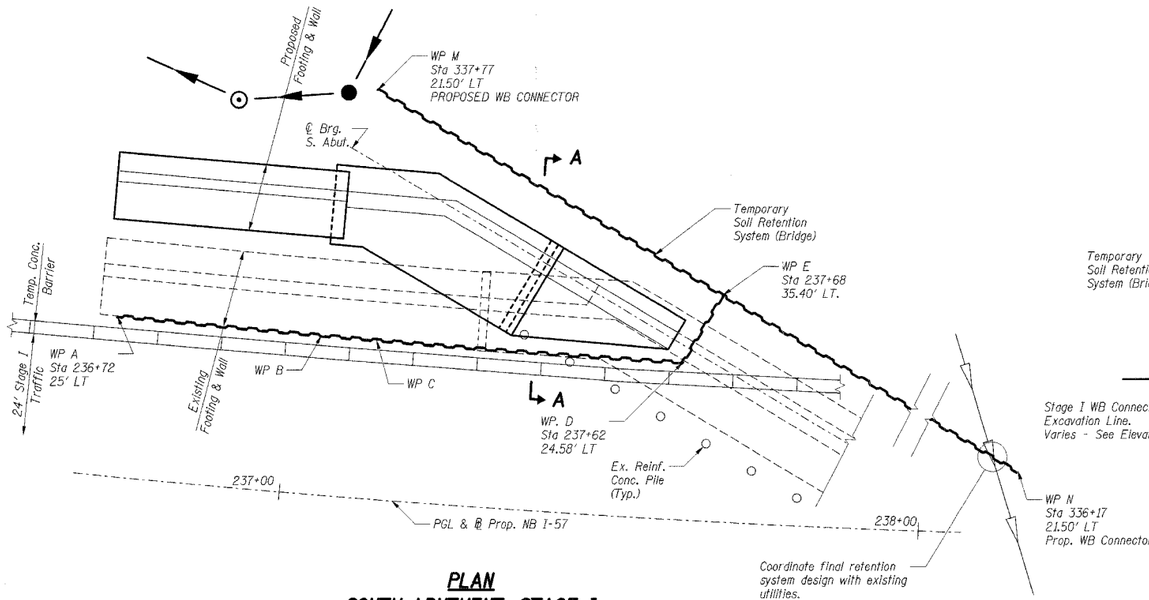

PLAN
SOUTH ABUTMENT, STAGE I

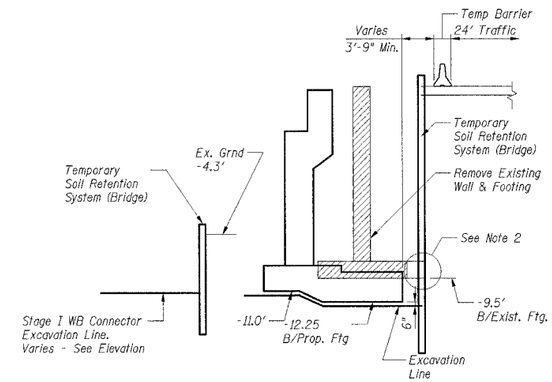

SECTION A-A

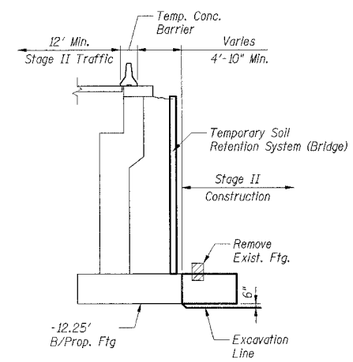

SECTION B-B

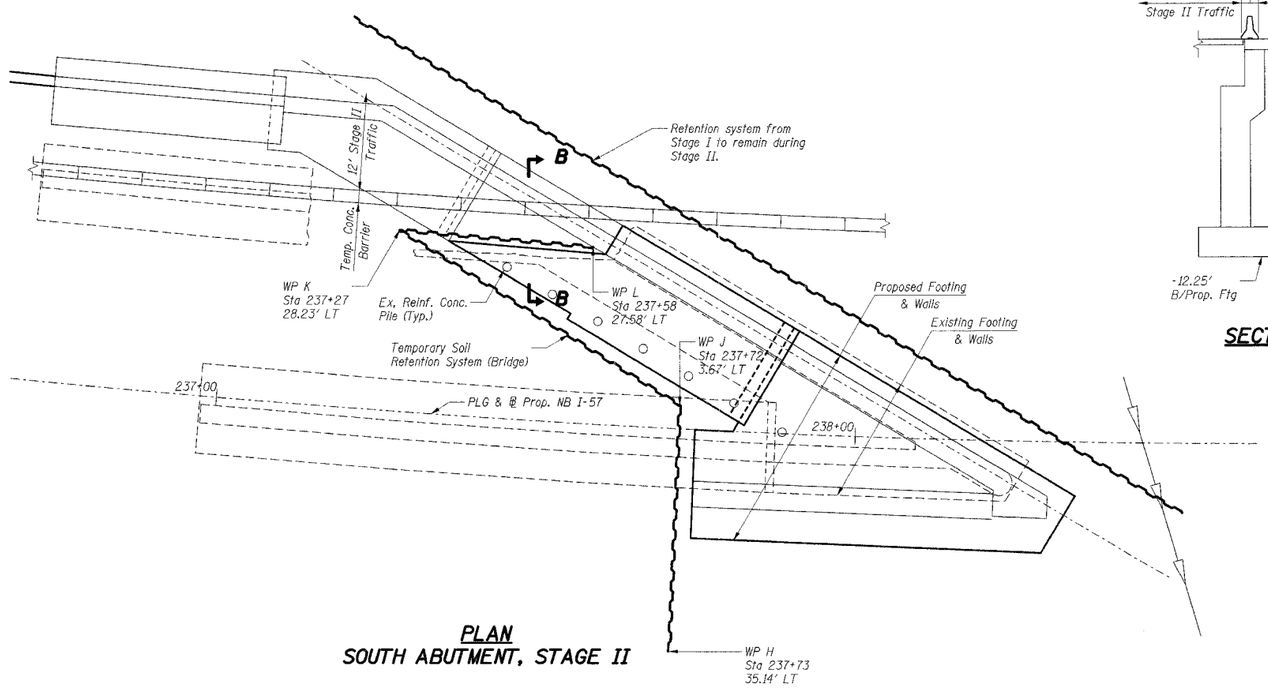

PLAN
SOUTH ABUTMENT, STAGE II

Legend:

- Removal of Existing Structures
- Existing buried sewer - Contract 62593
- Proposed buried sewer - This Contract

Notes:

1. A cantilevered sheet piling design does not appear feasible and additional members or other retention systems may be necessary. The Contractor shall submit a temporary soil retention system design including plan details and calculations for review and acceptance by the Engineer.
2. The Contractor shall anticipate interference of the existing footing heel within the available envelope for installation of the soil retention system.
3. For removal of existing structures, see Sht. S-004.
4. Work this sheet with Sht. S-007.
5. For buried utilities, coordinate with Drainage and Utility plans in this Contract and in IDOT Contract No. 62593.

BILL OF MATERIAL

Item	Unit	Total
Temporary Soil Retention System (Bridge)	Sq Ft	5231

SHT. S-006

REVISIONS	
NAME	DATE

ILLINOIS DEPARTMENT OF TRANSPORTATION
F.A.I. ROUTE 57 (INTERSTATE 57)
I-57 NB OVER WB CONNECTOR
SN 016-0072 OLD, SN 016-2852 NEW
STA. 238+73.54
COOK COUNTY, SECTION (1516.1, 1717, & 1818) R-4
TEMPORARY SOIL RETENTION SYSTEM
SOUTH ABUTMENT I

DATE: 03/07/06
DRAWN BY: TCU
CHECKED BY: VCP

TENG
TENG & ASSOCIATES, INC.
ENGINEERS/ARCHITECTS/PLANNERS
205 N. MICHIGAN AVE., CHICAGO, IL 60601
TELEPHONE: 312.616.0000

..\BRBORDER.DGN, ..\REMOOWW.DGN, ..\GPEOOWO.DGN, ..\REMOOWW.DGN, ..\REMOOWW.DGN, ..\REMOOWW.DGN, ..\REMOOWW.DGN
3-01-2006,15:19:09 \\FS-0001\PROJ_CVL\DOCUMENT\1930860\STRUCT\DGN\SPDOOYBE.DGN
UDETC