F.A.I. RTE.	SECTION	COUNTY	TOTAL SHEETS	SHEET NO.
57	*	COOK	916	587
STA.	TO STA.			
FED. ROAD DIST. NO.	ILLINOIS	FED. AID PROJECT		

CONTRACT NO. 62304
*(1516.1, 1717, & 1818) R-4

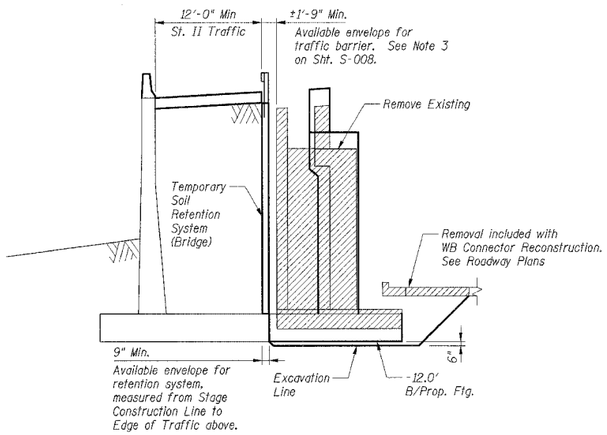

SECTION D-D

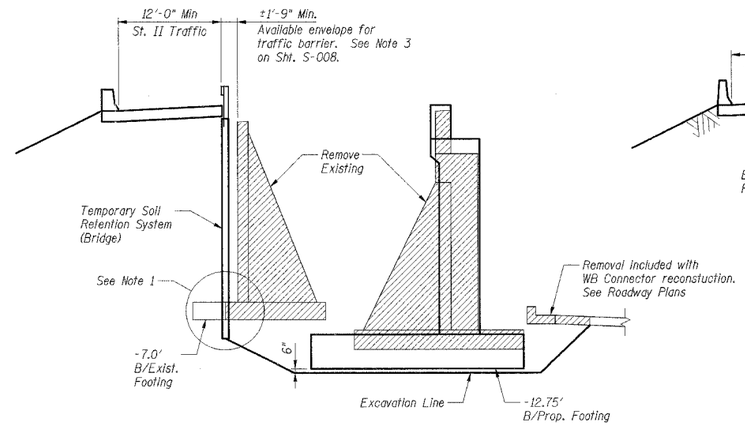

SECTION E-E

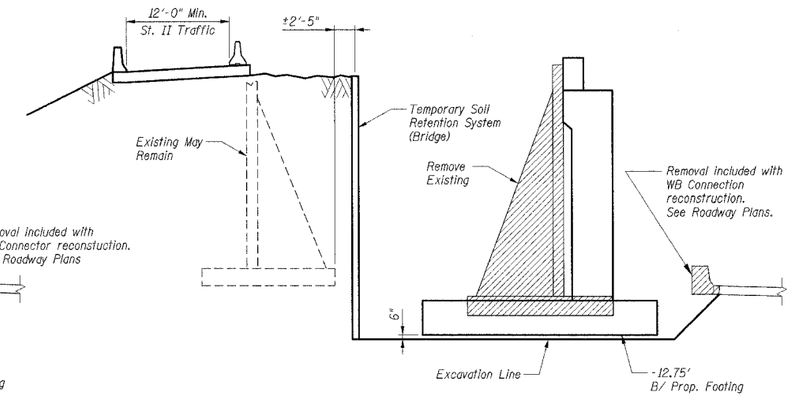

SECTION F-F

Legend:

Removal of Existing Structures

Notes:

1. The Contractor shall anticipate interference of the existing footing and counterforts within the recommended alignment of the soil retention system.
2. For removal of existing structures, see Sht. S-004.

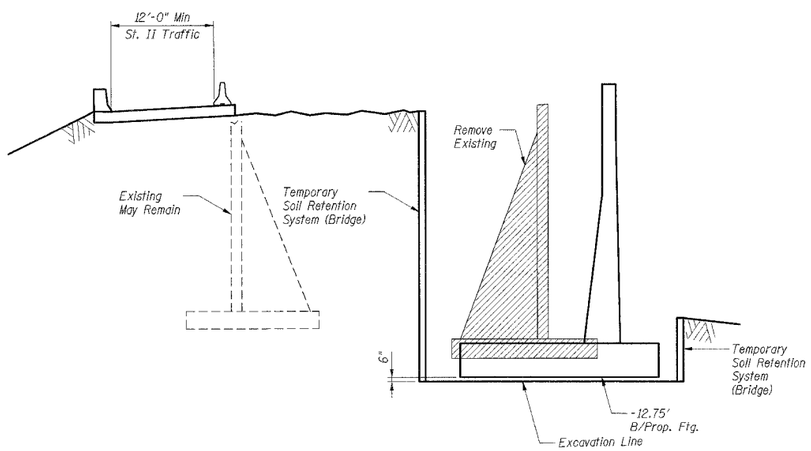

SECTION G-G

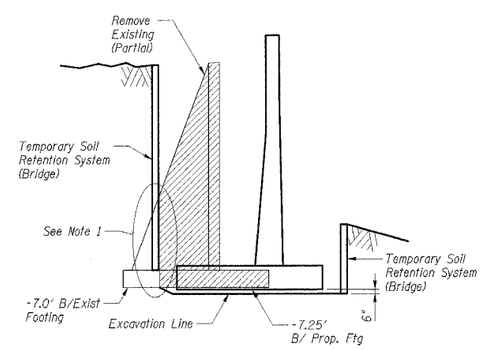

SECTION H-H

SHT. S-010

REVISIONS	
NAME	DATE

ILLINOIS DEPARTMENT OF TRANSPORTATION
F.A.I. ROUTE 57 (INTERSTATE 57)
I-57 NB OVER WB CONNECTOR
SN 016-0072 OLD, SN 016-2852 NEW
STA. 238+73.54
COOK COUNTY, SECTION (1516.1, 1717, & 1818) R-4

TEMPORARY SOIL RETENTION SYSTEM
NORTH ABUTMENT III

DATE: 03/07/06
DRAWN BY: TCU
CHECKED BY: VCP

TENG
TENG & ASSOCIATES, INC.
ENGINEERS/ARCHITECTS/PLANNERS
205 N. MICHIGAN AVE., CHICAGO, IL 60601
TELEPHONE: 312.616.0000

..\BRBORDER.DGN, ..\REMOOWW.DGN, ..\GPEOOWOJ.DGN, ..\REMOOWW.DGN, ..\REMOOWW.DGN, ..\REMOOWW.DGN, ..\REMOOWW.DGN
3-01-2006, 15:09:07 \\FS-0001\PROJ_CVL\DOCUMENT\1930860\STRUCT\DGN\SPD00Y8H.DGN UDETC