F.A.I. RTE.	SECTION	COUNTY	TOTAL SHEETS	SHEET NO.
57	*	COOK	916	615
STA.	TO STA.			
FED. ROAD DIST. NO.	ILLINOIS	FED. AID PROJECT		

CONTRACT NO. 62304
*(1516.1, 1717, & 1818) R-4

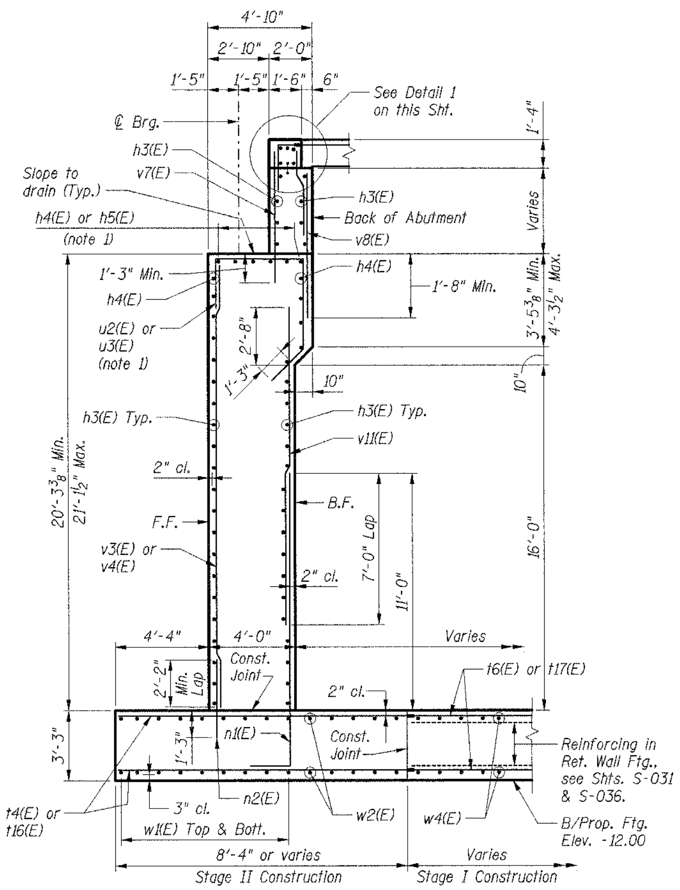

SECTION B-B

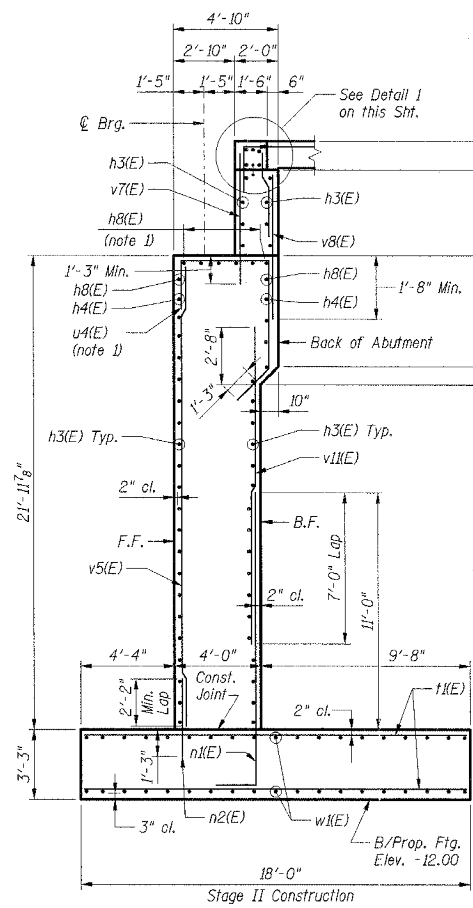

SECTION C-C

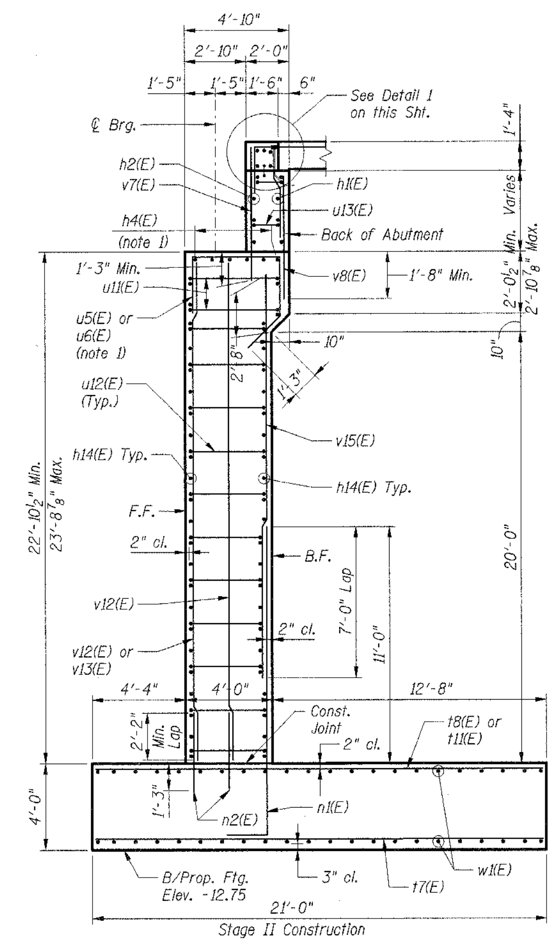

SECTION D-D

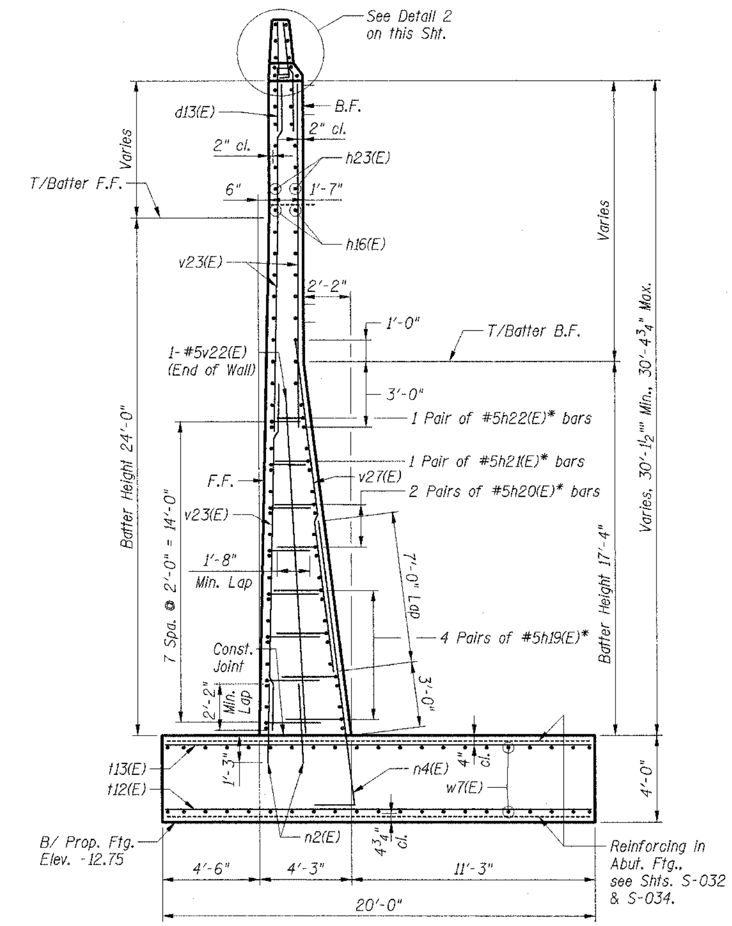

SECTION F-F

* Lap w/h16(E) bars (End of Wall)

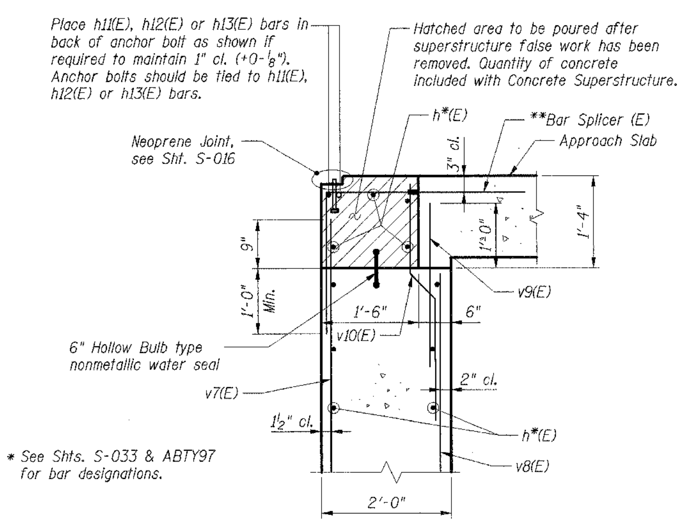

* See Shts. S-033 & ABTY97 for bar designations.

DETAIL 1

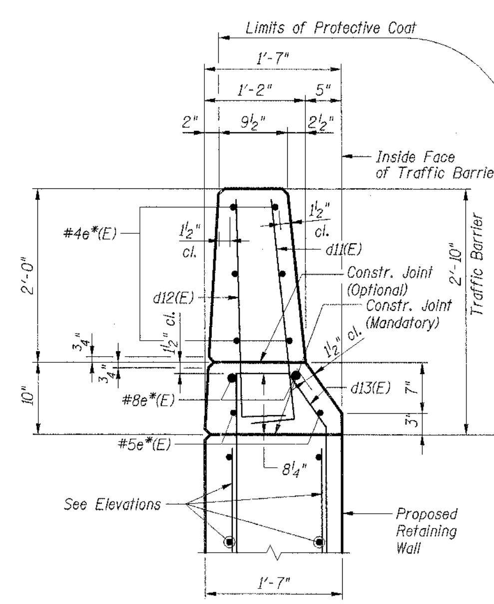

* For bar designations, see Retaining Wall Elevations

DETAIL 2

Notes:

1. Space reinforcement to miss anchor bolts.
2. Reinforcement bars designated (E) shall be epoxy coated.
3. F.F. denotes Front Face,
   B.F. denotes Back Face.
4. For Bar List & Bill of Material, see Sht. S-039.
5. Work this sheet with Shts. S-030 to S-039.
6. For additional reinforcement, see Sht. S-037.
7. For typical wall details, see Sht. S-040.

SHT. S-038

REVISIONS	
NAME	DATE

ILLINOIS DEPARTMENT OF TRANSPORTATION
F.A.I. ROUTE 57 (INTERSTATE 57)
I-57 NB OVER WB CONNECTOR
SN 016-0072 OLD, SN 016-2852 NEW
STA. 238+73.54
COOK COUNTY, SECTION (1516.1, 1717, & 1818) R-4

NORTH ABUTMENT DETAILS II

DATE: 03/07/06
DRAWN BY: FD
CHECKED BY: TCU

TENG
TENG & ASSOCIATES, INC.
ENGINEERS/ARCHITECTS/PLANNERS
205 N. MICHIGAN AVE., CHICAGO, IL 60601
TELEPHONE: 312.616.0000

..\XXX00Y7T.DGN, ..\XXX00Y7T.DGN, ..\ABD00Y92.DGN, ..\ABD00YBD.DGN, ..\BRBORDER.DGN, ..\ABD00YBD.DGN, ..\SUD00WE0.DGN, ..\XXX00Y7T.DGN, ..\XXX00Y7T.DGN, ..\XXX00Y7T.DGN, ..\ABT00W$F.DGN, ..\ABT00Y96.DGN, ..\ABT00Y96.DGN
3-01-2006, 15:18:42 \\FS-0001\PROJ_CVL\DOCUMENT\930860\STRUCT\DGN\ABD00YBD.DGN UDETC