F.A.I. RTE.	SECTION	COUNTY	TOTAL SHEETS	SHEET NO.
94	*	COOK	764	146
STA. 88+60 (SB I-57) 1126+91 (SB FORD)		TO STA. 1313+00 (SB RYAN)		
FED. ROAD DIST. NO.	ILLINOIS	FED. AID PROJECT		

* (1516.1, 1717, & 1818) R-5

62593

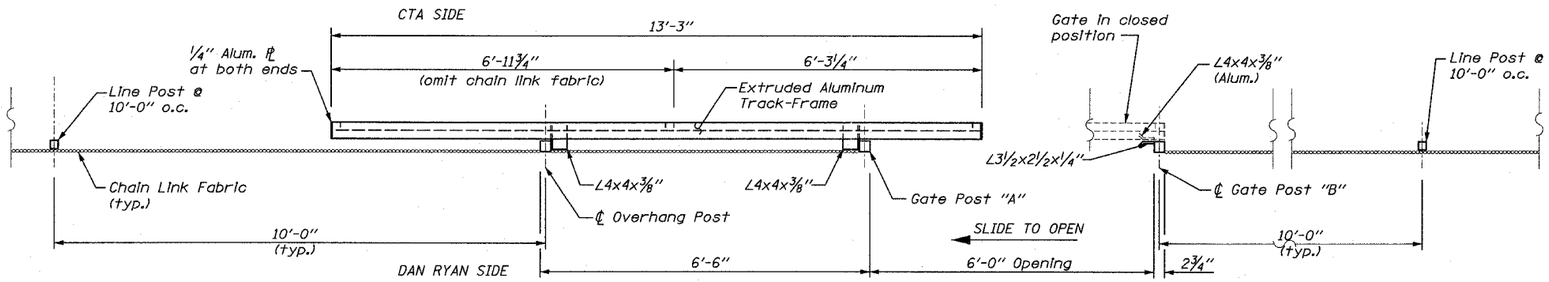

PLAN

(BARRIER WALL NOT SHOWN)

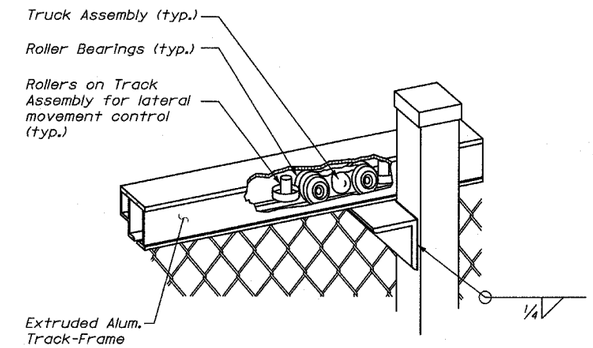

ROLLER BEARING TRUCK ASSEMBLY DETAIL

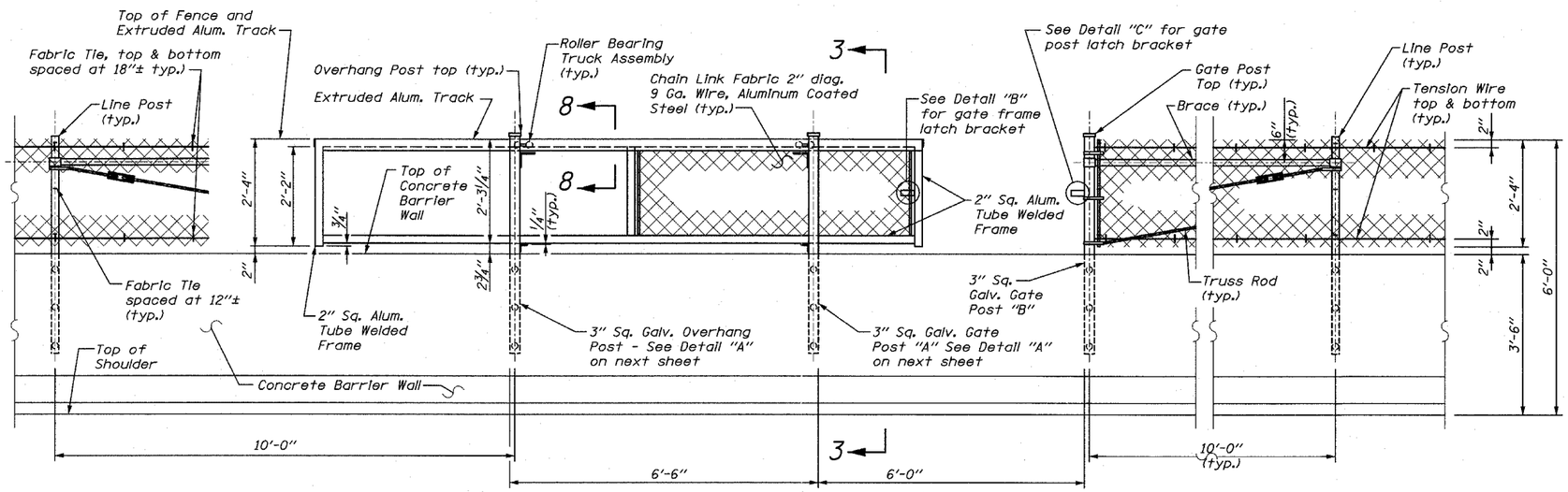

ELEVATION
CTA FENCE & CTA GATE

(FOOTING NOT SHOWN)

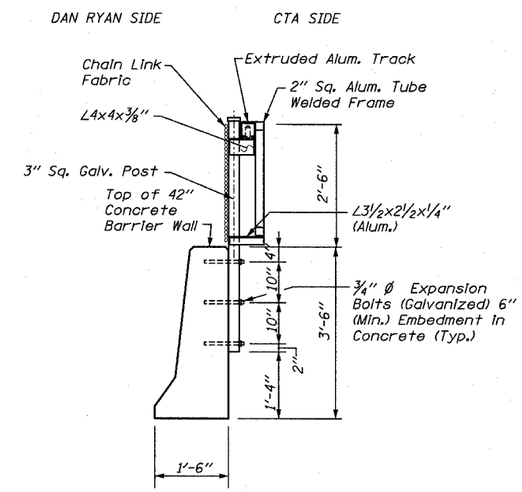

SECTION 3-3

REVISIONS	
NAME	DATE

ILLINOIS DEPARTMENT OF TRANSPORTATION

F.A.I. 94 (DAN RYAN EXPRESSWAY)

CTA FENCE
ELEVATIONS AND DETAILS
SHEET 3 OF 4

SCALE: NONE — DRAWN BY: RLK

DATE: MARCH 1, 2006 — CHECKED BY: EL

Edwards AND Kelcey
ONE NORTH FRANKLIN
CHICAGO, IL 60606
PHONE: (312) 251-3000
FAX: (312) 251-3015
WEB: WWW.EKCORP.COM