ROUTE NO.	SECTION	COUNTY	TOTAL SHEETS	SHEET NO.
78	(10BR-3)D & 11BR-8	JO DAVIESS	45	38
FED. ROAD DIST. NO. 7	ILLINOIS	FED. AID PROJECT-		

SHEET NO. 11
12 SHEETS

Contract # 64B27

STATE OF ILLINOIS
DEPARTMENT OF TRANSPORTATION

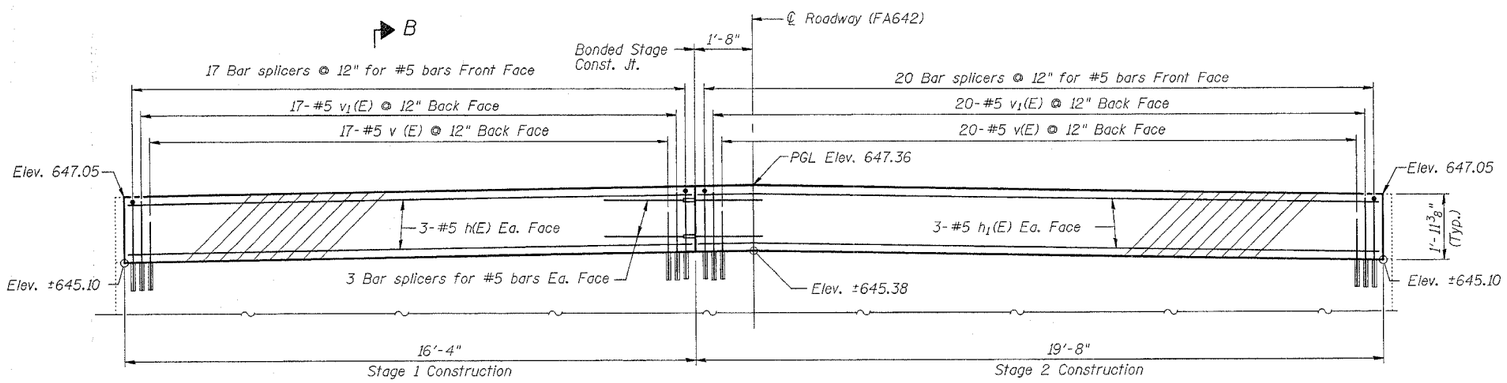

ELEVATION

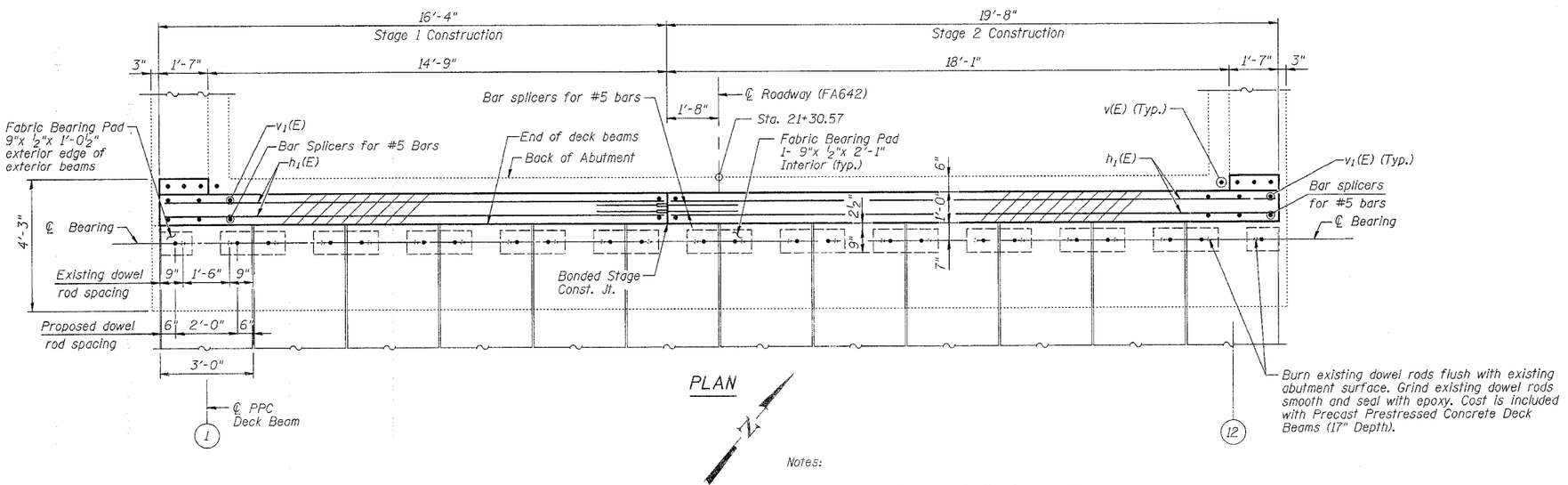

PLAN

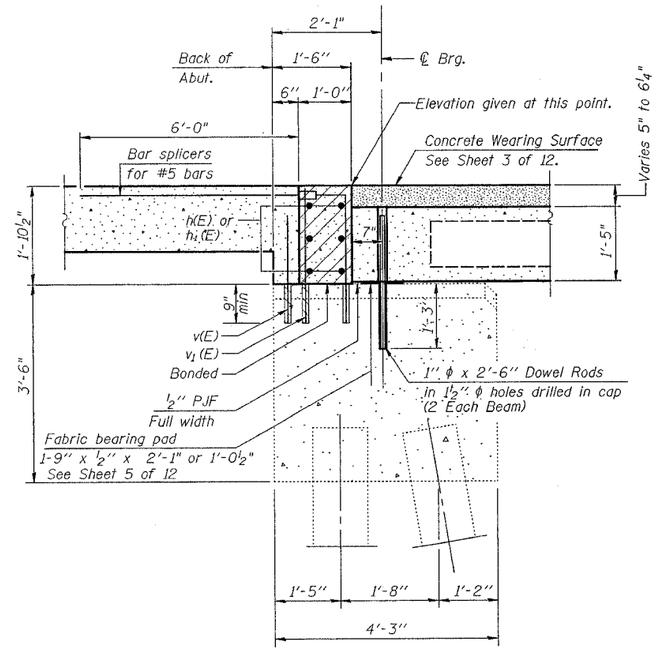

SEC. B-B

BILL OF MATERIAL

Bar	No.	Size	Length	Shape
h(E)	6	#5	16'-1"	———
h_1(E)	6	#5	19'-5"	———
* v(E)	37	#5	2'-3"	———
* v_1(E)	37	#5	2'-6"	———
Concrete Structures			Cu. Yd.	2.7
Reinforcement Bars, Epoxy Coated			Pound	410

Notes:

Hatched area shall be poured after Concrete Wearing Surface (including blockout) is in place and cured. Cost of temporary retainers, and accessories are included with Precast Prestressed Concrete Deck Beams (17" Depth).

After beams have been erected, holes shall be drilled into substructure and anchor dowels placed. Dowel holes shall be filled with non-shrink grout to top of beam and allowed to cure min. 24 hrs. prior to grouting the shear keys.

* Epoxy grout Bars v(E), v_1(E) and Bar Splicers in 9" min. drilled holes according to Section 584 of the Standard Specifications.

Reinforcement bars designated (E) shall be epoxy coated.

See sheet 5 of 12 for bearing pad details.

NORTH ABUTMENT

IL. RTE. 78 OVER
DAVIS CREEK
F.A. 642 SECTION (10BR-3)D & 11BR-8
JO DAVIESS COUNTY
STA. 20+75.37
STRUCTURE NUMBER 043-0042

DATE : 12-21-05

DESIGNED	CQM
CHECKED	EMM
DRAWN	CQM
CHECKED	EMM

200
EXAMINED
ENGINEER OF BRIDGE DESIGN
PASSED
ENGINEER OF BRIDGES AND STRUCTURES

default
12/23/2005
10:56:01 AM
K:\structures\IL RTE 78\OVER DAVIS CREEK\SHEETS FILE DAVIS\IDC N ABUTDET.dgn