F.A. RTE.	SECTION	COUNTY	TOTAL SHEETS	SHEET NO.
595	1 - 1	ROCK ISLAND	239	160
STA		TO STA		
FED. RD DIST. NO.	ILLINOIS	FED. AID PROJECT		
			CONTRACT # 84986	

TRENCH DETAIL FOR ALL EXCAVATIONS UNDER OR WITHIN TWO FEET OF A PROPOSED OR EXISTING PAVEMENT

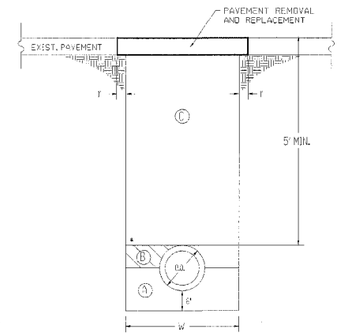

AREA (A) FA-1 OR FA-2 BEDDING COMPACTED IN 8" LIFTS ACCORDING TO ART. 550.07

AREA (B) TRENCH BACKFILL (PAY ITEM) COMPACTED IN 8" LIFTS ACCORDING TO ART. 550.07

AREA (C) TRENCH BACKFILL (PAY ITEM), COMPACTED BY METHOD 1, 2, OR 3 ART. 550.07.

BEDDING, BACKFILLING AND COMPACTING AREA A ARE INCIDENTAL TO THE WATERMAIN CONSTRUCTION.

TRENCH DETAIL FOR EXCAVATIONS OUTSIDE PAVED AREAS

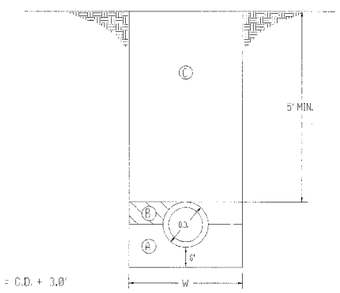

AREA (A) FA-1 OR FA-2 BEDDING COMPACTED IN 8" LIFTS ACCORDING TO ART. 550.07

AREA (B) SELECT MATERIAL - NATIVE SOIL EXCAVATED FROM THE TRENCH, FREE OF ROCKS, FOREIGN MATERIALS, AND FROZEN EARTH, COMPACTED IN 8" LIFTS ACCORDING TO ART. 550.07

AREA (C) EXCAVATED MATERIAL FREE OF ROCKS LARGER THAN 8" IN GREATEST DIMENSION COMPACTED BY METHOD 1, 2, OR 3 ART. 550.07

BEDDING, BACKFILLING AND COMPACTING AREAS A, B, AND C ARE INCIDENTAL TO THE WATERMAIN CONSTRUCTION.

REVISION	BY	DATE
REVISED	MJW	08/22/94
STANDARDIZED	MEE	08/20/94

TRENCH DETAILS FOR WATERMAIN INSTALLATION

CITY OF ROCK ISLAND ENGINEERING DIVISION | STANDARD NO. 306

REVISIONS NAME	DATE

ILLINOIS DEPARTMENT OF TRANSPORTATION

SPECIAL UTILITY DETAILS

SCALE: VERT. HORIZ.

DATE

DRAWN BY

CHECKED BY

PLAN NOTE BOOK NO. — CORRECTED BY — DATE — PLOTTED — CHECKED BY — AS NOTED — CADD FILE NAME

PROJ. ENGINEER — SURVEYED — PLOTTED — CHECKED BY — AS NOTED — SIGNATURE NOTATIONS CHKD — NOTE BOOK NO. — BY — DATE