93408

ROUTE NO.	SECTION	COUNTY	TOTAL SHEETS	SHEET NO.
CH 3	*	PIKE	17	8
FED. ROAD DIST. NO. 7	ILLINOIS	PROJECT	BRS-601(171)	

*04-00079-00-BR

SHEET NO. 2
11 SHEETS

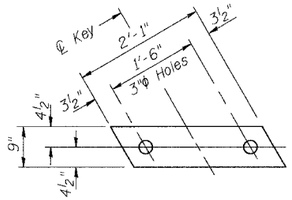

½" FABRIC BEARING PAD
(Interior) 40 required

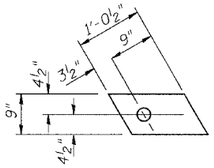

½" FABRIC BEARING PAD
(Exterior) 8 required

FIXED

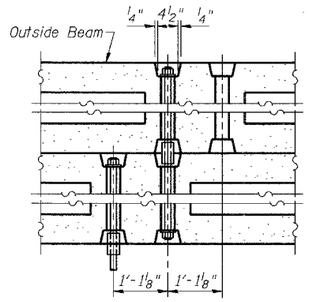

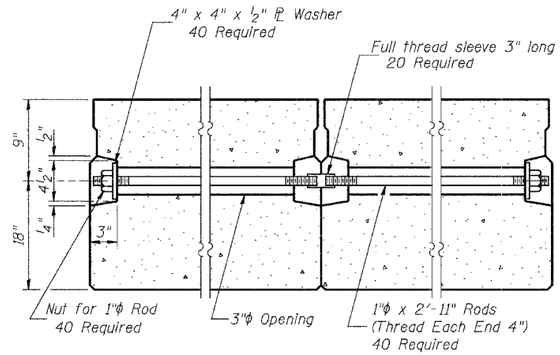

TYPICAL TRANSVERSE TIE ASSEMBLY

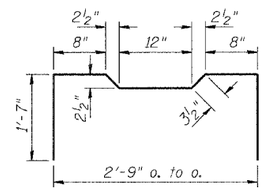

BAR A1

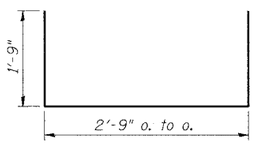

BARS U & U1

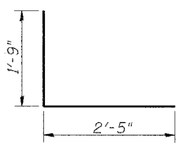

BAR D

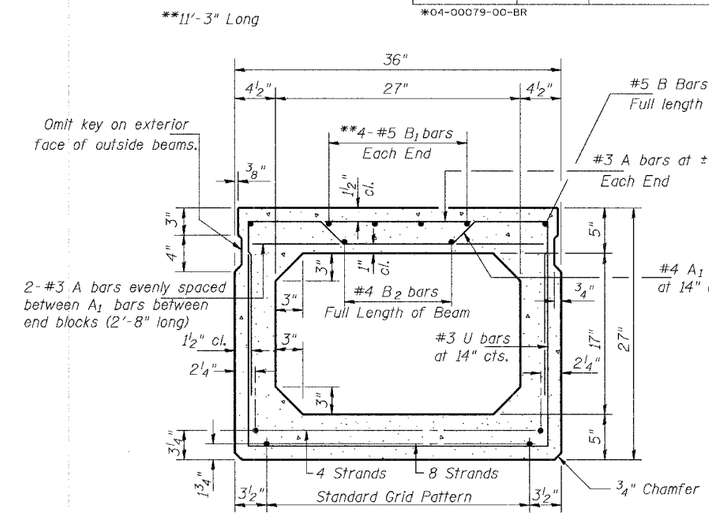

TYPICAL SECTION
12-½"φ Strands Each Strand Stressed to 30,900 Lbs.
8-Strands 1¾" up, 4-Strands 3¼" up

Note: Place strands symmetrically about ℄ of beam.

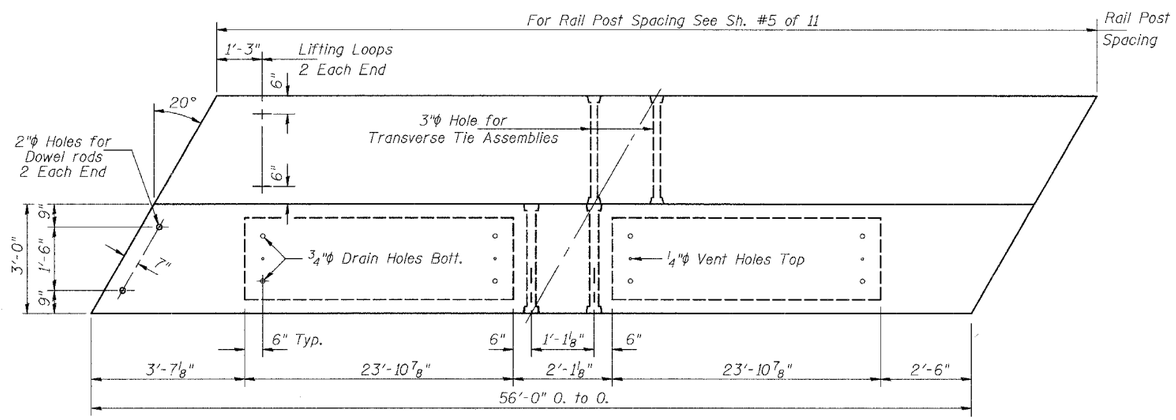

PLAN

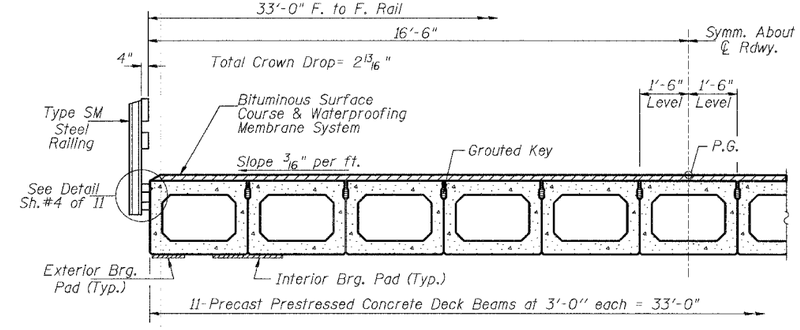

HALF CROSS SECTION

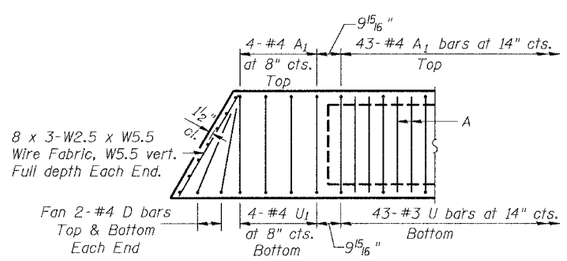

END PLAN

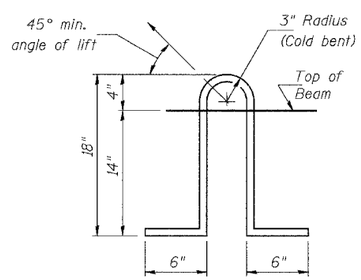

LIFTING LOOP DETAIL

NOTES

Prestressing steel shall be uncoated high strength, low relaxation 7-wire strand, Grade 270. The nominal diameter shall be ½" and the nominal cross-sectional area shall be 0.153 sq. in.

Lifting loops shall be 2-½"φ-270 ksi strands, as shown.

The 1"φ rods in the transverse tie assembly shall be tightened to a snug fit and the threads set. Pockets that receive transverse tie bar on outside shall be filled with grout after transverse tie assembly is in place.

Non prestressing steel shall conform to the requirements of AASHTO M-31 or M-322 Grade 60.

The bearing seat surfaces shall be adjusted by shimming to assure firm and even bearing. Two ⅛" fabric adjusting shims of the dimensions of the Exterior Bearing Pad shall be provided for each bearing.

Keyway surfaces shall be cleaned to remove form oil or other bond breaking material prior to shipment of the beams. Cleaning shall be done by sandblasting the keyway areas between top of the beam and the bottom edge of the key.

A Corrosion Inhibitor, as covered in the Special Provisions, shall be used in the concrete for precast prestressed concrete deck beams.

Required Release Strength, f'ci, shall be 4,000 p.s.i.

Rail post anchor devices shall be cast into outside face of exterior beams as specified elsewhere.

BILL OF MATERIAL

ITEM	UNIT	QUANTITY
Precast Prestressed Concrete Deck Beams (27" Depth)	SQ FT	3,696

SUPERSTRUCTURE-SPANS 1 & 3
C.H. 3 OVER BAY CREEK
SEC. 04-00079-00-BR
PIKE COUNTY
STATION 133+69.88

2302B002