F.A.U. RTE.	SECTION	COUNTY	TOTAL SHEETS	SHEET NO.
8873	00-00012-00-PK	MADISON	18	15
FED. ROAD DIST. NO.	ILLINOIS	FED. AID PROJECT		

CONTRACT No. 97270

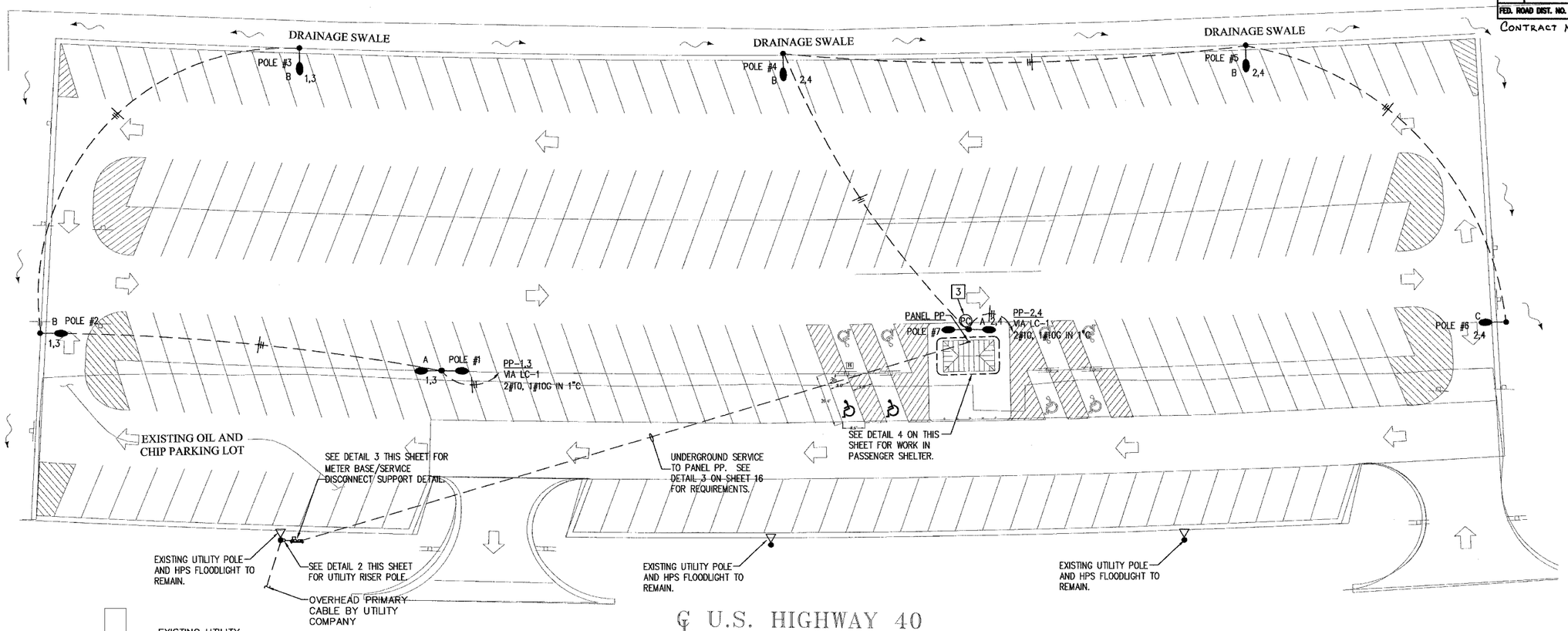

1/15 ELECTRICAL SITE LIGHTING PLAN

SCALE: 1" = 20'-0"

N

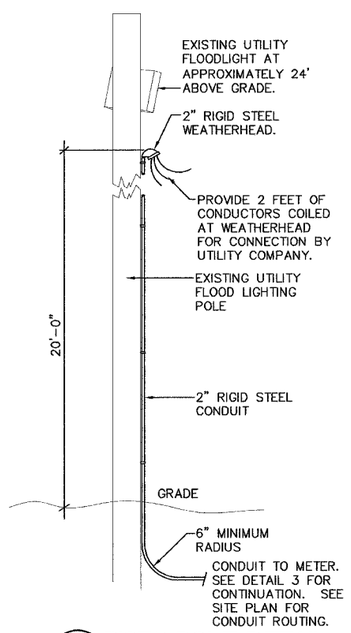

2/15 RISER POLE DETAIL

NO SCALE

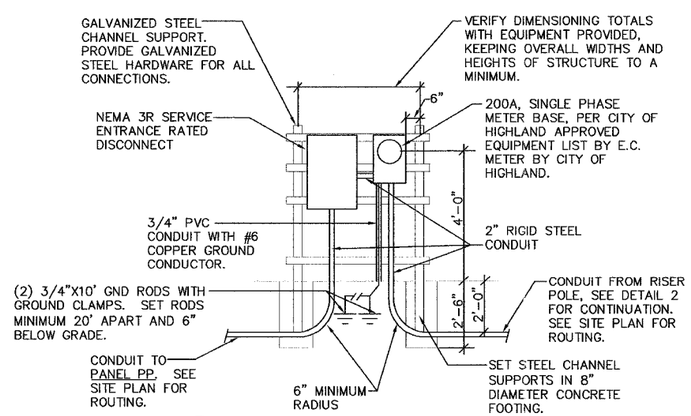

3/15 METER BASE SUPPORT DETAIL

NO SCALE

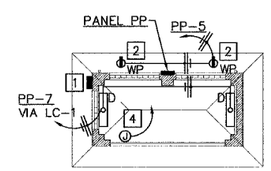

NOTE:
ALL CONDUCTORS ON THIS PLAN SHALL BE #12 AWG IN 3/4" CONDUIT UNLESS OTHERWISE INDICATED

4/15 PASSENGER SHELTER PLAN

SCALE: 1/8"=1'-0"

N

GENERAL NOTES (THIS SHEET ONLY)

1. ALL SITE LIGHTING CONDUCTORS SHALL BE #10 AWG IN 1" PVC UNLESS OTHERWISE INDICATED. REFER TO PLAN FOR HACHURES INDICATING QUANTITY OF CONDUCTORS IN EACH CONDUIT.
2. REFER TO CIVIL SITE PLAN ON SHEET 6 FOR LOCATION OF ALL POLES.
3. SEE DETAIL 3 ON SHEET 16 FOR ELECTRICAL ONE LINE DIAGRAM AND SERVICE ENTRANCE DETAILS.

KEYED NOTES (THIS SHEET ONLY)

1. NEMA 3R, SURFACE MOUNTED ENCLOSURE WITH PADLOCKABLE HARDWARE, 18"x18"x8" OR SIZED TO ACCOMMODATE ASTRONOMICAL TIMECLOCK AND 8 POLE MECHANICALLY HELD LIGHTING CONTACTOR (LC-1). SEE LIGHTING CONTROL WIRING DIAGRAM ON SHEET 16.
2. RECESS MOUNT RECEPTACLE IN SOFFIT OF PASSENGER SHELTER.
3. MOUNT PHOTOCELL FOR CONTROL OF SITE LIGHTING ON TOP CAP OF SITE LIGHTING POLE. SEE LIGHTING CONTROL DIAGRAM ON SHEET 16.
4. ROUGH-IN A 4" SQUARE BOX WITH GASKETED BLANK COVERPLATE AT 9'-0" AFF. EXTEND A 3/4" CONDUIT BACK TO PANEL PP FOR FUTURE SPACE HEATER.

FINAL SURVEY	BY	DATE
SURVEYED		
PLOTTED		
NOTE BOOK TEMPLATE		
AREAS		
NO. AREAS CHECKED		

ORIGINAL SURVEY	BY	DATE
SURVEYED		
PLOTTED		
NOTE BOOK TEMPLATE		
AREAS		
NO. AREAS CHECKED		

BRiC PARTNERSHIP, LLC
CONSULTING ENGINEERS
100 EAST WASHINGTON, SUITE 220
BELLEVILLE, IL 62220
TEL 618.277.6200
FAX 618.277.5227

ELECTRICAL PLANS AND DETAILS
HIGHLAND PARK-RIDE IMPROVEMENTS
MADISON COUNTY TRANSIT
HIGHLAND, ILLINOIS
SECTION No. 00-00012-00-PK

SCALE: AS NOTED

REVISIONS			
NO.	DATE	BY	REMARKS

DSN. BY: JEN	DATE: 11-30-05	SHEET	
DWN. BY: JEN	DATE: 11-30-05	15	
CHK'D: BEC	DATE: 11-30-05		
DWG. NO.	JOB NO. 1268-04	DWG NAME: E1	OF 2 SHTS

M:\1268-04\Cad\Elec\el(15).dwg, Plotted By: jeffn, Plotted: Dec 20, 2005 - 4:47pm