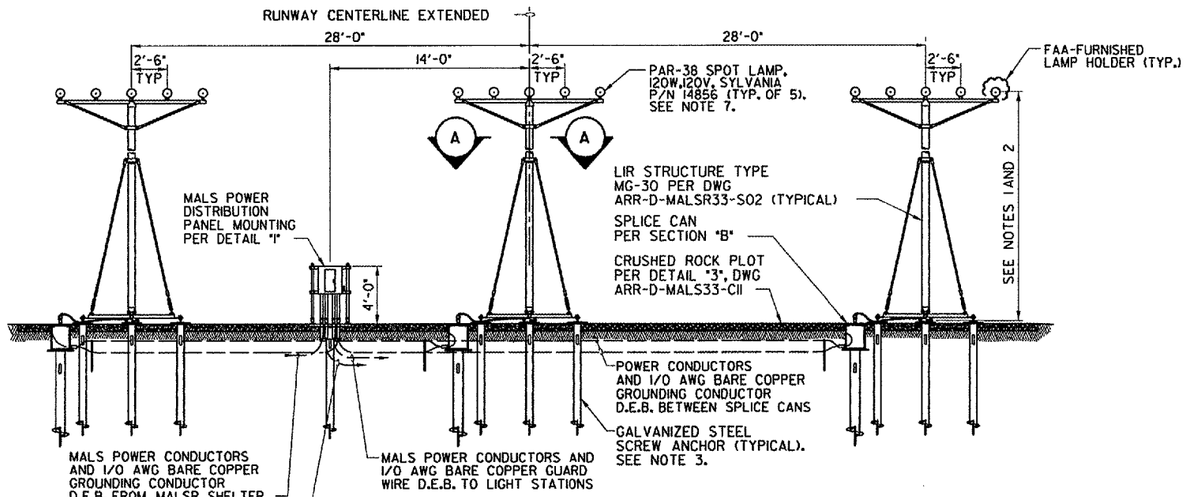

ELEVATION
(LOOKING TOWARD THRESHOLD)
STEADY-BURNING LIGHT BAR MOUNTED ON MG-30 LIR TOWER

4 0 4 8 12
SCALE IN FEET

NOTES:

1. SEE DWG ARR-D-MALSR33-C01 FOR LAMP CENTERLINE AND FOUNDATION TOP ELEVATIONS.
2. LIR STRUCTURES SHALL PIVOT TOWARD THE RUNWAY THRESHOLD. SEE NOTE 1, DWG ARR-D-MALSR33-S01 FOR LIR TUBE CUTTING LENGTH CALCULATION AND MG-20 LIR STRUCTURE ASSEMBLY DETAILS.
3. SCREW ANCHOR FOUNDATIONS SHALL CONSIST OF A.B. CHANCE 'INSTANT' FOUNDATIONS, CAT. NO. CT112-0262 FOR LIR TOWER AND WINCH FOUNDATIONS, AND CAT. NO. C112-42NG4VP FOR SPLICE CAN FOUNDATION. SEE SPECIFICATION FAA-GL-918C, SECTION 13B FOR INSTRUCTIONS REGARDING INSTALLATION OF THE ANCHORS.
4. EXCAVATE 2' DEEP HOLE AT SPLICE CAN LOCATION SHOWN, DRIVE SCREW ANCHOR SUCH THAT TOP OF PLATE IS 20" BELOW FINISHED GRADE. WELD SPLICE CAN BASE TO THE TOP OF THE ANCHOR MOUNTING PLATE AS SHOWN, WITH FLEX-CONNEX GROMMETS ORIENTED PROPERLY.
5. ALL CONNECTIONS TO GROUNDING RODS SHALL BE MADE USING EXOTHERMIC WELDS PER SPECIFICATIONS.
6. FOUNDATION SHALL BE CONSTRUCTED SUCH THAT LIR MAST IS CENTERED AT THE RUNWAY STATION AND OFFSET DISTANCE FROM RUNWAY CENTERLINE AS SHOWN.
7. SEE DETAILS "3" AND "5", DWG ARR-D-MALSR33-E01 FOR LIR LIGHT BAR WIRING AND LAMPHOLDER INSTALLATION DETAILS.

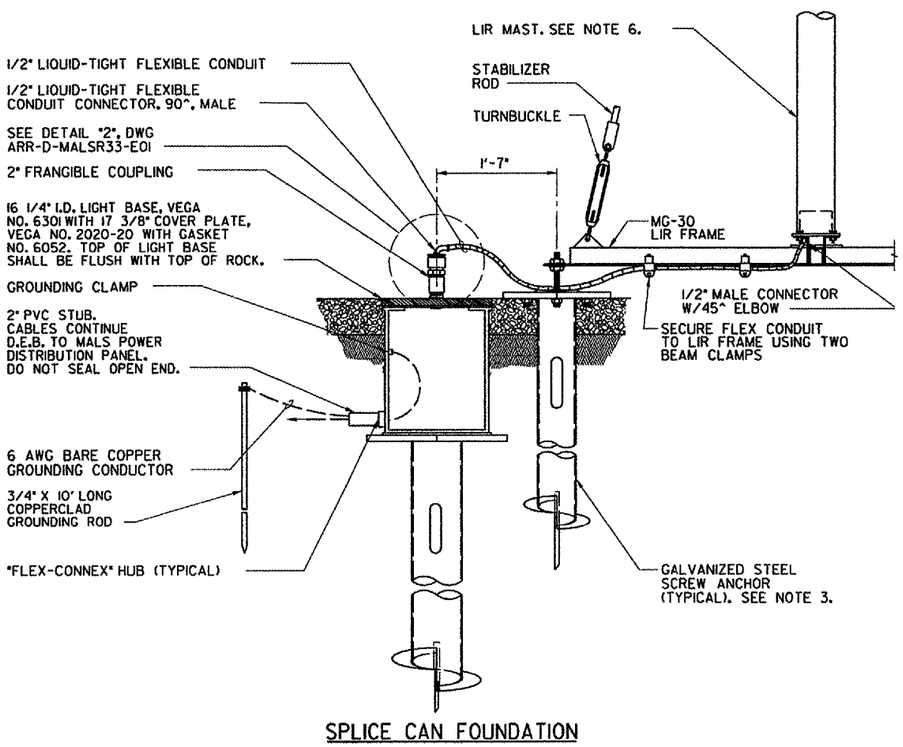

SPLICE CAN FOUNDATION
B SECTION

1 0 1 2
SCALE IN FEET

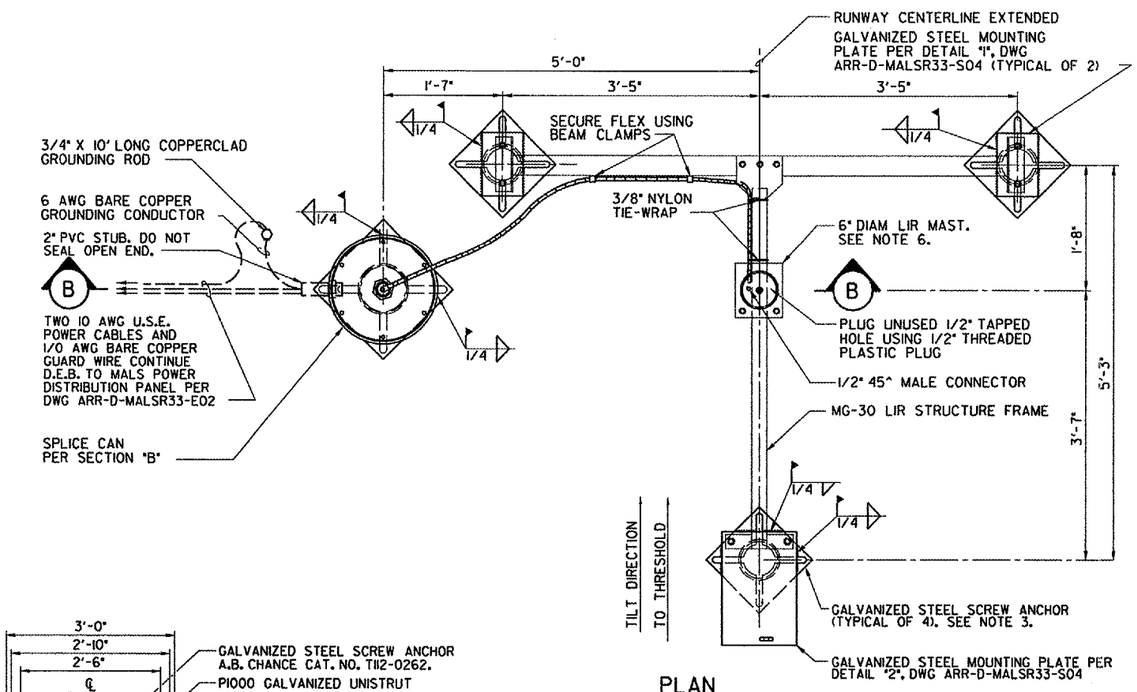

PLAN
MG-30 LIR STRUCTURE FOUNDATION LAYOUT
A SECTION

1 0 1 2
SCALE IN FEET

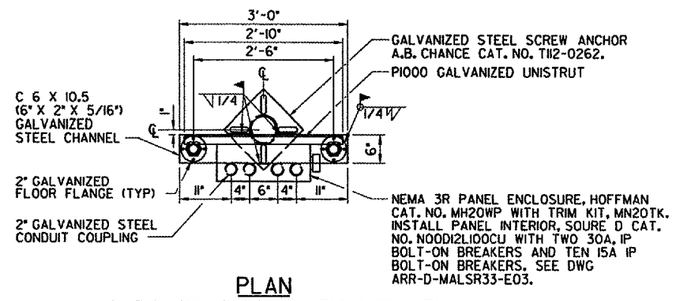

PLAN
MALS POWER DISTRIBUTION PANEL MOUNTING CHANNEL DETAIL
1 DETAIL

1 0 1 2
SCALE IN FEET

CONTRACTOR SHALL SUBMIT REQUESTS FOR SUBSTITUTION OF SPECIFIC MANUFACTURER'S ITEMS SHOWN PER PARAGRAPH 1 OF THE SPECIAL SPECIFICATIONS.

REV	DATE	DESCRIPTION	JCN	REDLINE DATE	APVD

SHEET 30 OF 66

DEPARTMENT OF TRANSPORTATION
FEDERAL AVIATION ADMINISTRATION
GREAT LAKES REGION — CHICAGO, ILLINOIS

MALSR
FOUNDATION DETAILS FOR STEADY-BURNING LIGHT BARS AT STATION 11+00

AURORA — AURORA MUNICIPAL AIRPORT — IL

REVIEWED BY | SUBMITTED BY | APPROVED BY
PROJ ENGR, TIMOTHY DYER | PLATFORM MGR, CLELAND MICHEEL
DESIGNED TAD | DRAWN TAD | CHECKED EGS
ISSUED BY CHICAGO NAS IMPLEMENTATION CENTER
DATE 02/27/2006 | JCN | DRAWING NO ARR-D-MALSR33-C07 | REV

SHEET