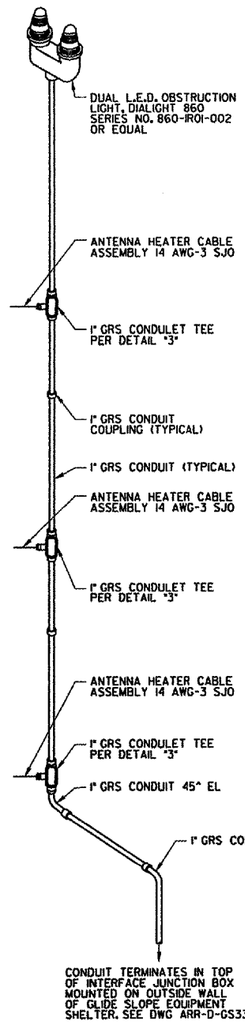

ANTENNA TOWER ELECTRICAL EQUIPMENT INSTALLATION

1 DETAIL
SCALE: NONE

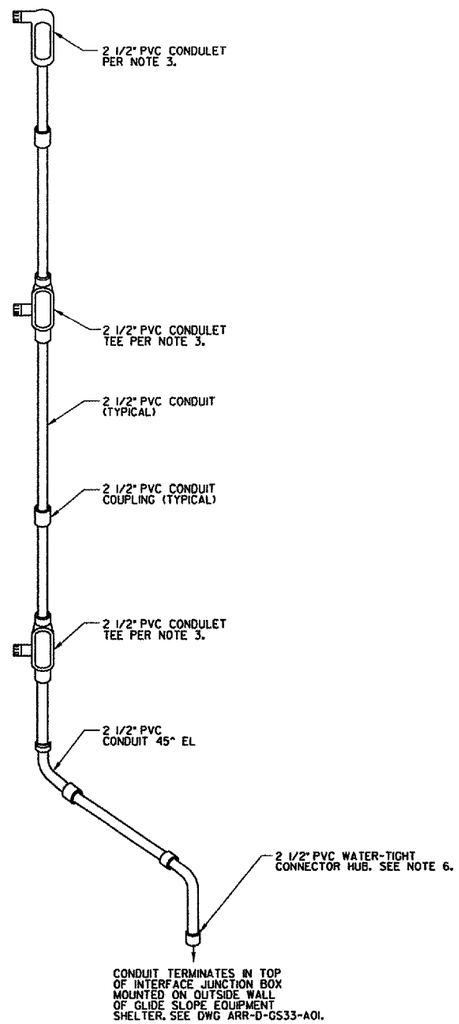

ANTENNA TOWER RF EQUIPMENT INSTALLATION

2 DETAIL
SCALE: NONE

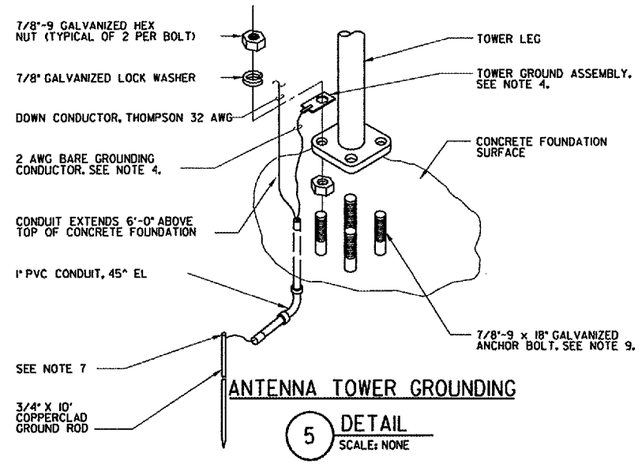

ANTENNA TOWER GROUNDING

5 DETAIL
SCALE: NONE

NOTES:

1. THE OBSTRUCTION LIGHT SHALL BE OPERATIONAL BEFORE DUSK OF THE FIRST DAY THAT THE ANTENNA TOWER IS ERECTED.
2. CONDUITS SHALL BE CLAMPED TO ANTENNA TOWER STRUCTURAL MEMBERS ON TOWER FACE OPPOSITE FACE WITH LADDER AT 5'-0" O.C. MAX.
3. 1" RIGID GALVANIZED STEEL CONDUIT AND 2 1/2" PVC CONDUIT SHALL BE INSTALLED PER DETAIL "6". A 2 1/2" PVC CONDULET SHALL BE INSTALLED ON THE 2 1/2" PVC CONDUIT FOR EACH GLIDE SLOPE ANTENNA, CENTERED AT THE ANTENNA'S HEIGHT ABOVE GRADE. THE TEE OF EACH CONDULET SHALL BE ORIENTED TOWARD THE ANTENNA. INSTALL REDUCING BUSHINGS IN THE TEE TO FACILITATE INSTALLATION OF A 1" CONDUIT.
4. TOWER GROUND ASSEMBLY IS PROVIDED WITH A 6 AWG BARE COPPER WIRE ATTACHED. THE 6 AWG BARE COPPER SHALL BE REMOVED AND REPLACED WITH A 2 AWG BARE COPPER WIRE. SEE NOTE 7.
5. ANTENNA RF CABLES WILL BE FURNISHED AND INSTALLED BY FAA INSTALLATION PERSONNEL.
6. THE CONDUIT SHALL ENTER THE TOP OF THE RF AND CONTROL INTERFACE JUNCTION BOX AS CLOSE TO THE SIDE AS POSSIBLE, CENTERED 4" FROM THE BACK.
7. ALL CONNECTIONS TO GROUNDING RODS SHALL BE MADE USING EXOTHERMIC WELDS PER SPECIFICATIONS.
8. ANTENNA TOWER LIGHTNING PROTECTION SHALL BE FURNISHED AND INSTALLED BY THE CONTRACTOR PER THE REQUIREMENTS OF NFPA 78. CONTRACTOR SHALL INSTALL A 24" LONG AIR TERMINAL, THOMPSON NO. 572, AND THOMPSON 32 AWG DOWN CONDUCTOR ON THE INSIDE OF TWO TOWER LEGS, SECURED TO THE TOWER USING THOMPSON CLAMPS @ 3' O.C. MAX. DOWN CONDUCTORS SHALL TERMINATE AT SEPARATE GROUNDING RODS. SEE NOTE 7.
9. REFER TO GOVERNMENT-FURNISHED PROPERTY LIST (GFPL) FOR ITEMS FURNISHED BY THE FAA.

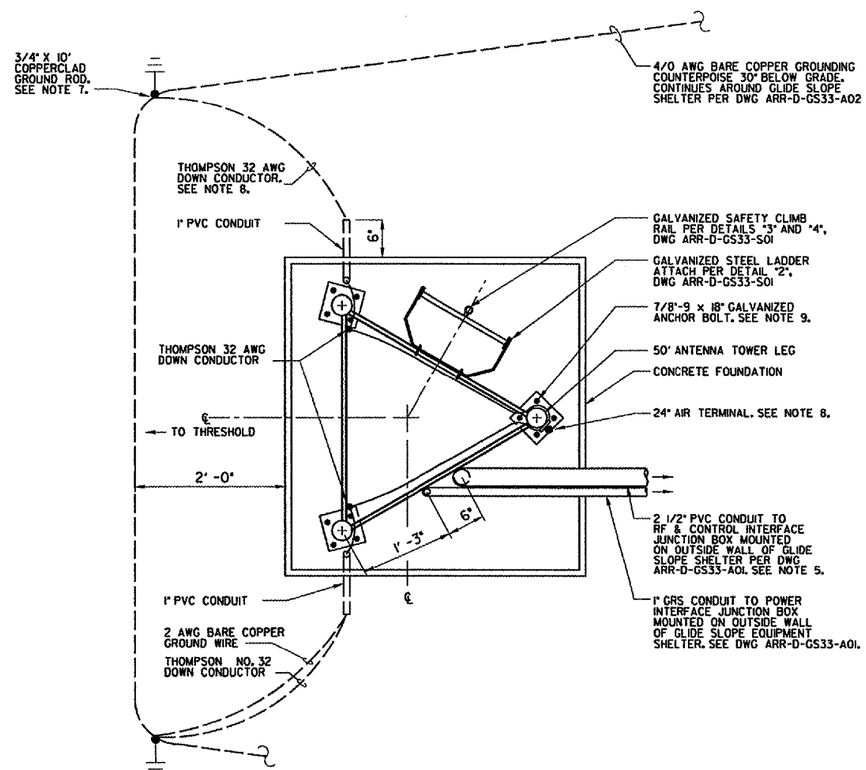

ANTENNA TOWER LIGHTNING PROTECTION

6 DETAIL

1 0 1 2
SCALE IN FEET

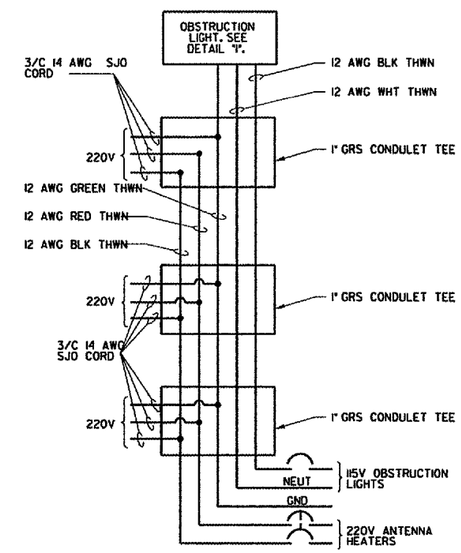

ANTENNA HEATER AND OBSTRUCTION LIGHT WIRING

7 DETAIL
SCALE: NONE

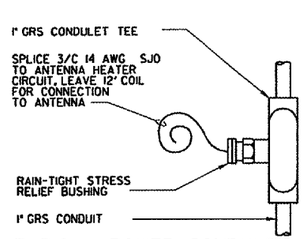

TYPICAL POWER CONDULET

3 DETAIL
SCALE: NONE

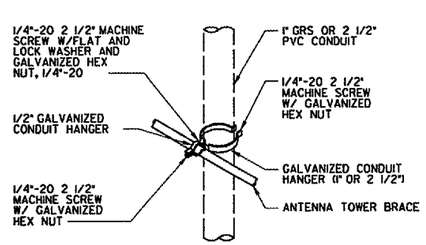

TYPICAL CONDUIT ATTACHMENT

4 DETAIL
SCALE: NONE

CONTRACTOR SHALL SUBMIT REQUESTS FOR SUBSTITUTION OF SPECIFIC MANUFACTURER'S ITEMS SHOWN PER PARAGRAPH 1 OF THE SPECIAL SPECIFICATIONS.

REV	DATE	DESCRIPTION	JCN	REDLINE DATE	APVD

SHEET 49 OF 66

DEPARTMENT OF TRANSPORTATION
FEDERAL AVIATION ADMINISTRATION
GREAT LAKES REGION — CHICAGO, ILLINOIS

GLIDE SLOPE

ANTENNA TOWER ELECTRICAL AND GROUNDING DETAILS

AURORA — AURORA MUNICIPAL AIRPORT — IL

REVIEWED BY | SUBMITTED BY | APPROVED BY

PROJ ENGR, *TIMOTHY DYER* | PLATFORM MGR, *CLELAND MICHEEL*

DESIGNED TAD | DRAWN TAD | CHECKED EGS

ISSUED BY CHICAGO NAS IMPLEMENTATION CENTER

DATE 02/27/2006 | JCN | DRAWING NO ARR-D-GS33-E01 | REV

k:\aurorap\0428504\dgns\sheets\fac lis drawings 3-6-06\ARR-D-GS33-E01.dgn
3/16/2006 3:48:27 PM $NAME$