| F.A.P. RTE. | SECTION | COUNTY | TOTAL SHEETS | SHEET NO. |
|---|---|---|---|---|
| 303 | 29R-T | McHENRY | 88 | 19 |
| STA. 0+643.40 | | TO STA. 0+800 | | |
| FED. ROAD DIST. NO. 1 | | ILLINOIS | FED. AID PROJECT | |
| JOB D-91-190-01 | | CONTRACT NO. 62202 | | |

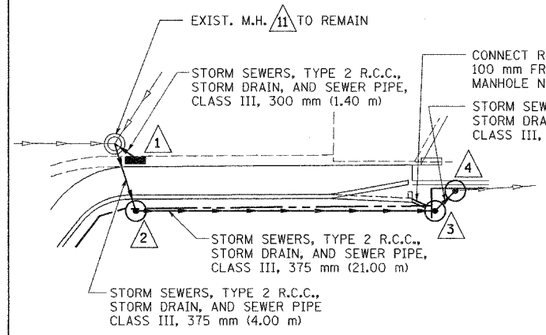


DETAIL "A"
NTS

NOTES:

1. THE CONTRACTOR SHALL SCHEDULE HIS OPERATIONS SO THAT THE TEMPORARY EASEMENT (SEE PLAT OF SURVEY FOR LIMITS) WILL REMAIN OPEN DURING TIMES OF SCHEDULED DELIVERIES FOR THE BUSINESS AT THIS LOCATION AND DURING TIMES WHEN THE CONTRACTOR IS NOT ACTUALLY WORKING."

2. SEE SCHEDULE OF QUANTITIES AND DRAINAGE STRUCTURE SCHEDULE SHEET.

* RETAINING WALL UNDERDRAIN DAYLIGHT TO DRAIN. FIELD VERIFY AND COORDINATE WITH THE RESIDENT ENGINEER FOR EXACT LOCATION OF PIPE BANDS & DAYLIGHT LOCATIONS. PROVIDE RODENT SHIELDS AND SPLASH BLOCKS AT THE END OF THE UNDERDRAINS. COST INCLUDED WITH PIPE UNDERDRAIN FOR STRUCTURES 100 MM.

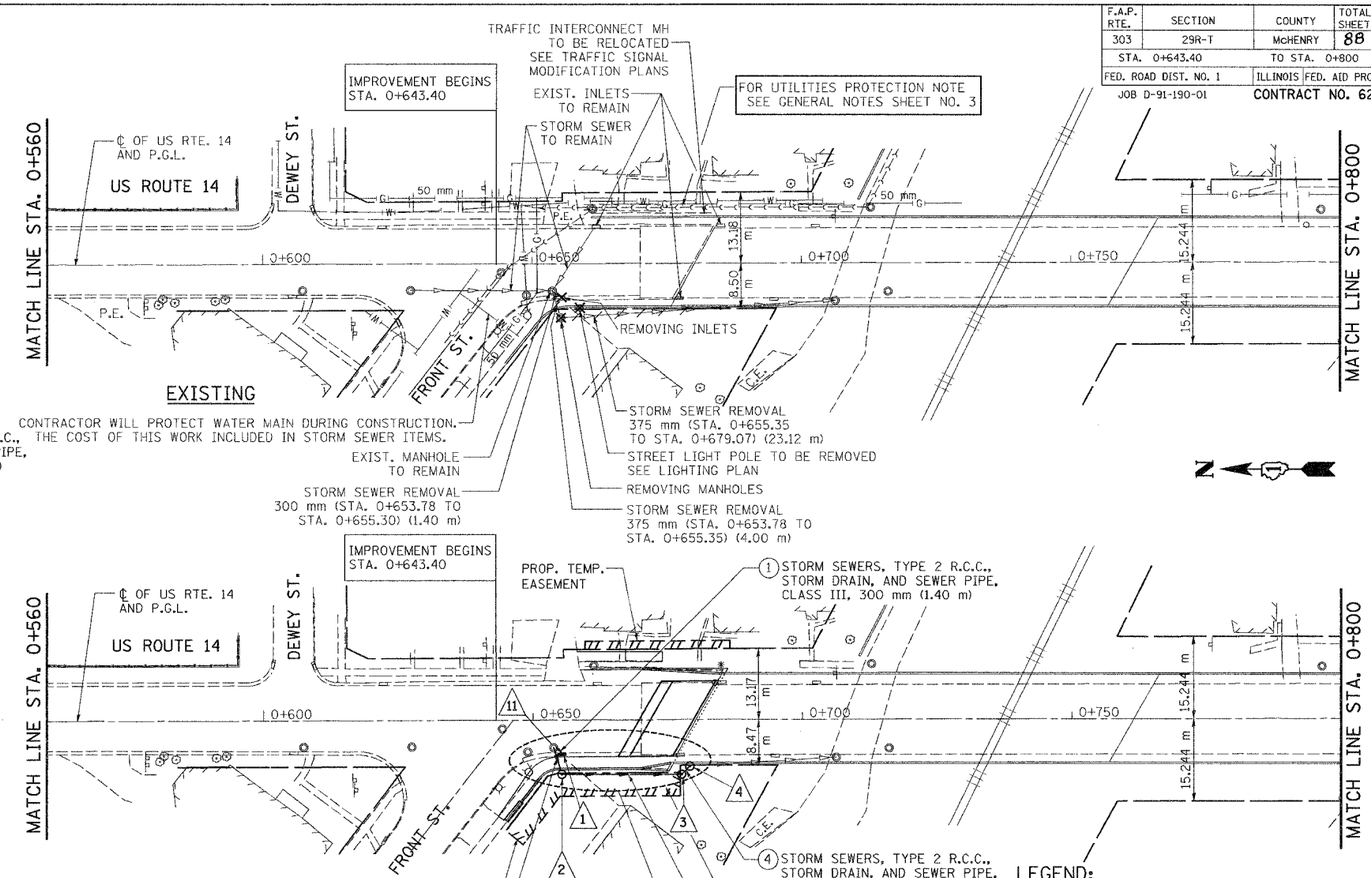


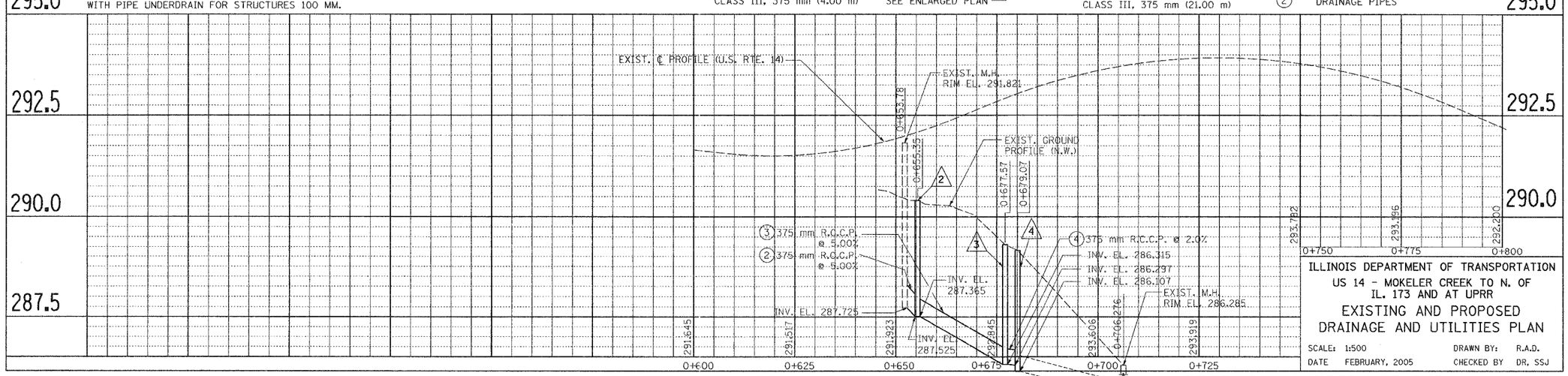


ILLINOIS DEPARTMENT OF TRANSPORTATION
US 14 - MOKELER CREEK TO N. OF IL. 173 AND AT UPRR

EXISTING AND PROPOSED DRAINAGE AND UTILITIES PLAN

SCALE: 1:500 DRAWN BY: R.A.D.
DATE FEBRUARY, 2005 CHECKED BY DR, SSJ

SOODAN & ASSOCIATES INC.
Architects, Engineers & Construction Consultants

| FINAL SURVEY | BY | DATE |
|---|---|---|
| SURVEYED | | |
| PLOTTED | | |
| NOTE BOOK | TEMPLATE | |
| NO. | AREAS | |
| | AREAS CHECKED | |

| ORIGINAL SURVEY | BY | DATE |
|---|---|---|
| SURVEYED | | |
| PLOTTED | | |
| NOTE BOOK | TEMPLATE | |
| NO. | AREAS | |
| | AREAS CHECKED | |

...\1253-pro-utility-1_f1.sht 02/10/2005 03:47:18 PM Plotted by: jsingh