F.A.I. RTE.	SECTION	COUNTY	TOTAL SHEETS	SHEET NO.
94/90	2003-031I	COOK	976	844
STA.		TO STA.		
FED. ROAD DIST. NO. _	ILLINOIS	FED. AID PROJECT		

62583

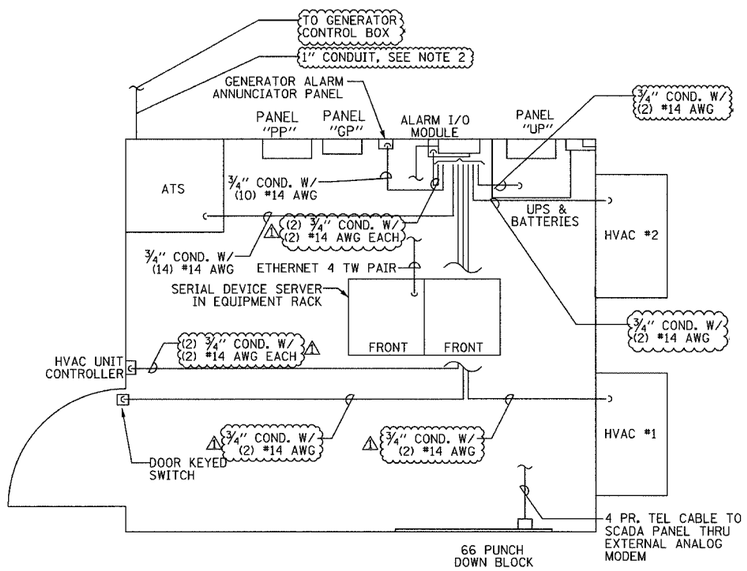

ALARM WIRING LAYOUT

NOT TO SCALE

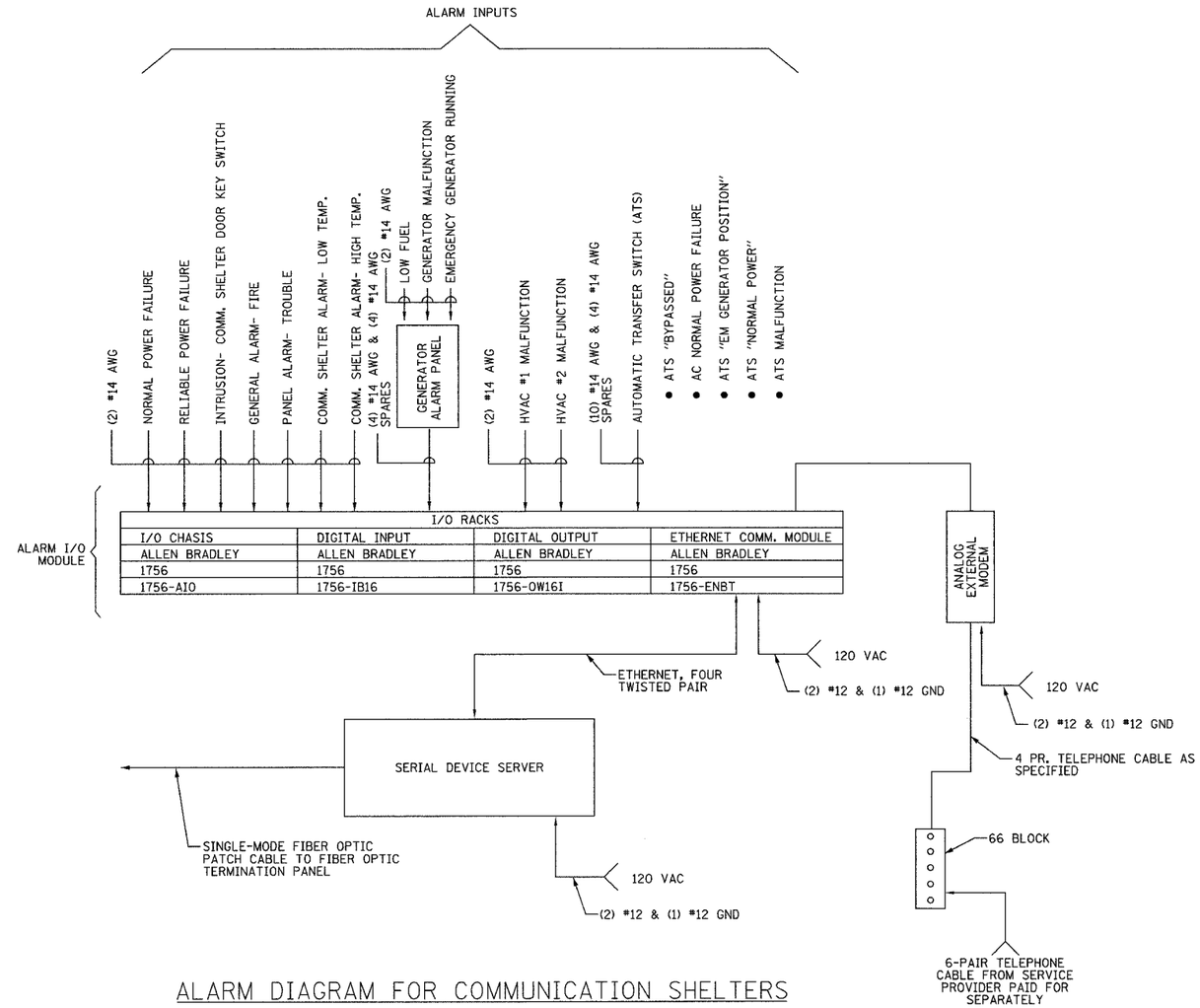

I/O RACKS			
I/O CHASIS	DIGITAL INPUT	DIGITAL OUTPUT	ETHERNET COMM. MODULE
ALLEN BRADLEY	ALLEN BRADLEY	ALLEN BRADLEY	ALLEN BRADLEY
1756	1756	1756	1756
1756-AIO	1756-IB16	1756-OW16I	1756-ENBT

ALARM DIAGRAM FOR COMMUNICATION SHELTERS

NOT TO SCALE

NOTES:
1. ALL ALARM WIRE INSULATION SHALL BE THWN UNLESS NOTED OTHERWISE.
2. QUANTITY OF ALARM & CONTROL WIRE SIZE PER MANUFACTURER'S RECOMMENDATION.

COMM-78

REVISIONS	
NAME	DATE
REVISION 1	12/17/04

ILLINOIS DEPARTMENT OF TRANSPORTATION

F.A.I. 94/90 (DAN RYAN EXPRESSWAY)
31st STREET to I-57

EAST SHELTER (R03)
ALARM SCHEMATIC

SCALE: NOT TO SCALE
DATE: October 29, 2004
DRAWN BY: JM
CHECKED BY: CS

Edwards AND Kelcey
ONE NORTH FRANKLIN
CHICAGO, IL 60606
PHONE: (312) 251-3000
FAX: (312) 251-3015
WEB: WWW.EKCORP.COM

12/15/2004 01:50:06 PM

P:\0300\9035\ts\cadd\comm\20792es.sht