STATE OF ILLINOIS
DEPARTMENT OF TRANSPORTATION

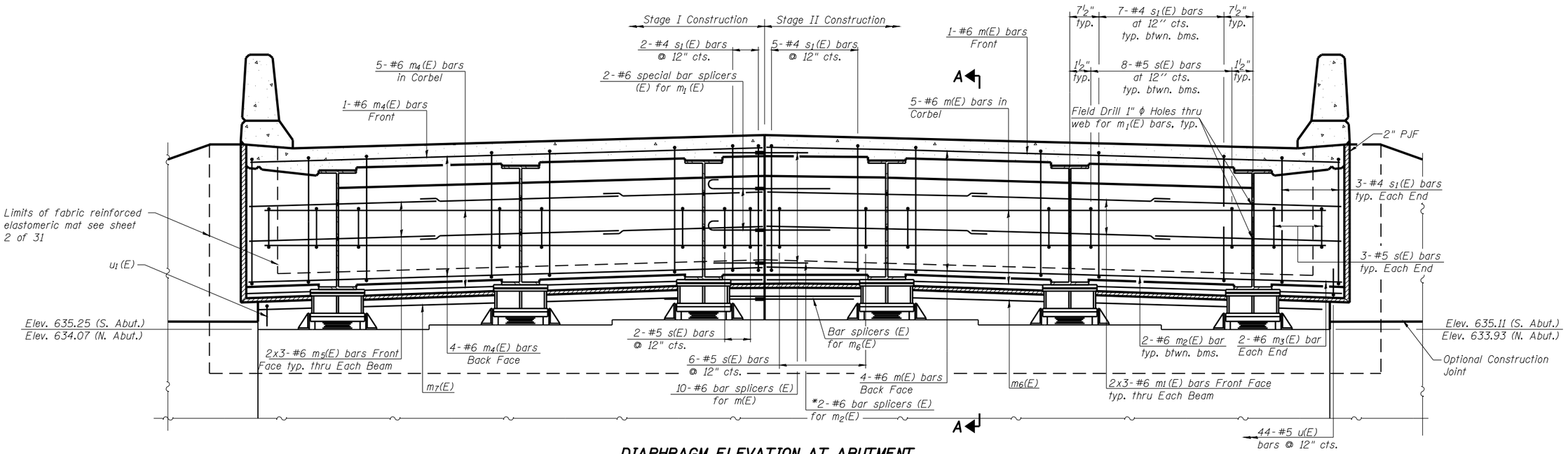

DIAPHRAGM ELEVATION AT ABUTMENT

(Looking South at South Abutment)
(North Abutment Similar)

* Cut to fit at Stage line.

Notes:

Reinforcement bars in diaphragm are billed with superstructure on sheet 11 of 31.

Concrete in diaphragm is included with Concrete Superstructure on sheet 11 of 31.

Concrete in backwall is included with Concrete Stuctures on sheet 11 of 31.

For details of bars s(E), s_1(E), v(E), u(E) & u_1(E) see sheet 11 of 31.

For layout of u_1(E), m_6(E) & m_7(E) bars see sheet 28 of 31.

The s(E) and s_1(E) bars shall be placed parallel to the beams. Spacing for these bars shall be at right angles to the beams.

The cost of field drilling holes in webs for m_1(E) & m_5(E) is included in the cost of Reinforcement Bars (Epoxy Coated).

MIN. BAR LAP

#6 bar = 3'-4" (Diaphragm)

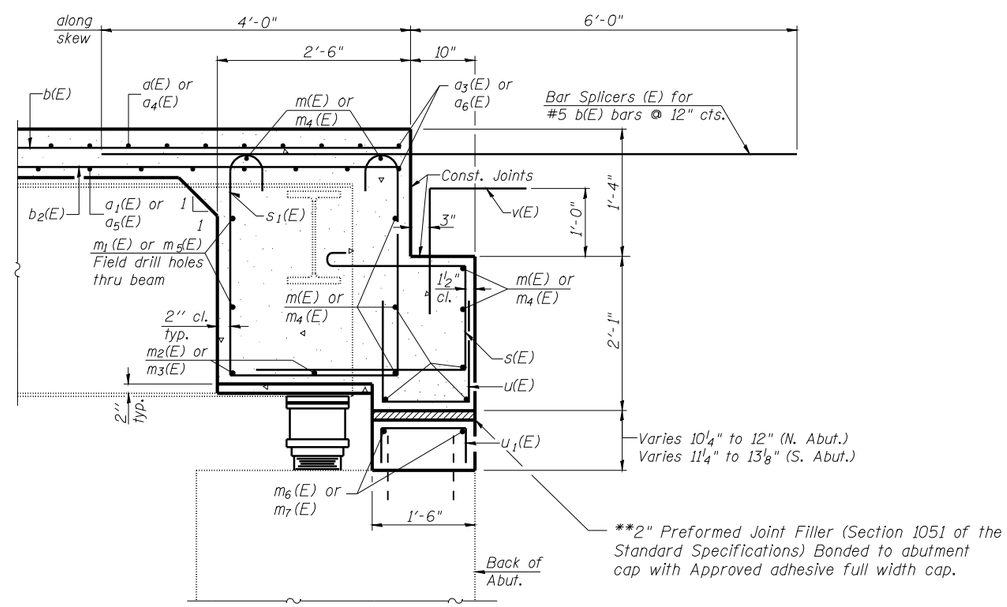

**Cost included with Concrete Superstructure.

SECTION A-A

Dimensions at right angles to abutment, except as shown.

SEMI-INTEGRAL DIAPHRAGM DETAILS STRUCTURE NO. 059-0040 (S.B.)

SHEET NO. 12	F.A.I. RTE.	SECTION	COUNTY	TOTAL SHEETS	SHEET NO.
31 SHEETS	55	(59, 68)RS-3, BR	Macoupin	137	115
			CONTRACT NO. 72921		
	FED. ROAD DIST. NO. 6	ILLINOIS	FED. AID PROJECT		