STATE OF ILLINOIS
DEPARTMENT OF TRANSPORTATION

* Order a(E), a_1(E), a_4(E) and a_5(E) bars full length. Cut to fit skew and use remainder of bars in opposite end.

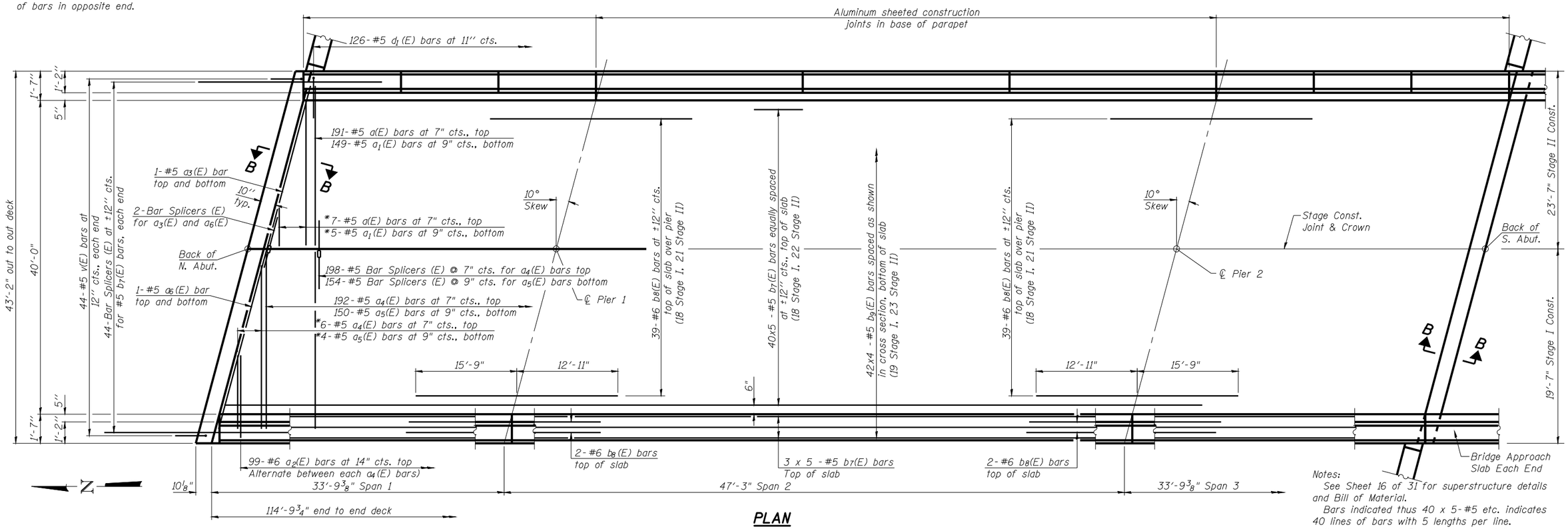

PLAN

Notes:
See Sheet 16 of 31 for superstructure details and Bill of Material.
Bars indicated thus 40 x 5-#5 etc. indicates 40 lines of bars with 5 lengths per line.
See Sheet 16 of 31 for parapet reinforcement.
See Sheet 17 of 31 for Section B-B.

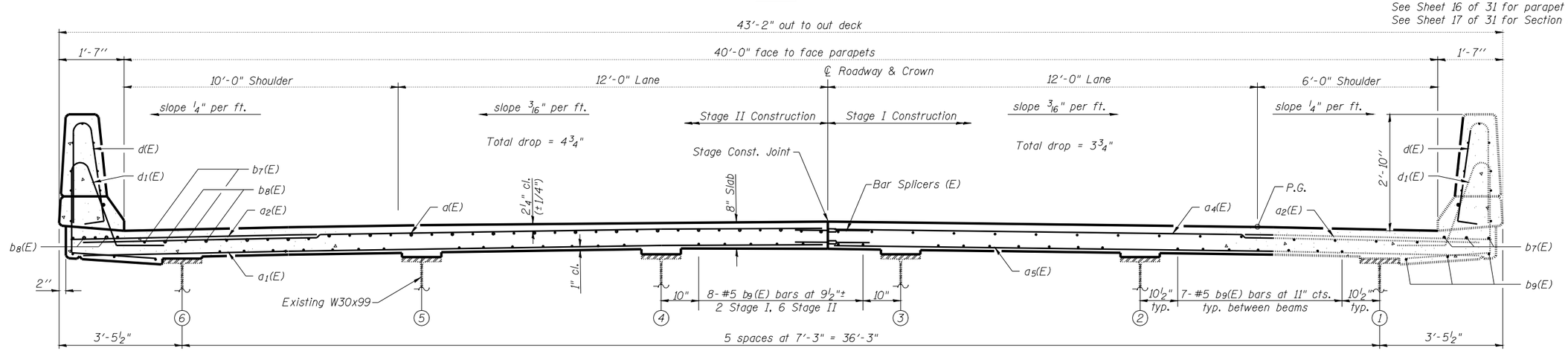

NEAR PIER **NEAR MIDSPAN**

CROSS SECTION
(Looking South)

MIN. BAR LAP
#5 bar = 2'-7'' (Deck)

SUPERSTRUCTURE
STRUCTURE NO. 059-0041 (N.B.)

SHEET NO. 15	F.A.I. RTE.	SECTION	COUNTY	TOTAL SHEETS	SHEET NO.
31 SHEETS	55	(59, 68)RS-3, BR	Macoupin	137	127
			CONTRACT NO. 72921		
	FED. ROAD DIST. NO. 6	ILLINOIS	FED. AID PROJECT		