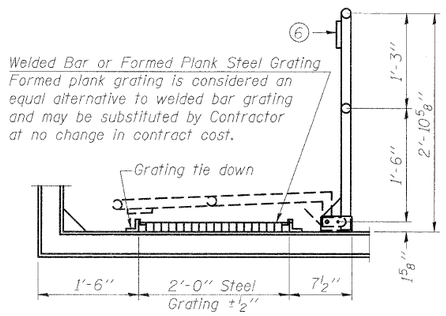

SIDE ELEVATION

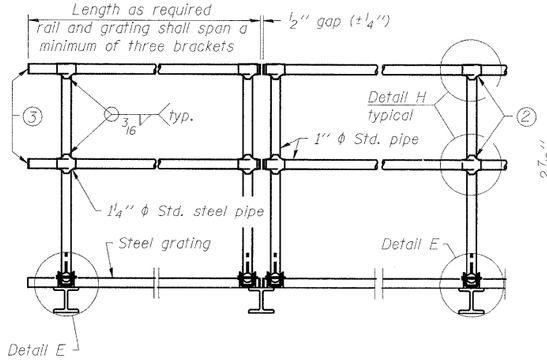

DETAIL D HANDRAIL FRONT ELEVATION

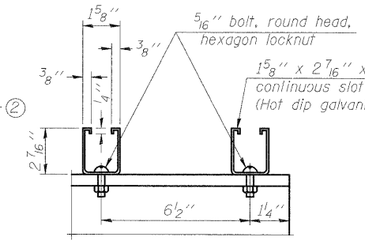

SECTION F-F
LIGHTING FIXTURE MOUNTS
(If required)

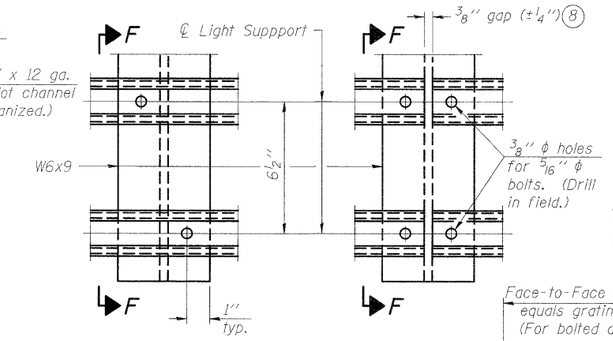

DETAIL F DETAIL G

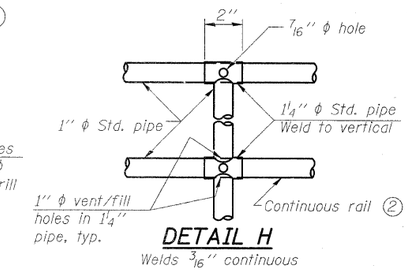

DETAIL H
Welds 3/16" continuous

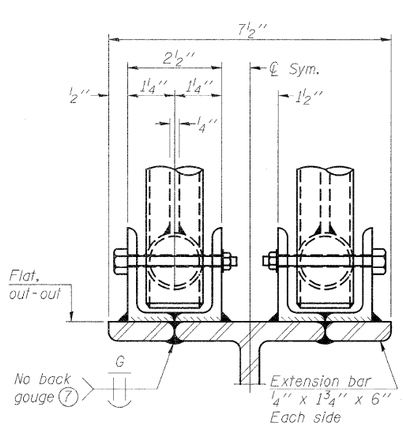

ELEVATION AT HANDRAIL JOINT
(Details not shown same as "FRONT ELEVATION")

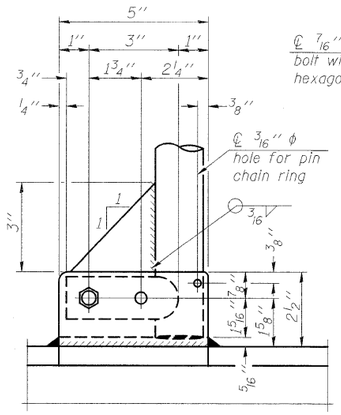

SIDE ELEVATION

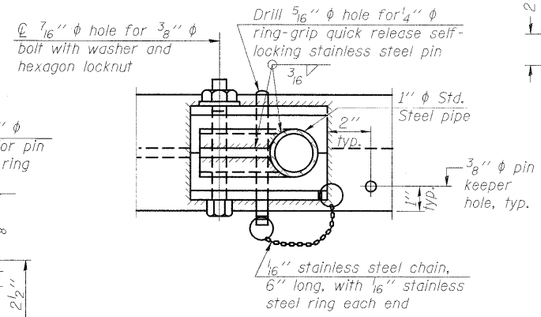

PLAN AT SINGLE HANDRAIL HINGE
DETAIL E

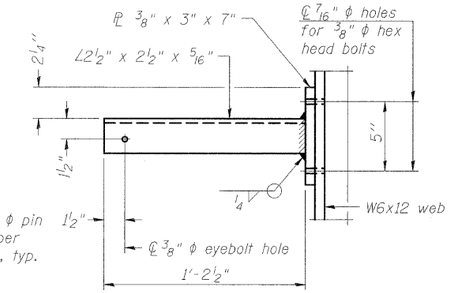

SECTION P-P

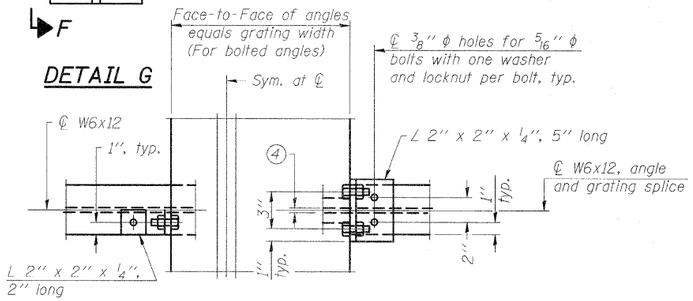

GRATING CONTINUOUS AT GRATING SPLICE

VIEW W-W

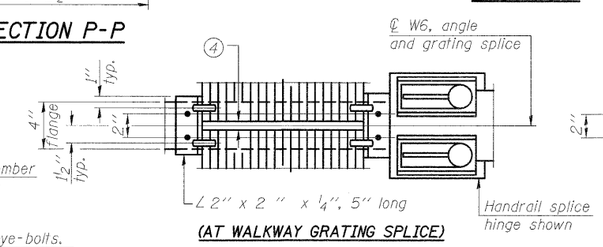

(AT WALKWAY GRATING SPLICE)

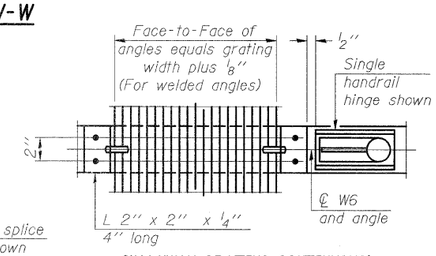

(WALKWAY GRATING CONTINUOUS)

PLAN

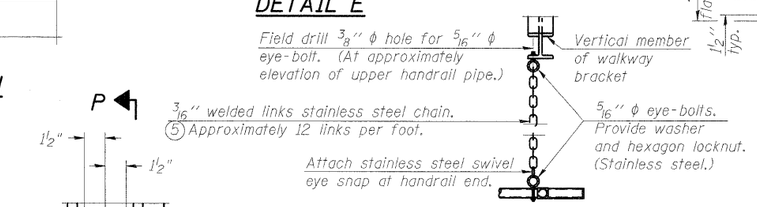

No Sign at Bracket

SAFETY CHAIN
One (1) required for each end of each walkway.

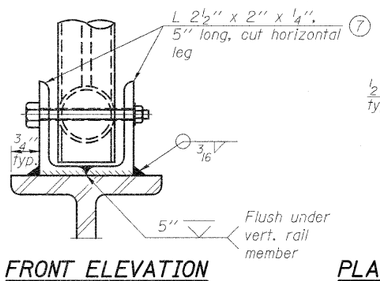

FRONT ELEVATION
(See above Elevations for dimensions.)

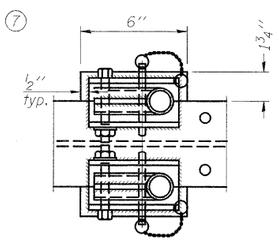

PLAN AT HANDRAIL JOINT
(For Details, see Elevations.)

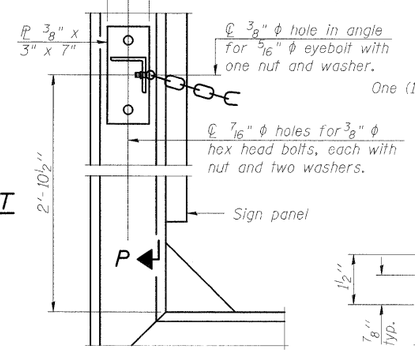

SAFETY CHAIN ATTACHMENT
(With Sign Present)
Items not shown same as "SIDE ELEVATION" and "SAFETY CHAIN"

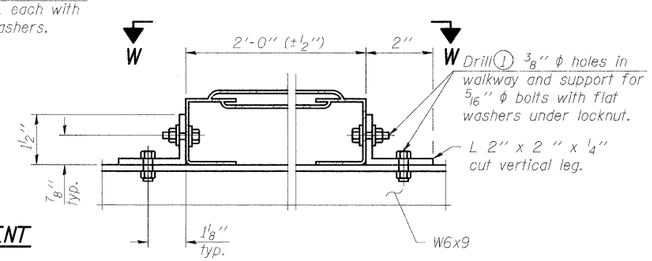

ALTERNATE FORMED PLANK GRATING DETAILS
Plank Grating: nominal depth = 2 1/2" (±1/2"); perforated or expanded steel sheet with a non-skid surface (non-serrated) concentrated load capacity = 500 lbs. with 6'-0" clear span.

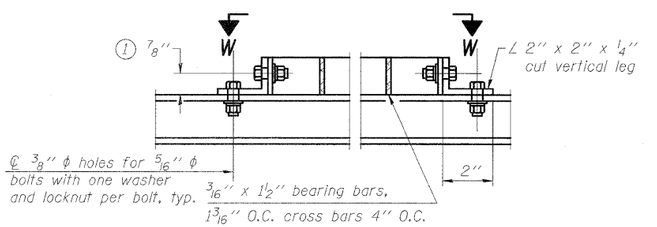

WELDED BAR GRATING DETAILS

NOTES

1. Drilling holes in grating may be done in shop or field, based on Contractor's preference and subject to accurate alignment. Field drilled holes must be touched up with galvanized paint.
2. Horizontal rail member shall be continuous thru 1 1/4" ϕ pipe. Provide 7/16" ϕ hole in 1 1/4"ϕ pipe for 3/8" ϕ bolt. Field drill 7/16" ϕ hole in horizontal rail member. Provide washer and locknut for bolt. (Use 5/16" eyebolts in 7/16" ϕ holes on top rail at ends only.)
3. Install standard force-fit end caps or weld 1/8" end plates with 1/8" c.f.w. and grind smooth. (All rail ends.)
4. 3/8" (±1/4") gap between grating panels at splice.
5. Chain to be type 304L stainless steel suitable for prolonged exterior exposure. Approximately 3'-6" long chain per location. Maximum sag with handrail erected = 4".
6. PL 1/8" x 1/2" x 2" welded to handrail posts to protect locations that contact grating.
7. Extrusions may be used in lieu of details shown, with approval by Engineer.
8. Field cut ends of light support channels shall be free of burrs or hazardous projections and coated with zinc-rich primer or equivalent.

BM-4
1-20-11

FILE NAME = $FILEL$	USER NAME = $USER$	DESIGNED - ---	REVISED - ---	STATE OF ILLINOIS DEPARTMENT OF TRANSPORTATION	BRIDGE MOUNT SIGN STRUCTURES WALKWAY DETAILS	F.A.P RTE.	SECTION	COUNTY	TOTAL SHEETS / SHEET NO.
		DRAWN - ---	REVISED - ---			310	60-15SG	MADISON	54 / 40
	PLOT SCALE = $SCALE$	CHECKED - ---	REVISED - ---					CONTRACT NO. 76E76	
	PLOT DATE = $DATE$	DATE - _____	REVISED - ---		SCALE: _____ SHEET NO. __ OF ___ SHEETS STA. _____ TO STA. _____	FED. ROAD DIST. NO. _	ILLINOIS	FED. AID PROJECT	