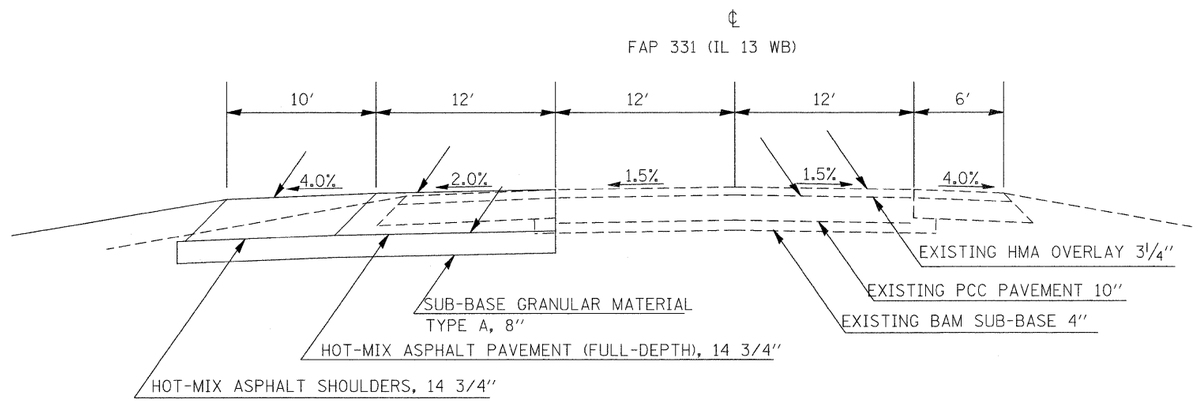

TO BE USED
STA 592+90 TO STA 615+00

PAVING DETAIL
FULL - DEPTH PAVEMENT

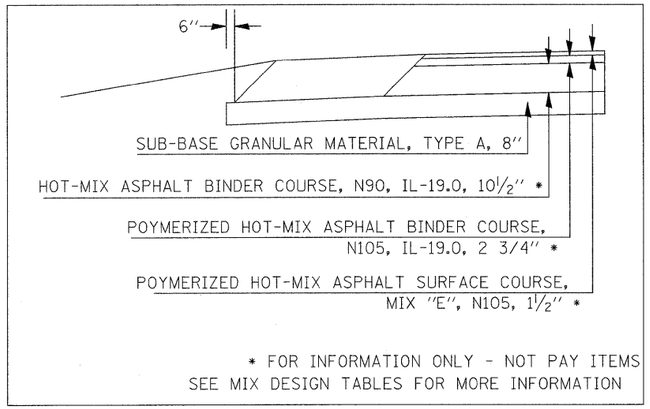

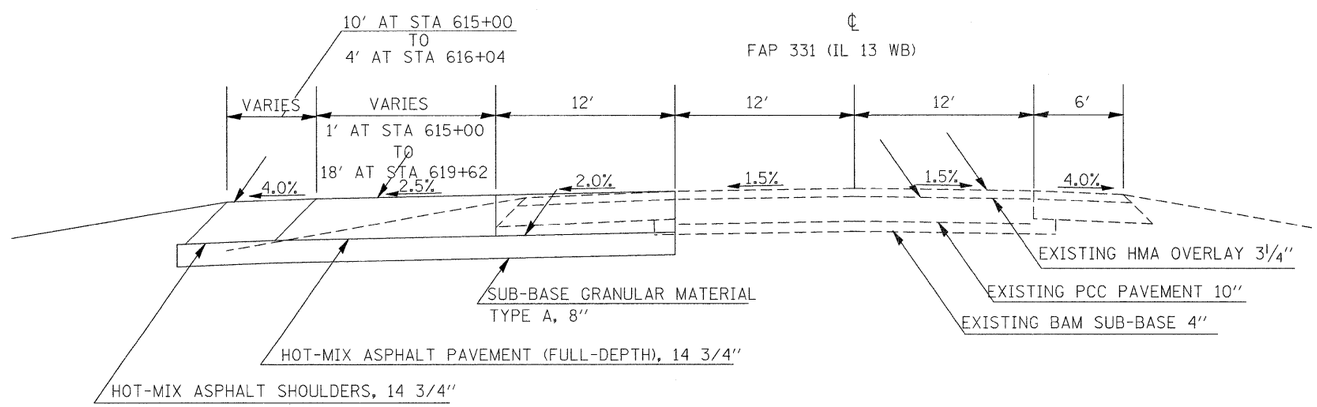

TO BE USED
STA 615+00 TO STA 619+62

⚠ REVISED SHEET 4/14/11

FILE NAME = c:\pw_work\pwidot\russellcf\d0135592\78133-sht-typ.dgn	USER NAME = russellcf	DESIGNED -	REVISED -	STATE OF ILLINOIS DEPARTMENT OF TRANSPORTATION	TYPICAL SECTIONS IL 13 WESTBOUND	F.A.P. RTE. 331	SECTION (I-3,I-2)N-1,TS-1	COUNTY WILLIAMSON	TOTAL SHEETS 251	SHEET NO. 13
		DRAWN -	REVISED -					CONTRACT NO. 78133		
	PLOT SCALE = 4.5000 ′ / IN.	CHECKED -	REVISED -							
	PLOT DATE = 4/12/2011	DATE -	REVISED -		SCALE: SHEET NO. OF SHEETS STA. TO STA.		ILLINOIS FED. AID PROJECT			