F.A.P. RTE.	SECTION	COUNTY	TOTAL SHEETS	SHEET NO.
800	(28X-1,29X-1)HSIP22-2	CHAMPAIGN	51	1
	ILLINOIS	CONTRACT NO. 70F56		

FOR INDEX OF SHEETS, SEE SHEET NO. 2
FOR SUMMARY OF QUANTITIES, SEE SHEETS NO. 3 AND 4

STATE OF ILLINOIS 04-29-2022 LETTING ITEM 047

DEPARTMENT OF TRANSPORTATION

PROPOSED HIGHWAY PLANS

FAP ROUTE 800 (US 45)
SECTION (28X-1,29X-1)HSIP22-2
PROJECT HSIP-JCAJ(522)
NEW SHOULDERS MILLED RUMBLE STRIP
CHAMPAIGN COUNTY

C-95-072-21

SALINE BRANCH DITCH TO 0.3 MI N OF OLYMPIAN RD

D-95-054-21

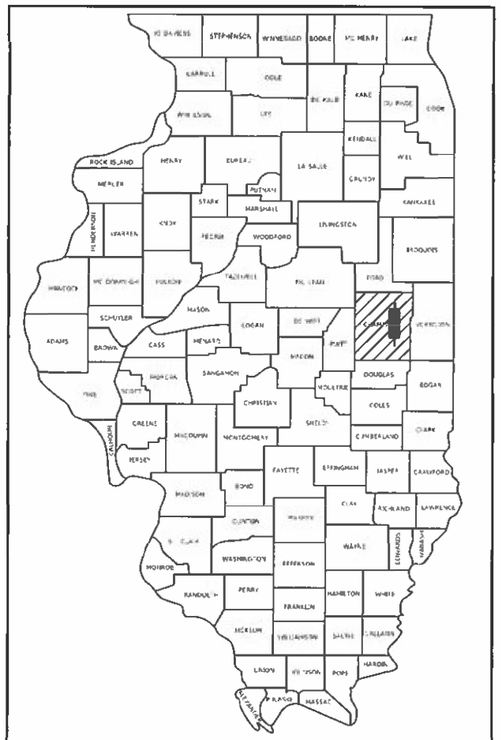

LOCATION OF SECTION INDICATED THUS:

TRAFFIC DATA

FAP RTE. 800 / (US 45)

	LEG A	LEG B
2021 ADT =	8,450	7,950
PV % =	91.1%	93.1%
SU % =	5.6%	4.1%
MU % =	3.3%	2.8%

TRAFFIC DATA LOCATIONS

LEG "A" = S.N. 010-2024 TO LEVERETT RD
LEG "B" = LEVERETT RD TO 0.3 MI N OF OLYMPIAN RD

FUNCTIONAL CLASSIFICATION

OTHER PRINCIPAL ARTERIAL

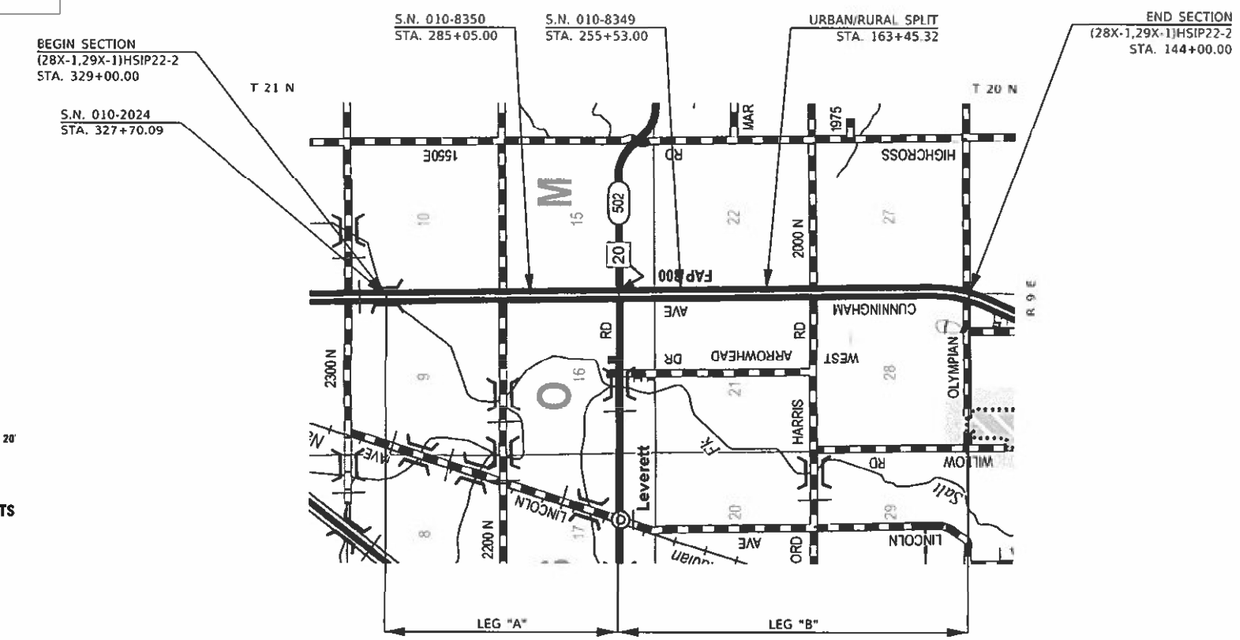

0 1 2 3 4 5 Miles
0 5,000 10,000 15,000 20,000 25,000 Feet

GROSS LENGTH = 18,500.00 FT. = 3.504 MILE
NET LENGTH = 18,500.00 FT. = 3.504 MILE

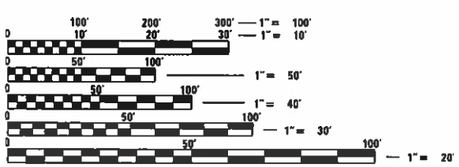

FULL SIZE PLANS HAVE BEEN PREPARED USING STANDARD ENGINEERING SCALES. REDUCED SIZED PLANS WILL NOT CONFORM TO STANDARD SCALES. IN MAKING MEASUREMENTS ON REDUCED PLANS, THE ABOVE SCALES MAY BE USED.

J.U.L.I.E.
JOINT UTILITY LOCATION INFORMATION FOR EXCAVATORS
1-800-892-0123 TOWNSHIP
OR 811 SOMER

PROJECT ENGINEER: RYAN T. CARROLL
DESIGNER: TYLER J. PIERSON
PHONE: (217)-465-4181

CONTRACT NO. 70F56

STATE OF ILLINOIS
DEPARTMENT OF TRANSPORTATION

SUBMITTED 1/24 2022
Kenrick Garnett SWN
REGIONAL ENGINEER

March 25 2022
ENGINEER OF DESIGN AND ENVIRONMENT

March 29 2022
Stephen M Travis
DIRECTOR OF HIGHWAYS PROJECT IMPLEMENTATION

PRINTED BY THE AUTHORITY OF THE STATE OF ILLINOIS

INDEX OF SHEETS

DESCRIPTION	SHEET NO.
COVER SHEET	1
INDEX OF SHEETS, GENERAL NOTES, LIST OF HIGHWAY STANDARDS, & COMMITMENTS	2
SUMMARY OF QUANTITIES	3 to 4
TYPICAL CROSS-SECTIONS	5 to 7
SCHEDULES OF QUANTITIES	8 to 9
CONTROL POINTS	10
FAP 800 (US 45) PLAN SHEETS	11 to 17
TYPICAL ENTRANCE DETAILS	18 to 19
DISTRICT 5 DETAIL - FIELD ENTRANCES (NONCOMMERCIAL RURAL)	20 to 21
DISTRICT 5 DETAIL - MAILBOX TURNOUT (RURAL)	22
DISTRICT 5 DETAIL - PRIVATE COMMERCIAL ENTRANCES (NONCOMMERCIAL AND COMMERCIAL RURAL)	23 to 24
DISTRICT 5 DETAIL - SURVEY MONUMENT COVER ASSEMBLY	25
FAP 800 (US 45) CROSS-SECTIONS	26 to 51

LIST OF STANDARDS

STANDARD NO.	DESCRIPTION
000001-08	STANDARD SYMBOLS, ABBREVIATIONS AND PATTERNS
001006	DECIMAL OF AN INCH AND OF A FOOT
642006-01	SHOULDER RUMBLE STRIPS, 8 IN.
701101-05	OFF-ROAD OPERATIONS, MULTILANE, 15' (4.5 M) TO 24" (600 MM) FROM PAVEMENT
701106-02	OFF-ROAD OPERATIONS, MULTILANE, MORE THAN 15' (4.5 M) AWAY
701421-08	LANE CLOSURE, MULTILANE, DAY OPERATIONS ONLY, FOR SPEEDS > 45 MPH TO 55
701426-09	LANE CLOSURE, MULTILANE, INTERMITTENT OR MOVING OPERATION, FOR SPEEDS > 45 MPH
701901-08	TRAFFIC CONTROL DEVICES

GENERAL NOTES

G.N. – 100B
MICROSTATION AND GEOPAK FILES OF THIS PROJECT WILL BE MADE AVAILABLE TO THE CONTRACTOR AFTER CONTRACT AWARD. IF THERE IS A CONFLICT BETWEEN THE ELECTRONIC FILES AND THE PRINTED CONTRACT PLANS AND DOCUMENTS, THE PRINTED CONTRACT PLANS AND DOCUMENTS SHALL TAKE PRECEDENCE OVER THE ELECTRONIC FILES. THE CONTRACTOR SHALL ACCEPT ALL RISK ASSOCIATED WITH USING THE ELECTRONIC FILES AND SHALL HOLD THE DEPARTMENT HARMLESS FOR ANY ERRORS OR OMISSIONS IN THE ELECTRONIC FILES AND THE DATA CONTAINED THEREIN. ERRORS OR DELAYS RESULTING FROM THE USE OF THE ELECTRONIC FILES BY THE CONTRACTOR SHALL NOT RESULT IN AN EXTENSION OF TIME FOR ANY INTERIM OR FINAL COMPLETION DATE OR SHALL NOT BE CONSIDERED CAUSE FOR ADDITIONAL COMPENSATION. THE CONTRACTOR SHALL NOT USE, SHARE, OR DISTRIBUTE THESE ELECTRONIC FILES EXCEPT FOR THE PURPOSE OF CONSTRUCTING THIS CONTRACT. ANY CLAIMS BY THIRD PARTIES DUE TO USE OR ERRORS SHALL BE THE SOLE RESPONSIBILITY OF THE CONTRACTOR. THE CONTRACTOR SHALL INCLUDE THIS DISCLAIMER WITH THE TRANSFER OF THESE ELECTRONIC FILES TO ANY OTHER PARTIES AND SHALL INCLUDE APPROPRIATE LANGUAGE BINDING THEM TO SIMILAR RESPONSIBILITIES.

G.N.-105.09A
ALL ELEVATIONS SHOWN IN THE PLANS ARE BASED ON NORTH AMERICAN VERTICAL DATUM OF 1988. (NAVD 88)

G.N. -406H

MIXTURE REQUIREMENTS

THE FOLLOWING MIXTURE REQUIREMENTS ARE APPLICABLE FOR THIS PROJECT:

Location	US 45	US 45	US 45
Mixture Use	Binder Bottom 6 1/2" of Shld	Surface Top 1 1/2" of Shld	Incidental
AC/PG	PG 64-22	PG 64-22	PG 64-22
Design Air Voids	4.0% @ Ndes=50	4.0% @ Ndes=50	4.0% @ Ndes=50
Mix Comp(Gradation)	IL 19.0	IL 9.5	IL 9.5
Friction Aggregate	N.A.	Mix C	Mix C
Mixture Weight	112	112	112
Quality Management Program	QC/QA	QC/QA	QC/QA
Sublot Size	N.A.	N.A.	N.A.
Material Transfer Device (Required ?)	NO	NO	NO

COMMITMENTS

THERE ARE NO COMMITMENTS FOR THIS CONTRACT.

SUMMARY OF QUANTITIES

LOCATION OF WORK:	FAP 800 (US 45) OTHER PRINCIPAL ARTERIAL	FAP 800 (US 45) OTHER PRINCIPAL ARTERIAL
	URBAN	RURAL
	STA. 144+00.00	STA. 163+45.32
	STA. 163+45.32	329+00.00
	CHAMPAIGN	CHAMPAIGN
FUNDING BREAKOUT:	90% FED / 10% STATE	90% FED / 10% STATE
CONSTRUCTION TYPE CODE:	0021	0021

	CODE NO.		ITEM	UNIT	TOTAL QUANTITY	SHOULDER QUANTITY	SHOULDER QUANTITY
	20200100		EARTH EXCAVATION	CU YD	3,100.00	375.00	2,725.00
	40600290		BITUMINOUS MATERIALS (TACK COAT)	POUND	5,271.00	567.00	4,704.00
	40800029		BITUMINOUS MATERIALS (TACK COAT)	POUND	240.00	114.00	126.00
	40800050		INCIDENTAL HOT-MIX ASPHALT SURFACING	TON	46.00	22.00	24.00
	44000100		PAVEMENT REMOVAL	SQ YD	581.00	89.00	492.00
	48102100		AGGREGATE WEDGE SHOULDER, TYPE B	TON	4.00	1.00	3.00
	48203029		HOT-MIX ASPHALT SHOULDERS, 8"	SQ YD	15,443.00	1,730.00	13,713.00
	64200108		SHOULDER RUMBLE STRIPS, 8 INCH	FOOT	35,842.00	3,522.00	32,320.00
*	66900200		NON-SPECIAL WASTE DISPOSAL	CU YD	1,250.00	125.00	1,125.00
*	66900530		SOIL DISPOSAL ANALYSIS	EACH	4.00	0.40	3.60
*	66901001		REGULATED SUBSTANCES PRE-CONSTRUCTION PLAN	L SUM	1.00	0.10	0.90
*	66901003		REGULATED SUBSTANCES FINAL CONSTRUCTION REPORT	L SUM	1.00	0.10	0.90
*	66901006		REGULATED SUBSTANCES MONITORING	CAL DA	2.00	0.20	1.80
	67100100		MOBILIZATION	L SUM	1.00	0.10	0.90

* DENOTES SPECIALTY ITEM

MODEL: $MODEL$NAME$
FILE NAME: pw:\\ildot-pw.bentley.com:PWIDOT\Documents\IDOT Offices\District 5\Projects\D570F56\CADData\CADsheets\D570F56-sht-SOQ.dgn

USER NAME = PiersonTJ	DESIGNED -	REVISED -
	DRAWN -	REVISED -
PLOT SCALE = 40.0000 ' / in.	CHECKED -	REVISED -
PLOT DATE = 1/24/2022	DATE -	REVISED -

STATE OF ILLINOIS
DEPARTMENT OF TRANSPORTATION

SUMMARY OF QUANTITIES

SCALE: | SHEET 1 OF 2 SHEETS | STA. TO STA.

F.A.P. RTE.	SECTION	COUNTY	TOTAL SHEETS	SHEET NO.
800	*	CHAMPAIGN	51	3
		CONTRACT NO. 70F56		
		ILLINOIS	FED. AID PROJECT	

* (28-X1, 29-X1)HSIP 22-2

REV. 2/14/22

SUMMARY OF QUANTITIES

LOCATION OF WORK:	FAP 800 (US 45) OTHER PRINCIPAL ARTERIAL URBAN STA. 144+00.00 STA. 163+45.32 CHAMPAIGN	FAP 800 (US 45) OTHER PRINCIPAL ARTERIAL RURAL STA. 163+45.32 329+00.00 CHAMPAIGN
FUNDING BREAKOUT:	90% FED / 10% STATE	90% FED / 10% STATE
CONSTRUCTION TYPE CODE:	0021	0021

	CODE NO.		ITEM	UNIT	TOTAL QUANTITY	SHOULDER QUANTITY	SHOULDER QUANTITY
	70100310		TRAFFIC CONTROL AND PROTECTION, STANDARD 701421	L SUM	1.00	0.10	0.90
	X4400196		HOT-MIX ASPHALT SURFACE REMOVAL, SPECIAL	SQ YD	532.00	253.00	279.00
	Z0013798		CONSTRUCTION LAYOUT	L SUM	1.00	0.10	0.90
*	Z0070100		SURVEY MONUMENT COVER ASSEMBLY	EACH	2.00		2.00

* DENOTES SPECIALTY ITEM

USER NAME = PiersonTJ	DESIGNED -	REVISED -	STATE OF ILLINOIS DEPARTMENT OF TRANSPORTATION
	DRAWN -	REVISED -	
PLOT SCALE = 40.0000 ' / in.	CHECKED -	REVISED -	
PLOT DATE = 1/24/2022	DATE -	REVISED -	

SUMMARY OF QUANTITIES

SCALE: SHEET 2 OF 2 SHEETS STA. TO STA.

F.A.P. RTE.	SECTION	COUNTY	TOTAL SHEETS	SHEET NO.
800	*	CHAMPAIGN	51	4
		CONTRACT NO. 70F56		
		ILLINOIS FED. AID PROJECT		

* (28-X1, 29-X1)HSIP 22-2

REV. 2/14/22

MODEL: $MODEL$NAME
FILE NAME: pw:\\ildot-pw.bentley.com:PWIDOT\Documents\IDOT Offices\District 5\Projects\0570F56\CADData\CADsheets\0570F56-sht-SOQ.dgn

① EXISTING TYPICAL CROSS SECTION

STATION	TO	STATION
144+00.00		177+72.05 ②
② 186+19.76		243+56.76 ③
③ 252+47.90		283+78.61 ②
② 293+35.55		329+00.00

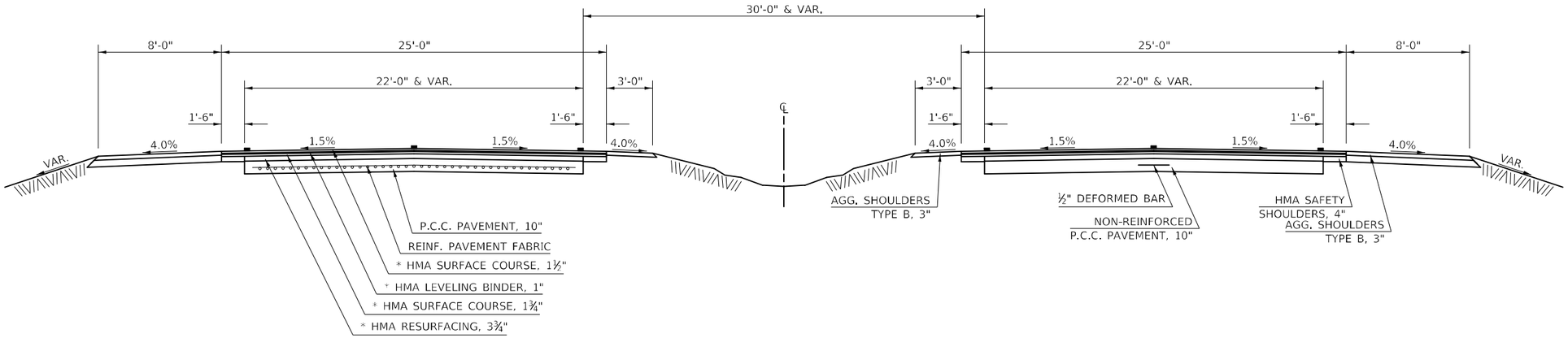

* SOUTHBOUND HMA OVERLAYS ARE APPROXIMATELY 4" THICK TOTAL

① PROPOSED TYPICAL CROSS SECTION

STATION	TO	STATION
144+00.00		177+72.05 ②
② 186+19.76		243+56.76 ③
③ 252+47.90		283+78.61 ②
② 293+35.55		329+00.00

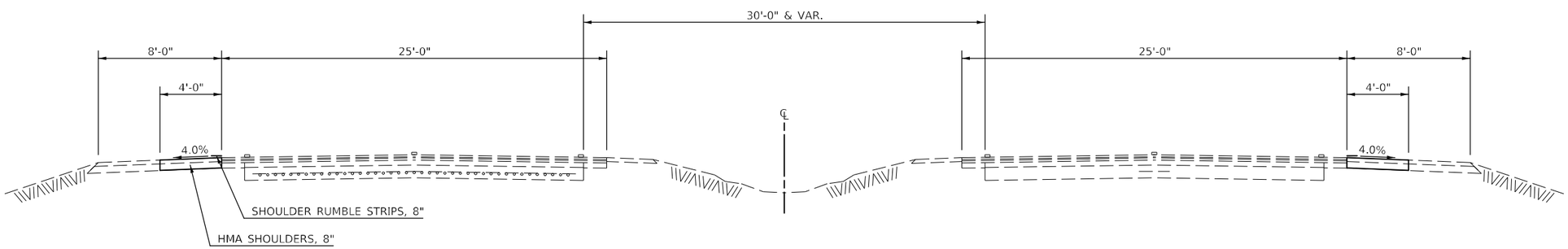

MODEL: $MODELNAME
FILE NAME: pw:\\ildot-pw.bentley.com:PWIDOT\Documents\IDOT Offices\District 5\Projects\D570F56\CADData\CADsheets\D570F56-Ill-Typical Cross-Sections.dgn

USER NAME = PiersonTJ	DESIGNED -	REVISED -	
	DRAWN -	REVISED -	
PLOT SCALE = 8.0000 ' / in.	CHECKED -	REVISED -	
PLOT DATE = 1/24/2022	DATE -	REVISED -	

STATE OF ILLINOIS
DEPARTMENT OF TRANSPORTATION

FAP 800 (US 45) TYPICAL CROSS-SECTIONS

SCALE: N.T.S. | SHEET 1 OF 3 SHEETS | STA. TO STA.

F.A.P. RTE.	SECTION	COUNTY	TOTAL SHEETS	SHEET NO.
800	*	CHAMPAIGN	51	5
		CONTRACT NO. 70F56		
		ILLINOIS	FED. AID PROJECT	

* (28-X1, 29-X1)HSIP 22-2

SB LTL FROM STA. 182+57.76 TO STA. 185+53.39
SB LTL FROM STA. 288+86.43 TO STA. 292+53.52

NB LTL FROM STA. 178+21.98 TO STA. 181+27.15
NB LTL FROM STA. 284+08.23 TO STA. 287+63.10

② EXISTING TYPICAL CROSS SECTION

STATION	TO	STATION
① 177+72.05		186+19.76 ①
① 283+78.61		293+35.55 ①

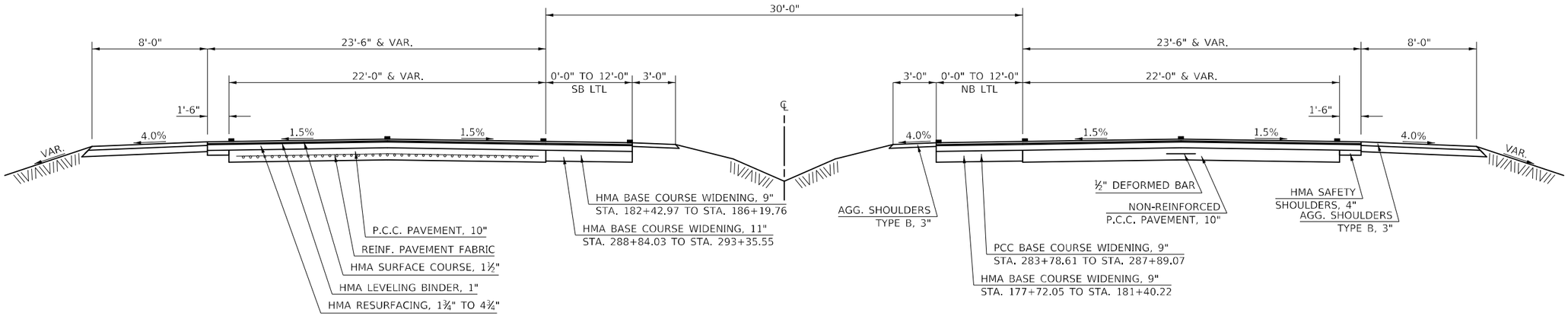

② PROPOSED TYPICAL CROSS SECTION

STATION	TO	STATION
① 177+72.05		186+19.76 ①
① 283+78.61		293+35.55 ①

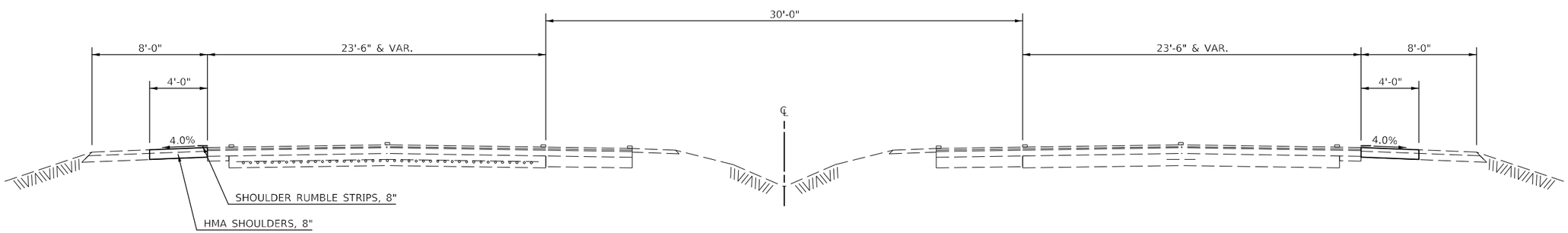

MODEL: $MODELNAME$
FILE NAME: pw:\\ildot-pw.bentley.com:PWIDOT\Documents\IDOT Offices\District 5\Projects\D570F56\CADData\CADsheets\D570F56-Ill-Typical Cross-Sections.dgn

USER NAME = PiersonTJ	DESIGNED -	REVISED -	
	DRAWN -	REVISED -	
PLOT SCALE = 8.0000 ' / in.	CHECKED -	REVISED -	
PLOT DATE = 1/24/2022	DATE -	REVISED -	

STATE OF ILLINOIS
DEPARTMENT OF TRANSPORTATION

FAP 800 (US 45) TYPICAL CROSS-SECTIONS

SCALE: N.T.S. | SHEET 2 OF 3 SHEETS | STA. TO STA.

F.A.P. RTE.	SECTION	COUNTY	TOTAL SHEETS	SHEET NO.
800	*	CHAMPAIGN	51	6
		CONTRACT NO. 70F56		
		ILLINOIS	FED. AID PROJECT	

* (28-X1, 29-X1)HSIP 22-2

SB LTL FROM STA. 248+77.69 TO STA. 251+84.22
SB LTL FROM STA. 249+07.91 TO STA. 251+50.11

NB LTL FROM STA. 244+49.14 TO STA. 247+70.45

③ EXISTING TYPICAL CROSS SECTION

LEVERETT ROAD INTERSECTION

STATION	TO	STATION
① 243+56.76		252+47.90 ①

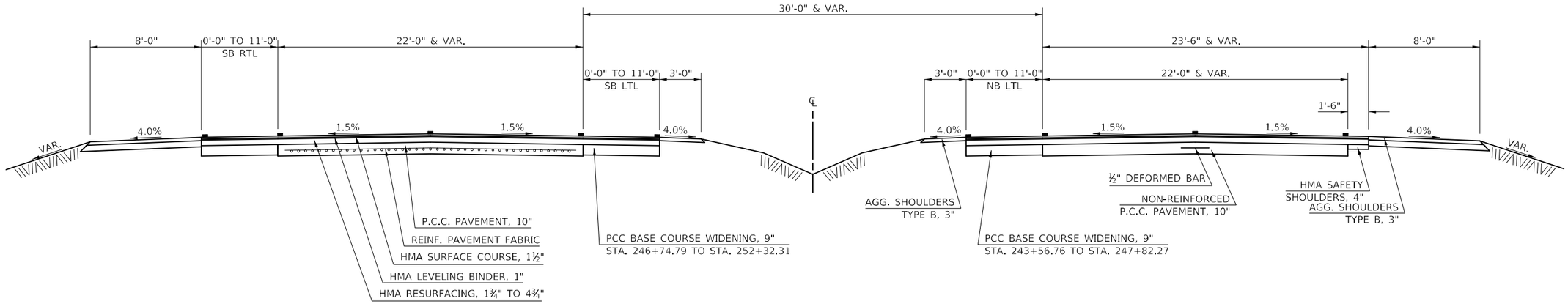

SB LTL FROM STA. 248+77.69 TO STA. 251+84.22
SB LTL FROM STA. 249+07.91 TO STA. 251+50.11

NB LTL FROM STA. 244+49.14 TO STA. 247+70.45

③ PROPOSED TYPICAL CROSS SECTION

LEVERETT ROAD INTERSECTION

STATION	TO	STATION
① 243+56.76		252+47.90 ①

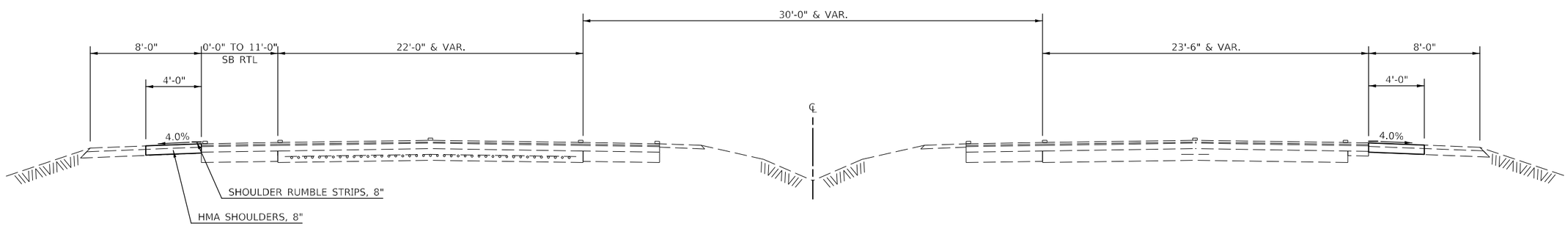

MODEL: $MODEL NAME$
FILE NAME: pw:\\ildot-pw.bentley.com:PWIDOT\Documents\IDOT Offices\District 5\Projects\D570F56\CADData\CADsheets\D570F56-sht-Typical Cross-Sections.dgn

USER NAME = PiersonTJ	DESIGNED -	REVISED -	
	DRAWN -	REVISED -	
PLOT SCALE = 8.0000 ' / in.	CHECKED -	REVISED -	
PLOT DATE = 1/24/2022	DATE -	REVISED -	

STATE OF ILLINOIS
DEPARTMENT OF TRANSPORTATION

FAP 800 (US 45) TYPICAL CROSS-SECTIONS

SCALE: N.T.S. | SHEET 3 OF 3 SHEETS | STA. | TO STA.

F.A.P. RTE.	SECTION	COUNTY	TOTAL SHEETS	SHEET NO.
800	*	CHAMPAIGN	51	7
		CONTRACT NO. 70F56		
		ILLINOIS	FED. AID PROJECT	

* (28-X1, 29-X1)HSIP 22-2

SCHEDULE OF QUANTITIES

NB EARTHWORK SCHEDULE

STA	TO	STA	LENGTH FT	OMISSION REASON	AVERAGE CUT AREA SQ FT	AVERAGE FILL AREA SQ FT	20200100 EARTH EXCAVATION CU YD URBAN	20200100 EARTH EXCAVATION CU YD RURAL	EARTH EXCAVATION ADJ. FOR SHRINKAGE (75%) CU YD	TOTAL EMBANKMENT CU YD	EARTHWORK BALANCE WASTE (+) SHORTAGE (-) CU YD
140+00.00	TO	155+49.67	1,549.67	F.E. #002	2.52	0.16	144.64	0.00	108.48	9.18	99.30
155+76.27	TO	161+06.49	530.22	C.E. #001	2.57	0.10	50.47	0.00	37.85	1.96	35.89
162+83.92	TO	163+45.32	61.40	URBAN/RURAL SPLIT	2.45	0.26	5.57	0.00	4.18	0.59	3.59
163+45.32	TO	164+92.94	147.62	C.E. #002	2.49	0.20	0.00	13.61	10.21	1.09	9.12
166+05.25	TO	168+71.19	265.94	C.E. #003	2.63	0.03	0.00	25.90	19.43	0.30	19.13
169+17.38	TO	169+33.17	15.79	C.E. #004 P.E. #001	2.66	0.00	0.00	1.56	1.17	0.00	1.17
170+64.30	TO	170+70.84	6.54	P.E #002	2.27	0.42	0.00	0.55	0.41	0.10	0.31
171+07.29	TO	175+16.36	409.07	P.E #003 P.E. #004	2.46	0.27	0.00	37.27	27.95	4.09	23.86
176+53.55	TO	177+51.86	98.31	P.E. #005	2.63	0.01	0.00	9.58	7.19	0.04	7.15
177+87.54	TO	178+11.31	23.77	P.E. #006	3.21	0.00	0.00	2.83	2.12	0.00	2.12
178+82.67	TO	179+03.79	21.12	P.E. #007	3.45	0.00	0.00	2.70	2.03	0.00	2.03
179+66.69	TO	181+63.49	196.80	E FORD HARRIS RD	2.52	0.14	0.00	18.37	13.78	1.02	12.76
182+19.60	TO	195+23.60	1,304.00	F.E. #003	2.42	0.31	0.00	116.88	87.66	14.97	72.69
195+48.85	TO	208+35.54	1,286.69	F.E. #005	2.47	0.23	0.00	117.71	88.28	10.96	77.32
208+60.40	TO	221+64.43	1,304.03	F.E. #007	2.45	0.26	0.00	118.33	88.75	12.56	76.19
221+88.30	TO	234+87.21	1,298.91	F.E. #008	2.50	0.18	0.00	120.27	90.20	8.66	81.54
235+13.00	TO	236+28.09	115.09	P.E. #008	2.61	0.04	0.00	11.13	8.35	0.17	8.18
236+62.99	TO	241+16.36	453.37	P.E. #009	2.57	0.09	0.00	43.15	32.36	1.51	30.85
241+68.18	TO	247+31.51	563.33	E LEVERETT RD	2.55	0.10	0.00	53.20	39.90	2.09	37.81
249+45.47	TO	261+56.09	1,210.62	F.E. #011	2.52	0.17	0.00	112.99	84.74	7.62	77.12
261+89.38	TO	274+63.91	1,274.53	F.E. #012	2.57	0.09	0.00	121.32	90.99	4.25	86.74
274+94.38	TO	287+91.96	1,297.58	CR 2200 N	2.10	0.02	0.00	100.92	75.69	0.96	74.73
288+51.46	TO	299+81.41	1,129.95	P.E. #012	2.46	0.15	0.00	102.95	77.21	6.28	70.93
300+11.95	TO	314+51.95	1,440.00	F.E. #016	2.47	0.25	0.00	131.73	98.80	13.33	85.47
314+79.68	TO	321+94.95	715.27	F.E. #017	2.43	0.34	0.00	64.37	48.28	9.01	39.27
322+38.33	TO	329+00.00	661.67	END SECTION	2.51	0.18	0.00	61.51	46.13	4.41	41.72
				NORTHBOUND URBAN/RURAL TOTALS =			200.68	1,388.83			
				NORTHBOUND TOTALS =			1,589.51		1,192.13	115.15	1,076.98

MATERIAL REMOVAL REQUIRED FOR SHOULDER INSTALLATION INCLUDED IN THE COST OF PAVEMENT REMOVAL.

SB EARTHWORK SCHEDULE

STA	TO	STA	LENGTH FT	OMISSION REASON	AVERAGE CUT AREA SQ FT	AVERAGE FILL AREA SQ FT	20200100 EARTH EXCAVATION CU YD URBAN	20200100 EARTH EXCAVATION CU YD RURAL	EARTH EXCAVATION ADJ. FOR SHRINKAGE (75%) CU YD	TOTAL EMBANKMENT CU YD	EARTHWORK BALANCE WASTE (+) SHORTAGE (-) CU YD
144+00.00	TO	155+48.27	1,148.27	F.E. #001	2.41	0.33	102.49	0.00	76.87	14.03	62.84
155+78.82		163+45.32	766.50	URBAN/RURAL SPLIT	2.45	0.27	69.55	0.00	52.16	7.67	44.49
163+45.32		181+54.75	1,809.43	E FORD HARRIS RD	2.41	0.34	0.00	161.51	121.13	22.79	98.34
182+24.55		208+21.70	2,597.15	F.E. #004	2.45	0.27	0.00	235.67	176.75	25.97	150.78
208+52.88		221+60.76	1,307.88	F.E. #006	2.48	0.22	0.00	120.13	90.10	10.66	79.44
221+92.41		236+19.83	1,427.42	MAILBOX TURNOUT	2.60	0.06	0.00	137.46	103.10	3.17	99.93
236+84.67		241+27.21	442.54	F.E. #009	2.51	0.19	0.00	41.14	30.86	3.11	27.75
241+53.99		247+48.00	594.01	E LEVERETT RD	2.50	0.20	0.00	55.00	41.25	4.40	36.85
248+74.09		248+87.61	13.52	PAVEMENT REMOVAL	2.35	0.43	0.00	1.18	0.89	0.22	0.67
249+07.91		253+10.36	402.45	EXISTING SHOULDERS	2.38	0.38	0.00	35.48	26.61	5.66	20.95
259+24.92		261+48.87	223.95	F.E. #010	2.45	0.27	0.00	20.32	15.24	2.24	13.00
261+86.05		282+52.57	2,066.52	EXISTING SHOULDERS	2.52	0.17	0.00	192.88	144.66	13.01	131.65
289+49.29		291+29.32	180.03	F.E. #014	2.57	0.13	0.00	17.14	12.86	0.87	11.99
291+66.79		325+31.16	3,364.37	END SECTION	2.52	0.18	0.00	314.01	235.51	22.43	213.08
				SOUTHBOUND URBAN/RURAL TOTALS =			172.04	1,331.92			
				SOUTHBOUND TOTALS =			1,503.96		1,127.97	136.23	991.74
				URBAN/RURAL TOTALS =			372.72	2,720.75			
				ROUNDED URBAN/RURAL TOTALS =			375.00	2,725.00			
				TOTALS =			3,100.00		2,320.10	251.38	2,068.72

MATERIAL REMOVAL REQUIRED FOR SHOULDER INSTALLATION INCLUDED IN THE COST OF PAVEMENT REMOVAL.

INCIDENTAL HMA SCHEDULE

STA	DIRECTION	URBAN RURAL	LOCATION	ENTRANCE MATERIAL	APRON MATERIAL	RESURFACING AREA SQ FT	AVERAGE HMA THICKNESS IN	40800029 BIT MATL (TACK COAT) POUND URBAN	40800029 BIT MATL (TACK COAT) POUND RURAL	40800050 INCIDENTAL HMA SURFACING TON URBAN	40800050 INCIDENTAL HMA SURFACING TON RURAL	X4400196 HMA SURFACE REMOVAL SPECIAL SQ YD URBAN	X4400196 HMA SURFACE REMOVAL SPECIAL SQ YD RURAL
162+01.33	NB	URBAN	C.E. #001	HMA	HMA	2,276.23	1.50	113.81	0.00	21.24	0.00	252.91	0.00
165+73.00	NB	RURAL	C.E. #002	PCC	HMA	240.36	1.50	0.00	12.02	0.00	2.24	0.00	26.71
168+98.05	NB	RURAL	C.E. #003	HMA	HMA	119.16	1.50	0.00	5.96	0.00	1.11	0.00	13.24
170+02.13	NB	RURAL	C.E. #004	HMA	HMA	273.02	1.50	0.00	13.65	0.00	2.55	0.00	30.34
170+44.00	NB	RURAL	P.E. #001	AGG	HMA	82.91	1.50	0.00	4.15	0.00	0.77	0.00	9.21
170+93.08	NB	RURAL	P.E. #002	AGG	HMA	106.67	1.50	0.00	5.33	0.00	1.00	0.00	11.85
175+31.87 176+22.82	NB	RURAL	P.E. #003 P.E. #004	AGG	HMA	392.45	1.50	0.00	19.62	0.00	3.66	0.00	43.61
177+71.47	NB	RURAL	P.E. #005	AGG	HMA	95.90	1.50	0.00	4.80	0.00	0.90	0.00	10.66
178+38.52	NB	RURAL	P.E. #006	AGG	HMA	132.77	1.50	0.00	6.64	0.00	1.24	0.00	14.75
179+22.05	NB	RURAL	P.E. #007	AGG	HMA	233.93	1.50	0.00	11.70	0.00	2.18	0.00	25.99
236+48.35	NB	RURAL	P.E. #008	AGG	HMA	49.63	1.50	0.00	2.48	0.00	0.46	0.00	5.51
236+52.25	SB	RURAL	MAILEOX TURNOUT	HMA		178.45	1.50	0.00	8.92	0.00	1.67	0.00	19.83
241+35.60	NB	RURAL	P.E. #009	AGG	HMA	115.81	1.50	0.00	5.79	0.00	1.08	0.00	12.87
291+50.32	SB	RURAL	F.E. #014	GRASS	HMA	117.29	1.50	0.00	5.86	0.00	1.09	0.00	13.03
299+95.86	NB	RURAL	P.E. #010	AGG	HMA	372.18	1.50	0.00	18.61	0.00	3.47	0.00	41.35
							URBAN/RURAL TOTALS=	113.81	125.53	21.24	23.42	252.91	278.95
							ROUNDED URBAN/RURAL TOTALS=	114.00	126.00	22.00	24.00	253.00	279.00
							TOTALS=	240.00		46.00		532.00	

NB HMA SHOULDER SCHEDULE

STA	TO	STA	LENGTH FT	OMISSION REASON	AVERAGE WIDTH FT	SHOULDER AREA SQ FT	URBAN RURAL	40600290 BIT MATL (TACK COAT) POUND URBAN	40600290 BIT MATL (TACK COAT) POUND RURAL	48203029 HMA SHOULDER 8" SQ YD URBAN	48203029 HMA SHOULDER 8" SQ YD RURAL
144+00.00	TO	163+45.32	1945.32	URBAN/RURAL SPLIT	4.00	7,781.28	URBAN	194.53	0.00	864.59	0.00
163+45.32	TO	181+69.42	1824.10	E FORD HARRIS RD	4.00	7,296.40	RURAL	0.00	182.41	0.00	810.71
182+13.12	TO	247+49.53	6536.41	E LEVERETT RD	4.00	26,145.64	RURAL	0.00	653.64	0.00	2,905.07
249+19.64	TO	282+02.44	3282.80		4.00	13,131.20	RURAL	0.00	328.28	0.00	1,459.02
282+02.44	TO	287+69.62	567.18		2.50	1,417.95	RURAL	0.00	35.45	0.00	157.55
287+69.62	TO	287+83.70	14.08		3.42	48.15	RURAL	0.00	1.20	0.00	5.35
287+83.70	TO	287+97.84	14.14	CR 2200 N	4.32	61.08	RURAL	0.00	1.53	0.00	6.79
288+43.36	TO	329+00.00	4056.64	END SECTION	4.00	16,226.56	RURAL	0.00	405.66	0.00	1,802.95
						URBAN/RURAL NORTHBOUND TOTALS =		194.53	1,608.17	864.59	7,147.44
						ROUNDED URBAN/RURAL NORTHBOUND TOTALS =		195.00	1,609.00	865.00	7,148.00
						ROUNDED NORTHBOUND TOTALS =		1,804.00		8,013.00	

40600290 QUANTITIES CONTINUE IN SHOULDER RUMBLE STRIP8" SCHEDULE

SB HMA SHOULDER SCHEDULE

STA	TO	STA	LENGTH FT	OMISSION REASON	WIDTH FT	SHOULDER AREA SQ FT	URBAN RURAL	40600290 BIT MATL (TACK COAT) POUND URBAN	40600290 BIT MATL (TACK COAT) POUND RURAL	48203029 HMA SHOULDER 8" SQ YD URBAN	48203029 HMA SHOULDER 8" SQ YD RURAL
144+00.00	TO	163+45.32	1945.32	URBAN/RURAL SPLIT	4.00	7,781.28	URBAN	194.53	0.00	864.59	0.00
163+45.32	TO	181+66.54	1821.22	E FORD HARRIS RD	4.00	7,284.88	RURAL	0.00	182.12	0.00	809.43
182+12.43	TO	247+65.56	6553.13	E LEVERETT RD	4.00	26,212.52	RURAL	0.00	655.31	0.00	2,912.50
248+61.69	TO	253+12.48	450.79	EXISTING SHOULDERS	4.00	1,803.16	RURAL	0.00	45.08	0.00	200.35
259+16.38	TO	282+52.57	2336.19	EXISTING SHOULDERS	4.00	9,344.76	RURAL	0.00	233.62	0.00	1,038.31
289+46.77	TO	325+56.21	3609.44	EXISTING SHOULDERS	4.00	14,437.76	RURAL	0.00	360.94	0.00	1,604.20
						URBAN/RURAL SOUTHBOUND TOTALS =		194.53	1,477.07	864.59	6,564.79
						ROUNDED URBAN/RURAL SOUTHBOUND TOTALS =		195.00	1,478.00	865.00	6,565.00
						ROUNDED SOUTHBOUND TOTALS =		1,673.00		7,430.00	
						ROUNDED URBAN/RURAL TOTALS =		390.00	3,087.00	1,730.00	13,713.00
						ROUNDED TOTALS =		3,477.00		15,443.00	

40600290 QUANTITIES CONTINUE IN SHOULDER RUMBLE STRIP8" SCHEDULE

MODEL: SMODELNAMES
FILE NAME: pw:\\ildot-pw.bentley.com:PWIDOT\Documents\IDOT Offices\District 5\Projects\D570F56\CADData\CADsheets\D570F56-Ins-Schedules of Quantities.dgn

USER NAME = PiersonTJ	DESIGNED -	REVISED -	STATE OF ILLINOIS DEPARTMENT OF TRANSPORTATION
	DRAWN -	REVISED -	
PLOT SCALE = 40.0000 ' / in.	CHECKED -	REVISED -	
PLOT DATE = 1/24/2022	DATE -	REVISED -	

SCHEDULES OF QUANTITIES

SCALE: | SHEET 1 OF 2 SHEETS | STA. TO STA.

F.A.P. RTE.	SECTION	COUNTY	TOTAL SHEETS	SHEET NO.
800	*	CHAMPAIGN	51	8
		CONTRACT NO. 70F56		
		ILLINOIS FED. AID PROJECT		

* (28-X1, 29-X1)HSIP 22-2

SCHEDULE OF QUANTITIES

NB PAVEMENT REMOVAL SCHEDULE

STA.	TO	STA.	LOCATION	REMOVAL AREA SQ FT	4400100 PAVEMENT REMOVAL URBAN SQ YD	4400100 PAVEMENT REMOVAL RURAL SQ YD
155+49.67	TO	155+76.27	F.E. #002	52.52	5.84	0.00
161+06.49	TO	162+83.92	C.E. #001	660.26	73.36	0.00
164+92.94	TO	166+05.25	C.E. #002	423.66	0.00	47.07
168+71.19	TO	169+17.38	C.E. #003	177.46	0.00	19.72
169+33.17	TO	170+64.30	C.E. #004 P.E. #001	493.67	0.00	54.85
170+70.84	TO	171+07.29	P.E. #002	139.04	0.00	15.45
175+16.36	TO	176+53.55	P.E. #003 P.E. #004	535.51	0.00	59.50
177+51.86	TO	177+87.54	P.E. #005	132.00	0.00	14.67
178+11.31	TO	178+82.67	P.E. #006	262.59	0.00	29.18
179+03.79	TO	179+66.90	P.E. #007	233.93	0.00	25.99
181+63.49	TO	181+69.42	E FORD HARR S RD	14.44	0.00	1.60
182+13.12	TO	182+19.60	E FORD HARR S RD	16.46	0.00	1.83
195+23.60	TO	195+48.85	F.E. #003	65.92	0.00	7.32
208+35.54	TO	208+60.40	F.E. #005	63.20	0.00	7.02
221+64.58	TO	221+88.30	F.E. #007	60.14	0.00	6.68
234+87.21	TO	235+13.00	F.E. #008	58.55	0.00	6.51
236+28.09	TO	236+62.99	P.E. #008	131.84	0.00	14.65
241+16.36	TO	241+68.18	P.E. #009	199.92	0.00	22.21
247+31.51	TO	247+49.53	E LEVERETT RD	36.05	0.00	4.01
249+19.64	TO	249+45.47	E LEVERETT RD	66.43	0.00	7.38
261+56.09	TO	261+89.38	F.E. #011	54.60	0.00	6.07
274+63.91	TO	274+94.38	F.E. #012	59.87	0.00	6.65
281+98.38	TO	282+02.44	EXISTING SHOULDERS	4.20	0.00	0.47
287+91.94	TO	287+97.84	CR 2200 N	14.42	0.00	1.60
288+43.36	TO	288+51.46	CR 2200 N	14.32	0.00	1.59
299+81.41	TO	300+11.95	P.E. #010	111.34	0.00	12.37
314+51.95	TO	314+79.68	F.E. #016	56.93	0.00	6.33
321+94.95	TO	322+38.33	F.E. #017	111.27	0.00	12.36
			NORTHBOUND URBAN/RURAL TOTALS=		79.20	393.08
			NORTHBOUND ROUNDED URBAN/RURAL TOTALS=		80.00	394.00
			NORTHBOUND TOTALS=		474.00	

MATERIAL REMOVAL REQUIRED FOR SHOULDER INSTALLATION INCLUDED IN THE COST OF PAVEMENT REMOVAL.

SB PAVEMENT REMOVAL SCHEDULE

STA.	TO	STA.	LOCATION	REMOVAL AREA SQ FT	4400100 PAVEMENT REMOVAL URBAN SQ YD	4400100 PAVEMENT REMOVAL RURAL SQ YD
155+78.82	TO	155+78.82	F.E. #002	79.32	8.81	0.00
181+54.75	TO	181+66.54	E FORD HARR S RD	18.04	0.00	2.00
182+12.43	TO	182+24.55	E FORD HARR S RD	23.52	0.00	2.61
208+21.70	TO	208+52.88	F.E. #004	66.76	0.00	7.42
221+60.76	TO	221+92.41	F.E. #006	66.76	0.00	7.42
236+19.83	TO	236+84.67	MAILBOX TURNOUT	236.24	0.00	26.25
241+27.21	TO	241+53.99	F.E. #009	60.79	0.00	6.75
247+48.00	TO	247+65.56	E LEVERETT RD	37.50	0.00	4.17
248+61.69	TO	248+74.09	E LEVERETT RD	21.23	0.00	2.36
248+87.61	TO	249+07.91	E LEVERETT RD	29.86	0.00	3.32
253+10.36	TO	253+12.48	EXISTING SHOULDERS	8.47	0.00	0.94
259+16.38	TO	259+24.92	EXISTING SHOULDERS	26.03	0.00	2.89
261+48.87	TO	261+86.05	F.E. #010	88.27	0.00	9.81
282+52.57	TO	282+52.77	EXISTING SHOULDERS	0.39	0.00	0.04
289+46.77	TO	289+49.29	EXISTING SHOULDERS	7.22	0.00	0.80
291+29.32	TO	291+66.79	F.E. #014	139.42	0.00	15.49
325+31.16	TO	325+56.21	EXISTING SHOULDERS	43.22	0.00	4.80
			SOUTHBOUND URBAN/RURAL TOTALS=		8.81	97.07
			SOUTHBOUND ROUNDED URBAN/RURAL TOTALS=		9.00	98.00
			SOUTHBOUND TOTALS=		107.00	
			URBAN/RURAL TOTALS=		89.00	492.00
			TOTALS=		581.00	

MATERIAL REMOVAL REQUIRED FOR SHOULDER INSTALLATION INCLUDED IN THE COST OF PAVEMENT REMOVAL.

NB AGGREGATE WEDGE SHOULDER, TYPE B SCHEDULE

STA.	TO	STA.	LENGTH FT	LOCATION	AVERAGE AGGREGATE THICKNESS IN	AGGREGATE WIDTH FT	48102100 AGGREGATE WEDGE SHOULDER, TYPE B TON URBAN	48102100 AGGREGATE WEDGE SHOULDER, TYPE B TON RURAL
155+49.67	TO	155+76.27	26.60	F.E. #002	0.5	2.00	0.07	0.00
195+23.60	TO	195+48.85	25.25	F.E. #003	0.5	2.00	0.00	0.07
208+35.54	TO	208+60.40	24.86	F.E. #005	0.5	2.00	0.00	0.07
221+64.58	TO	221+88.30	23.72	F.E. #007	0.5	2.00	0.00	0.07
234+87.21	TO	235+13.00	25.79	F.E. #008	0.5	2.00	0.00	0.07
261+56.09	TO	261+89.38	33.29	F.E. #011	0.5	2.00	0.00	0.09
274+63.91	TO	274+94.38	30.47	F.E. #012	0.5	2.00	0.00	0.09
314+51.95	TO	314+79.68	27.73	F.E. #016	0.5	2.00	0.00	0.07
321+94.95	TO	322+38.33	43.38	F.E. #017	0.5	2.00	0.00	0.11
				NORTHBOUND URBAN/RURAL TOTALS=			0.07	0.64
				NORTHBOUND TOTALS=			0.71	

SB AGGREGATE WEDGE SHOULDER, TYPE B SCHEDULE

STA.	TO	STA.	LENGTH FT	LOCATION	AVERAGE AGGREGATE THICKNESS IN	AGGREGATE WIDTH FT	48102100 AGGREGATE WEDGE SHOULDER, TYPE B TON URBAN	48102100 AGGREGATE WEDGE SHOULDER, TYPE B TON RURAL
155+48.27	TO	155+78.82	30.55	F.E. #002	0.5	2.00	0.09	0.00
208+21.70	TO	208+52.88	31.18	F.E. #004	0.5	2.00	0.00	0.09
221+60.76	TO	221+92.41	31.65	F.E. #006	0.5	2.00	0.00	0.09
241+27.21	TO	241+53.99	26.78	F.E. #009	0.5	2.00	0.00	0.07
261+48.87	TO	261+86.05	37.18	F.E. #010	0.5	2.00	0.00	0.11
303+73.85	TO	303+97.15	23.30	F.E. #015	1	2.00	0.00	0.13
				SOUTHBOUND URBAN/RURAL TOTALS=			0.09	0.49
				SOUTHBOUND TOTALS=			0.58	
				URBAN/RURAL TOTALS=			0.16	1.13
				ROUNDED URBAN/RURAL TOTALS=			1.00	1.00
				TOTALS=			2.00	

SURVEY MONUMENT COVER ASSEMBLY SCHEDULE

STA	DIRECTION	OFFSET FT	MARKER DESCRIPTION	Z0070100 SURVEY MONUMENT COVER ASSEMBLY RURAL EACH
235+08.72	SB	45.266	821-1/2 SECTION CORNER	1.00
261+67.51	SB	35.365	821-5/8 IDOT QUARTER CORNER - N LEVERETT RD	1.00
			TOTAL =	2.00

NB SHOULDER RUMBLE STRIP 8" SCHEDULE

STA	TO	STA	LENGTH FT	OMISSION REASON	40600290 BIT MATL (TACK COAT) POUND URBAN	40600290 BIT MATL (TACK COAT) POUND RURAL	64200108 SHOULDER RUMBLE STRIP 8" FT URBAN	64200108 SHOULDER RUMBLE STRIP 8" FT RURAL
144+00.00	TO	161+21.39	1,721.39	C.E. #001	86.07	0.00	1,721.39	0.00
162+67.67	TO	163+45.32	77.65	URBAN/RURAL	3.88	0.00	77.65	0.00
163+45.32	TO	165+08.53	163.21	C.E. #002	0.00	8.16	0.00	163.21
166+01.34	TO	168+74.76	273.42	C.E. #003	0.00	13.67	0.00	273.42
169+15.20	TO	169+48.37	33.17	C.E. #004	0.00	1.66	0.00	33.17
170+25.22	TO	170+32.38	7.16	P.E. #001	0.00	0.36	0.00	7.16
170+59.66	TO	170+73.56	13.90	P.E. #002	0.00	0.70	0.00	13.90
171+04.94	TO	175+19.94	415.00	P.E. #003	0.00	20.75	0.00	415.00
175+41.44	TO	176+15.42	73.98	P.E. #004	0.00	3.70	0.00	73.98
176+48.41	TO	177+55.32	106.91	P.E. #005	0.00	5.35	0.00	106.91
177+85.24	TO	178+15.87	30.63	P.E. #006	0.00	1.53	0.00	30.63
178+71.98	TO	179+06.55	34.57	P.E. #007	0.00	1.73	0.00	34.57
179+57.35	TO	181+69.42	212.07	E FORD HARRIS RD	0.00	10.60	0.00	212.07
182+13.12	TO	236+30.64	5,417.52	P.E. #008	0.00	270.88	0.00	5,417.52
236+59.65	TO	241+18.32	458.67	P.E. #009	0.00	22.93	0.00	458.67
241+64.16	TO	247+49.53	585.37	E LEVERETT RD	0.00	29.27	0.00	585.37
249+19.64	TO	287+97.35	3,877.71	CR 2200 N	0.00	193.89	0.00	3,877.71
288+43.36	TO	299+84.99	1,141.63	P.E. #010	0.00	57.08	0.00	1,141.63
300+09.79	TO	329+00.00	2,890.21	END SECTION	0.00	144.51	0.00	2,890.21
				NORTHBOUND URBAN/RURAL TOTALS =	89.95	786.77	1,799.04	15,735.13
				NORTHBOUND ROUNDED URBAN/RURAL TOTALS =	90.00	787.00	1,800.00	15,736.00
				NORTHBOUND TOTALS =	877.00		17,536.00	

40600290 QUANTITIES CONTINUE IN HMA SHOULDER SCHEDULE

SB SHOULDER RUMBLE STRIP 8" SCHEDULE

STA	TO	STA	LENGTH FT	OMISSION REASON	40600290 BIT MATL (TACK COAT) POUND URBAN	40600290 BIT MATL (TACK COAT) POUND RURAL	64200108 SHOULDER RUMBLE STRIP 8" FT URBAN	64200108 SHOULDER RUMBLE STRIP 8" FT RURAL
144+00.00	TO	161+21.39	1,721.39	URBAN/RURAL	86.07	0.00	1,721.39	0.00
161+21.39	TO	182+66.54	2,045.15	E FORD HARRIS RD	0.00	102.26	0.00	2,045.15
182+12.43	TO	247+65.56	6,553.13	E LEVERETT RD	0.00	327.66	0.00	6,553.13
248+61.69	TO	253+12.48	450.79		0.00	22.54	0.00	450.79
253+12.48	TO	259+16.38	603.90		0.00	30.20	0.00	603.90
259+16.38	TO	282+52.57	2,336.19		0.00	116.81	0.00	2,336.19
282+52.57	TO	288+01.54	548.97	CR 2200 N	0.00	27.45	0.00	548.97
288+55.11	TO	289+46.77	91.66		0.00	4.58	0.00	91.66
289+46.77	TO	325+56.21	3,609.44		0.00	180.47	0.00	3,609.44
325+56.21	TO	329+00.00	343.79	END SECTION	0.00	17.19	0.00	343.79
				SOUTHBOUND URBAN/RURAL TOTALS =	86.07	829.16	1,721.39	16,583.02
				SOUTHBOUND ROUNDED URBAN/RURAL TOTALS =	87.00	830.00	1,722.00	16,584.00
				SOUTHBOUND TOTALS =	917.00		18,306.00	
				URBAN/RURAL TOTALS =	177.00	1,617.00	3,522.00	32,320.00
				TOTALS =	1,794.00		35,842.00	

40600290 QUANTITIES CONTINUE IN HMA SHOULDER SCHEDULE

MODEL: $MODEL$NAME5
FILE NAME: pw:\\ildot-pw.bentley.com:PWIDOT\Documents\IDOT Offices\District 5\Projects\D570F56\CADData\CADsheets\D570F56-Ins-Schedules of Quantities.dgn

USER NAME = PiersonTJ	DESIGNED -	REVISED -	
	DRAWN -	REVISED -	
PLOT SCALE = 40.0000 ' / in.	CHECKED -	REVISED -	
PLOT DATE = 1/24/2022	DATE -	REVISED -	

STATE OF ILLINOIS
DEPARTMENT OF TRANSPORTATION

SCHEDULES OF QUANTITIES

SCALE: | SHEET 2 OF 2 SHEETS | STA. | TO STA.

F.A.P. RTE.	SECTION	COUNTY	TOTAL SHEETS	SHEET NO.
800	*	CHAMPAIGN	51	9
		CONTRACT NO. 70F56		
		ILLINOIS	FED. AID PROJECT	

* (28-X1, 29-X1)HSIP 22-2

CONTROL POINTS

CONTROL POINTS

POINT #	NORTHING	EASTING	STATION	OFFSET	DESCRIPTION
25	1,272,240.713	1,026,601.737	141+53.459	0.028	PT
26	1,273,634.070	1,026,585.381	155+46.912	-0.075	POT
27	1,277,610.616	1,026,539.048	195+23.728	-0.024	POT
45	1,294,939.947	1,026,336.937	368+54.237	0.000	PC

SECTION CORNERS

POINT #	NORTHING	EASTING	STATION	OFFSET	DESCRIPTION
21016	1,270,994.706	1,026,559.351	129+21.564	106.465	821-5/8 SECTION CORNER
21013	1,273,653.531	1,026,529.514	155+67.023	-55.711	821-LS2280 QUARTER CORNER
21012	1,274,957.410	1,026,514.338	168+70.991	-55.678	821-5/8 1/16TH CORNER
21011	1,276,280.086	1,026,498.958	181+93.756	-55.630	809-MAG SECTION CORNER - FORD HARRIS RD
21010	1,278,937.488	1,026,473.147	208+51.278	-50.445	821-LS2616 QUARTER CORNER
21009	1,281,594.810	1,026,447.331	235+08.721	-45.266	821-1/2 SECTION CORNER
21008	1,284,253.537	1,026,426.219	261+67.513	-35.365	821-5/8-IDOT QUARTER CORNER - N LEVERETT RD
21007	1,290,910.100	1,026,392.039	200+24.373	-37.750	809-MAG SECTION CORNER - 2200N RD
20283	1,292,228.229	1,026,360.019	341+42.434	-8.548	809-MAG SECTION CORNER

TRAVERSE STATION

POINT #	NORTHING	EASTING	STATION	OFFSET	ELEVATION
417	1,273,320.455	1,026,636.056	152+32.727	46.938	732.949
418	1,275,136.667	1,026,521.276	170+50.154	-46.650	729.162
419	1,276,944.839	1,026,592.697	188+57.370	45.856	728.251
420	1,278,918.175	1,026,523.811	208+31.375	-0.01	735.734
421	1,281,066.942	1,026,451.599	229+80.838	-47.154	730.748
422	1,282,961.224	1,026,419.592	248+75.365	-57.065	728.852
423	1,284,890.252	1,026,503.773	268+03.280	49.610	728.57
424	1,286,943.617	1,026,478.883	288+56.795	48.671	729.481
425	1,289,033.632	1,026,453.864	309+46.960	48.030	730.466
426	1,291,023.416	1,026,430.560	329+36.881	47.936	728.172
427	1,292,264.795	1,026,417.910	341+78.322	49.765	729.203
428	1,293,559.003	1,026,303.680	354+73.775	-49.361	727.991

SEC 28, T 20 N, R 9 E, 3RD PM

PAVEMENT REMOVAL

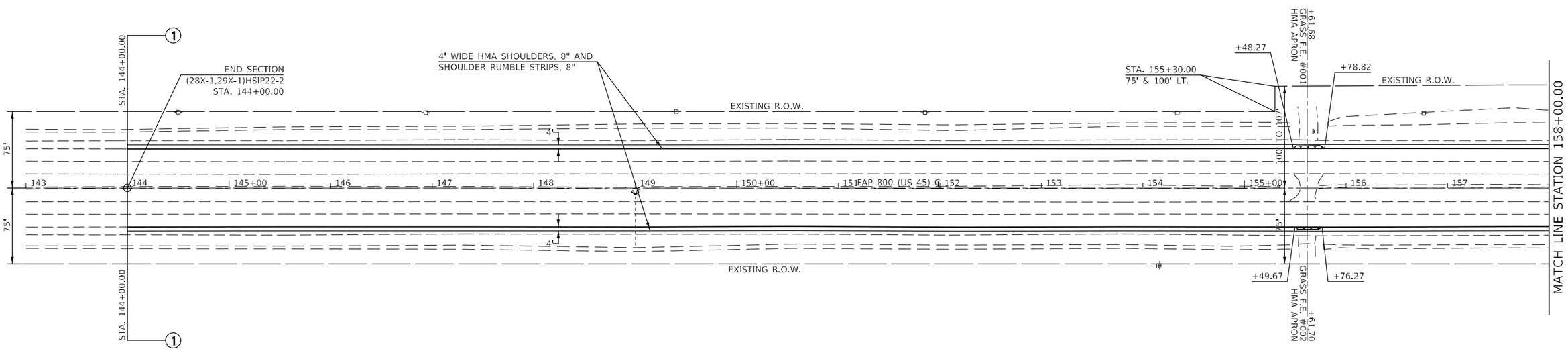

SEC 27, T 20 N, R 9 E, 3RD PM

SEC 28, T 20 N, R 9 E, 3RD PM

PAVEMENT REMOVAL

INCIDENTAL HMA SURFACING & HMA SURFACE REMOVAL, SPECIAL

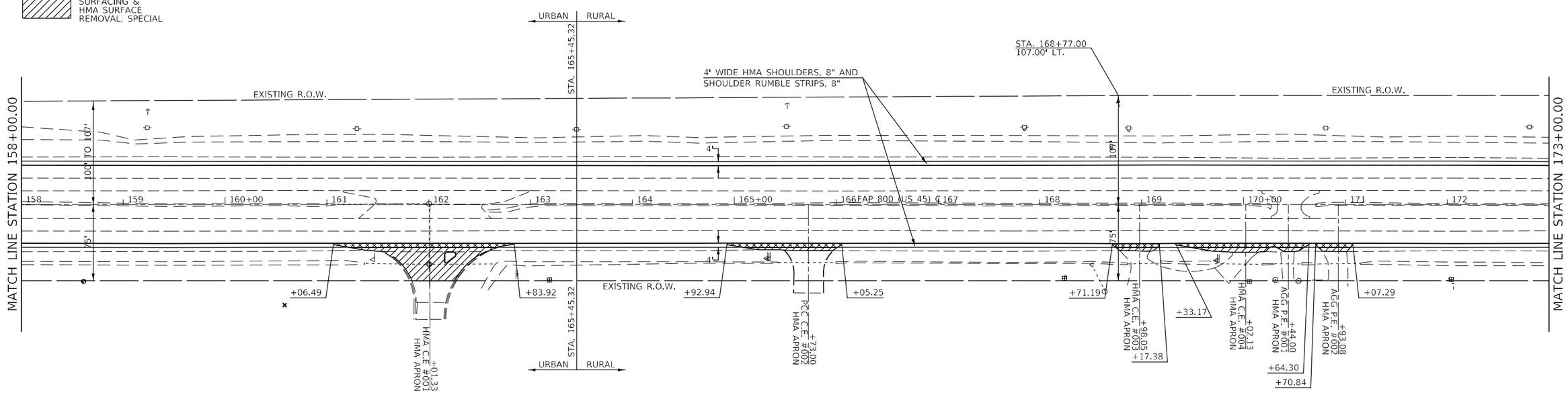

SEC 27, T 20 N, R 9 E, 3RD PM

MODEL: $MODELNAME$
FILE NAME: pw:\\ildot-pw.bentley.com:PWIDOT\Documents\IDOT Offices\District 5\Project\D570F56\CADData\CADsheets\D570F56-sht-50 Scale Plan Sheet.dgn

USER NAME = PiersonTJ	DESIGNED -	REVISED -	STATE OF ILLINOIS DEPARTMENT OF TRANSPORTATION
	DRAWN -	REVISED -	
PLOT SCALE = 100.0000 ' / in.	CHECKED -	REVISED -	
PLOT DATE = 1/24/2022	DATE -	REVISED -	

FAP 800 (US 45) PLAN SHEETS

SCALE: 1" = 50' | SHEET 1 OF 7 SHEETS | STA. 143+00.00 TO STA. 173+00.00

F.A.P. RTE.	SECTION	COUNTY	TOTAL SHEETS	SHEET NO.
800	*	CHAMPAIGN	51	11
		CONTRACT NO. 70F56		
		ILLINOIS	FED. AID PROJECT	

* (28-X1, 29-X1)HSIP 22-2

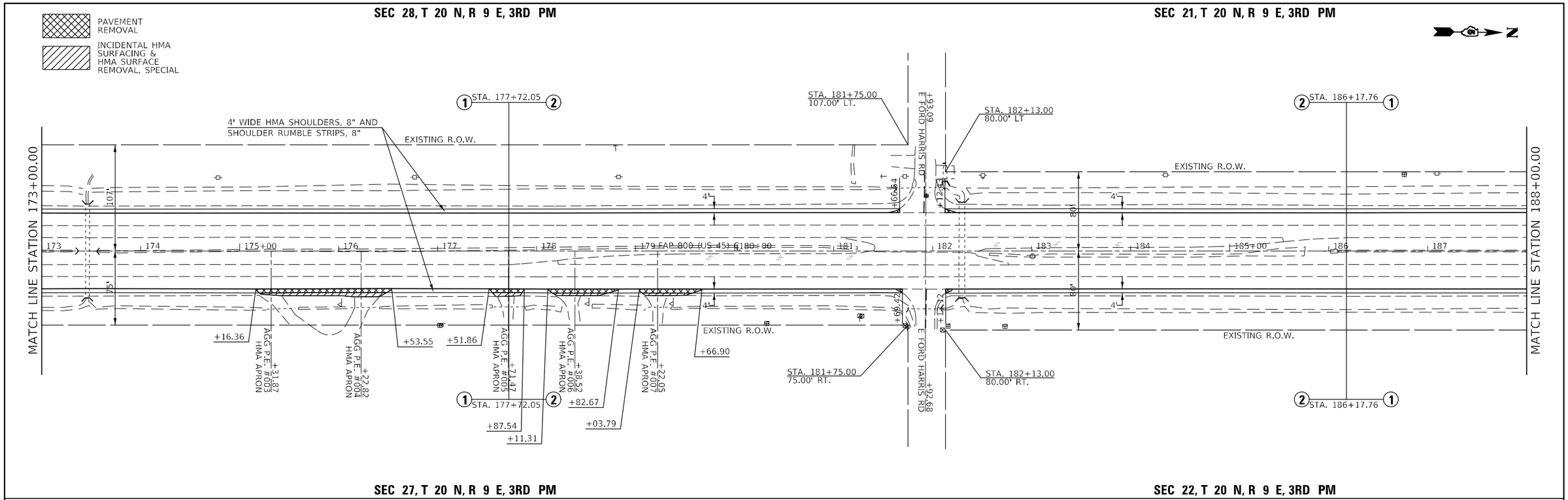

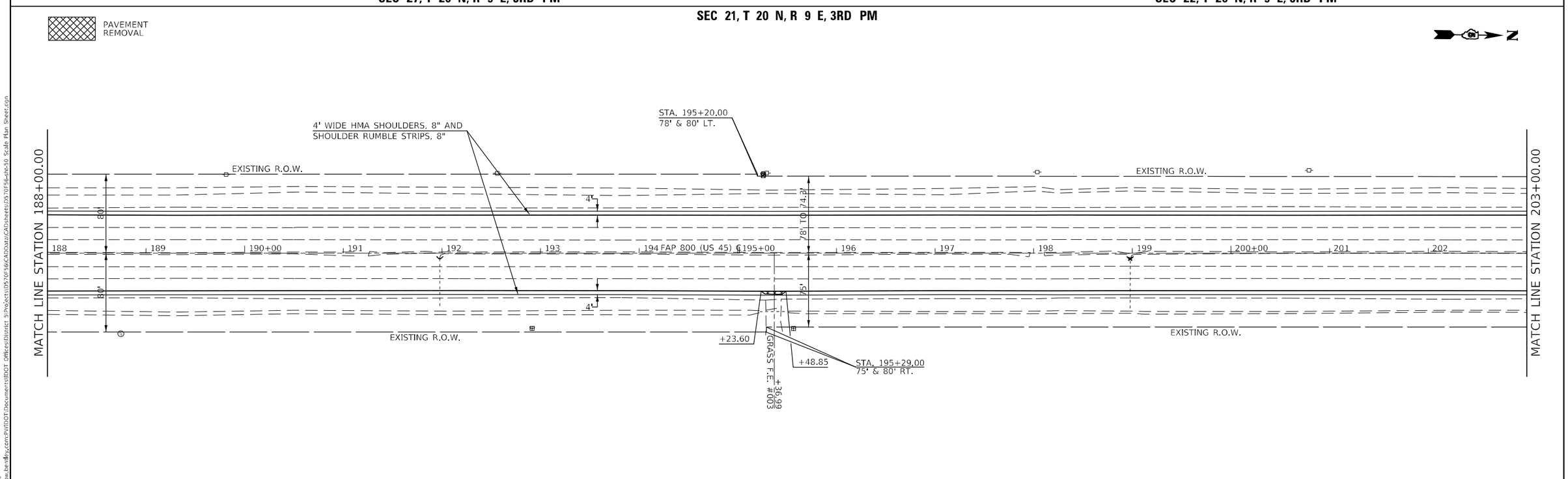

MODEL: $MODELNAME$
FILE NAME: pw:\\ildot-pw.bentley.com:PWIDOT\Documents\IDOT Offices\District 5\Projects\D570F56\CADData\CADsheets\D570F56-sht-50 Scale Plan Sheet.dgn

USER NAME = PiersonTJ	DESIGNED -	REVISED -	
	DRAWN -	REVISED -	
PLOT SCALE = 100.0000 ' / in.	CHECKED -	REVISED -	
PLOT DATE = 1/24/2022	DATE -	REVISED -	

STATE OF ILLINOIS
DEPARTMENT OF TRANSPORTATION

FAP 800 (US 45) PLAN SHEETS

SCALE: 1" = 50' | SHEET 2 OF 7 SHEETS | STA. 173+00.00 TO STA. 203+00.00

F.A.P. RTE.	SECTION	COUNTY	TOTAL SHEETS	SHEET NO.
800	*	CHAMPAIGN	51	12
		CONTRACT NO. 70F56		
		ILLINOIS	FED. AID PROJECT	

* (28-X1, 29-X1)HSIP 22-2

SEC 21, T 20 N, R 9 E, 3RD PM

PAVEMENT REMOVAL

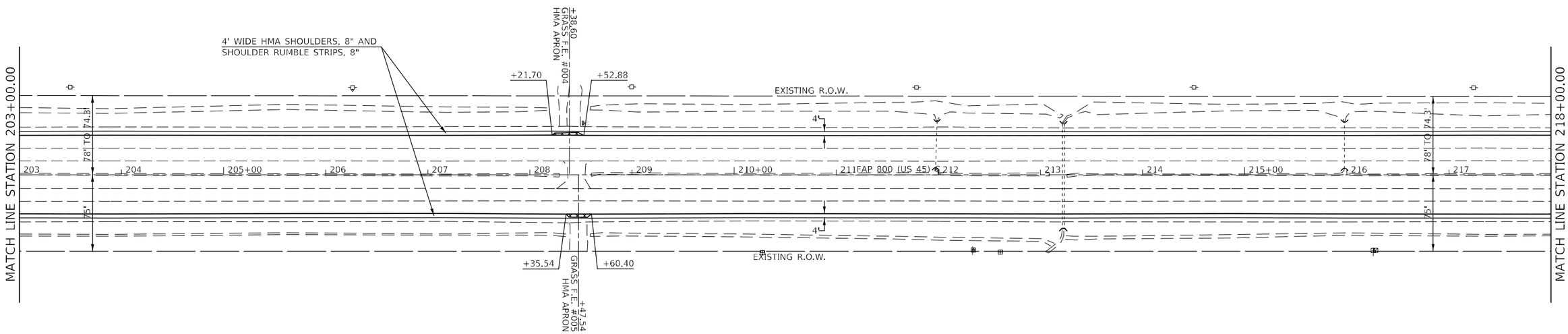

SEC 22, T 20 N, R 9 E, 3RD PM

SEC 21, T 20 N, R 9 E, 3RD PM

PAVEMENT REMOVAL

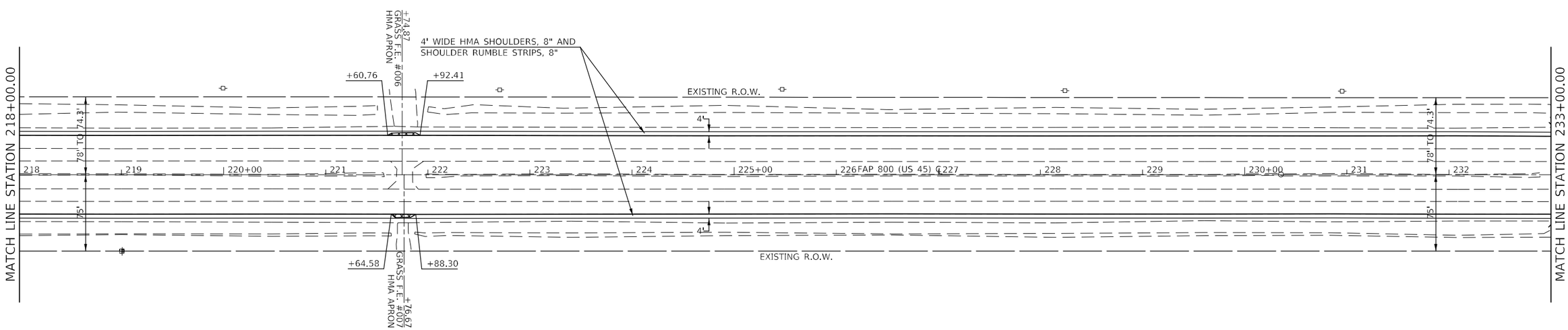

SEC 22, T 20 N, R 9 E, 3RD PM

MODEL: $MODELNAME$
FILE NAME: pw:\\ildot-pw.bentley.com:PWIDOT\Documents\IDOT Offices\District 5\Projects\D570F56\CADData\CADsheets\D570F56-sht-50 Scale Plan Sheet.dgn

USER NAME = PiersonTJ	DESIGNED -	REVISED -	STATE OF ILLINOIS DEPARTMENT OF TRANSPORTATION
	DRAWN -	REVISED -	
PLOT SCALE = 100.0000 ' / in.	CHECKED -	REVISED -	
PLOT DATE = 1/24/2022	DATE -	REVISED -	

FAP 800 (US 45) PLAN SHEETS

SCALE: 1" = 50' | SHEET 3 OF 7 SHEETS | STA. 203+00.00 TO STA. 233+00.00

F.A.P. RTE.	SECTION	COUNTY	TOTAL SHEETS	SHEET NO.
800	*	CHAMPAIGN	51	13
		CONTRACT NO. 70F56		
		ILLINOIS	FED. AID PROJECT	

* (28-X1, 29-X1)HSIP 22-2

PAVEMENT REMOVAL

INCIDENTAL HMA SURFACING & HMA SURFACE REMOVAL, SPECIAL

SEC 21, T 20 N, R 9 E, 3RD PM

SEC 16, T 20 N, R 9 E, 3RD PM

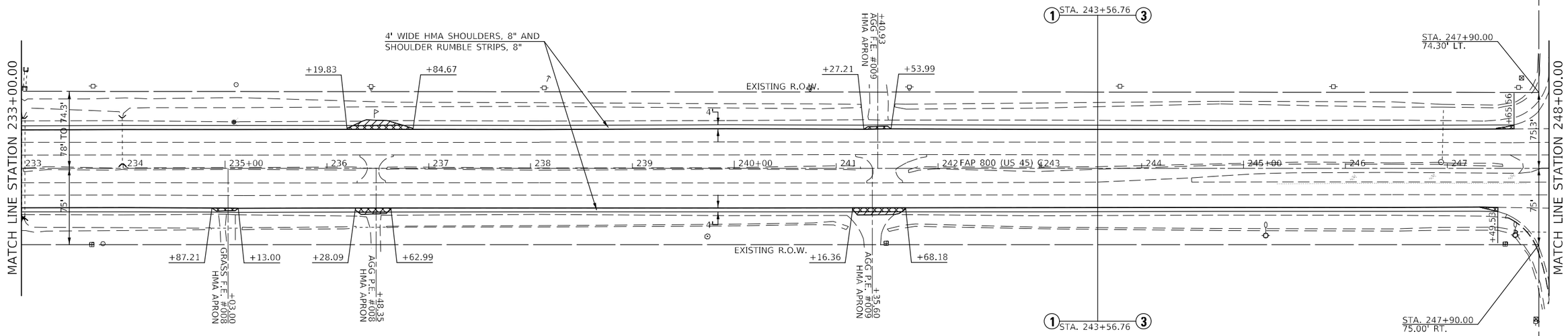

SEC 22, T 20 N, R 9 E, 3RD PM

SEC 15, T 20 N, R 9 E, 3RD PM

PAVEMENT REMOVAL

SEC 16, T 20 N, R 9 E, 3RD PM

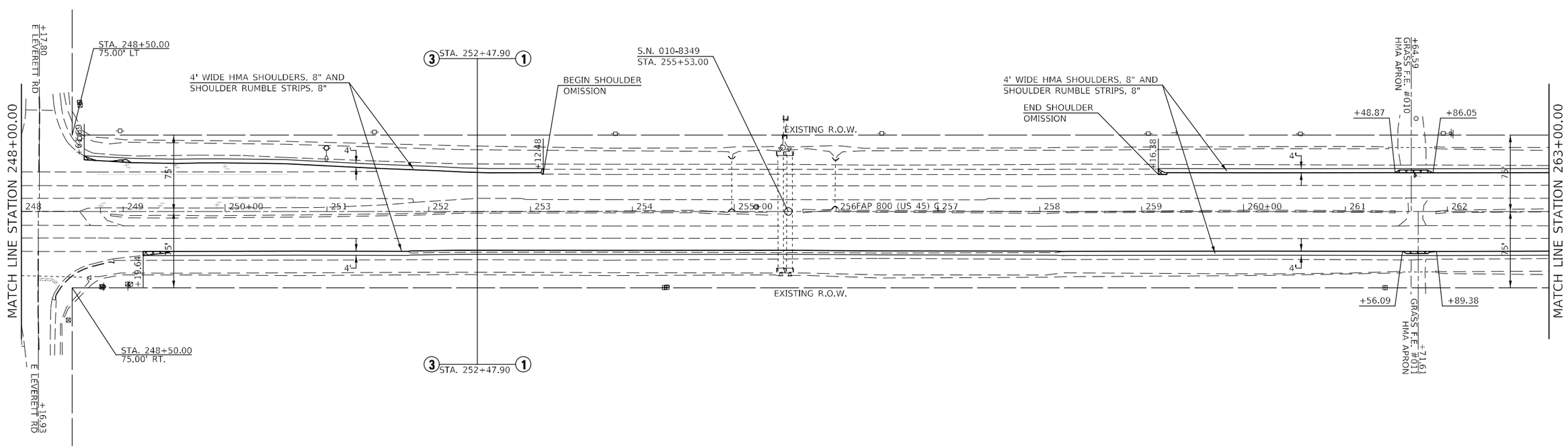

SEC 15, T 20 N, R 9 E, 3RD PM

USER NAME = PiersonTJ	DESIGNED -	REVISED -	STATE OF ILLINOIS DEPARTMENT OF TRANSPORTATION	FAP 800 (US 45) PLAN SHEETS	F.A.P. RTE.	SECTION	COUNTY	TOTAL SHEETS	SHEET NO.
	DRAWN -	REVISED -			800	*	CHAMPAIGN	51	14
PLOT SCALE = 100.0000 ' / in.	CHECKED -	REVISED -					CONTRACT NO. 70F56		
PLOT DATE = 1/24/2022	DATE -	REVISED -		SCALE: 1" = 50' SHEET 4 OF 7 SHEETS STA. 233+00.00 TO STA. 263+00.00			ILLINOIS FED. AID PROJECT		

* (28-X1, 29-X1)HSIP 22-2

MODEL: $MODELNAME$
FILE NAME: pw:\\ildot-pw.bentley.com:PWIDOT\Documents\IDOT Offices\District 5\Project\D570F56\CADData\CADsheets\D570F56-sht-50 Scale Plan Sheet.dgn

SEC 16, T 20 N, R 9 E, 3RD PM

PAVEMENT REMOVAL

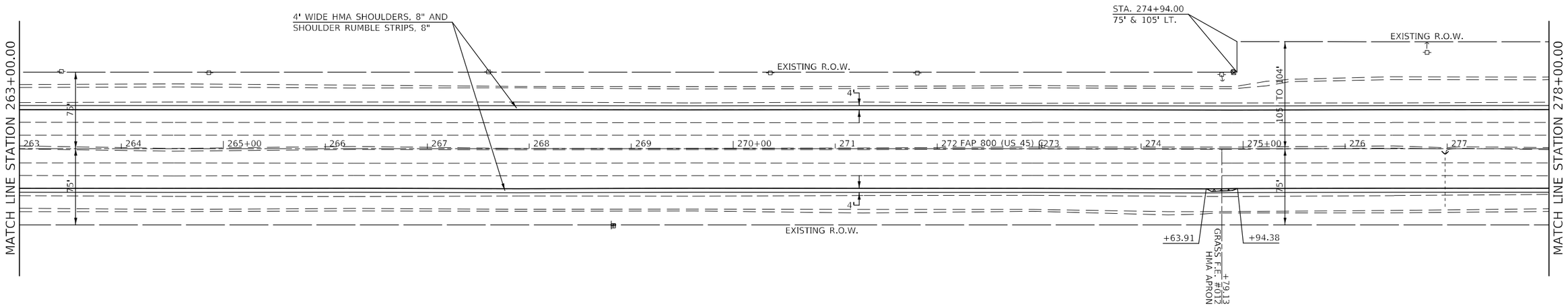

SEC 15, T 20 N, R 9 E, 3RD PM

SEC 16, T 20 N, R 9 E, 3RD PM

SEC 9, T 20 N, R 9 E, 3RD PM

PAVEMENT REMOVAL

INCIDENTAL HMA SURFACING & HMA SURFACE REMOVAL, SPECIAL

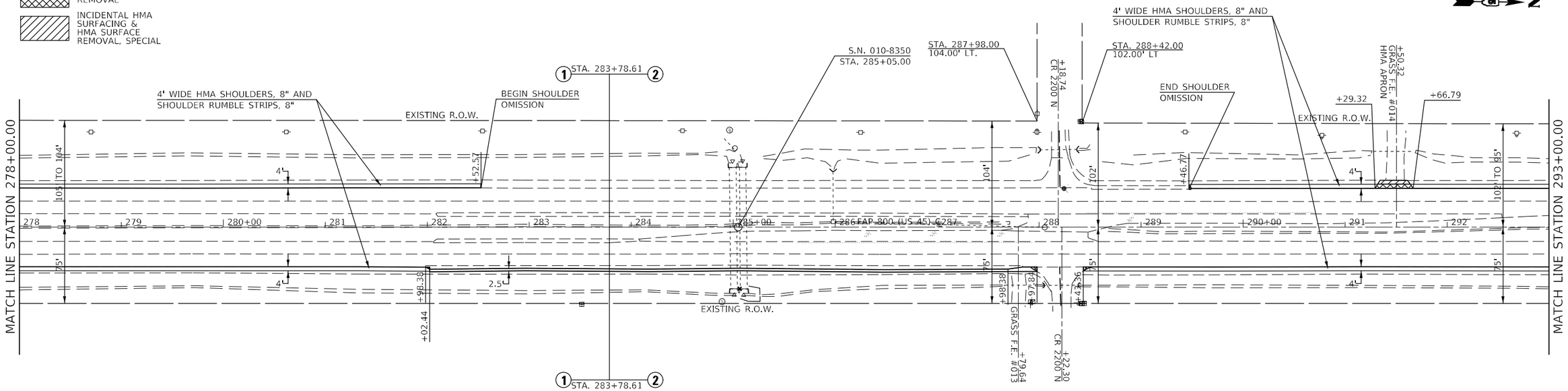

SEC 15, T 20 N, R 9 E, 3RD PM

SEC 10, T 20 N, R 9 E, 3RD PM

USER NAME = PiersonTJ	DESIGNED -	REVISED -	STATE OF ILLINOIS DEPARTMENT OF TRANSPORTATION
	DRAWN -	REVISED -	
PLOT SCALE = 100.0000 ' / in.	CHECKED -	REVISED -	
PLOT DATE = 1/24/2022	DATE -	REVISED -	

FAP 800 (US 45) PLAN SHEETS

SCALE: 1" = 50' | SHEET 5 OF 7 SHEETS | STA. 263+00.00 TO STA. 293+00.00

F.A.P. RTE.	SECTION	COUNTY	TOTAL SHEETS	SHEET NO.
800	*	CHAMPAIGN	51	15
		CONTRACT NO. 70F56		
	ILLINOIS	FED. AID PROJECT		

* (28-X1, 29-X1)HSIP 22-2

MODEL: $MODELNAMES
FILE NAME: pw:\\ildot-pw.bentley.com:PWIDOT\Documents\IDOT Offices\District 5\Projects\D570F56\CADData\CADsheets\D570F56-Pln-50 Scale Plan Sheet.dgn

SEC 9, T 20 N, R 9 E, 3RD PM

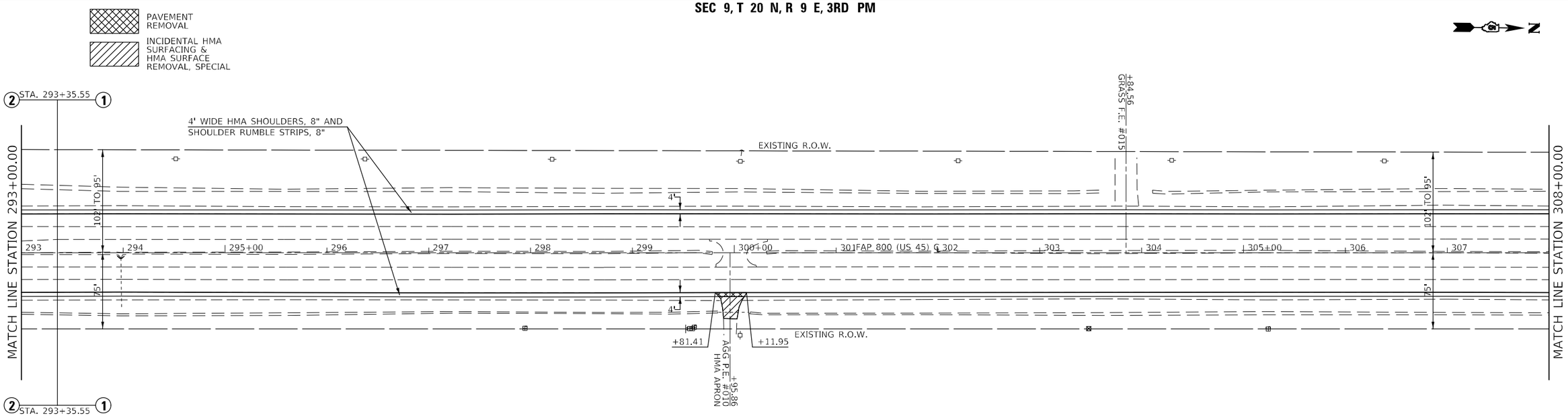

SEC 10, T 20 N, R 9 E, 3RD PM

SEC 9, T 20 N, R 9 E, 3RD PM

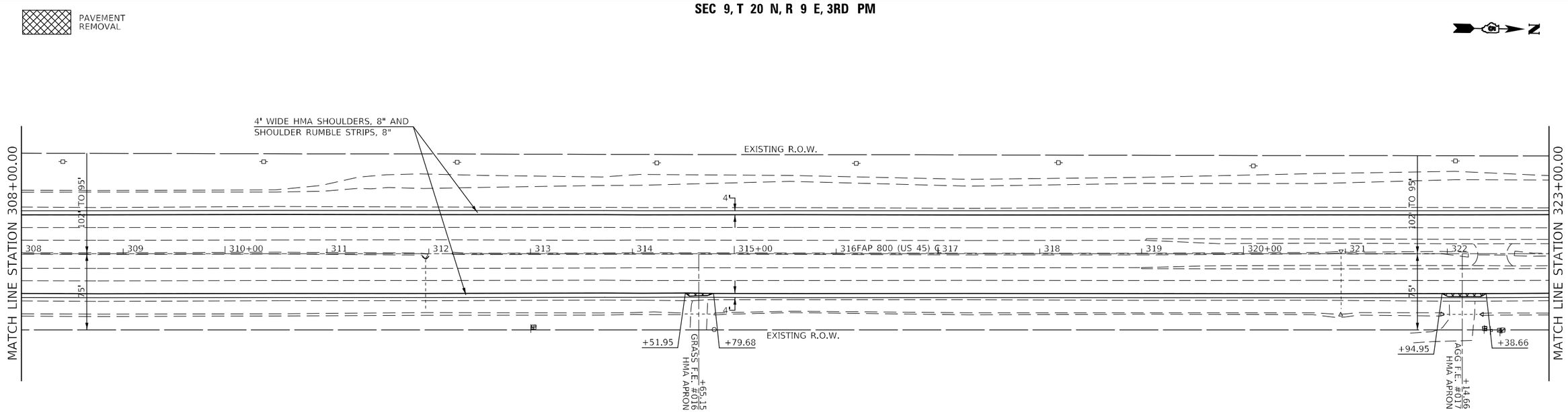

SEC 10, T 20 N, R 9 E, 3RD PM

MODEL: $MODELNAME$
FILE NAME: pw:\\ildot-pw.bentley.com:PWIDOT\Documents\IDOT Offices\District 5\Projects\D570F56\CADData\CADsheets\D570F56-sht-50 Scale Plan Sheet.dgn

USER NAME = PiersonTJ	DESIGNED -	REVISED -	STATE OF ILLINOIS DEPARTMENT OF TRANSPORTATION	FAP 800 (US 45) PLAN SHEETS	F.A.P. RTE.	SECTION	COUNTY	TOTAL SHEETS	SHEET NO.
	DRAWN -	REVISED -			800	*	CHAMPAIGN	51	16
PLOT SCALE = 100.0000 ' / in.	CHECKED -	REVISED -					CONTRACT NO. 70F56		
PLOT DATE = 1/24/2022	DATE -	REVISED -		SCALE: 1" = 50' SHEET 6 OF 7 SHEETS STA. 293+00.00 TO STA. 323+00.00			ILLINOIS FED. AID PROJECT		

* (28-X1, 29-X1)HSIP 22-2

SEC 9, T 20 N, R 9 E, 3RD PM

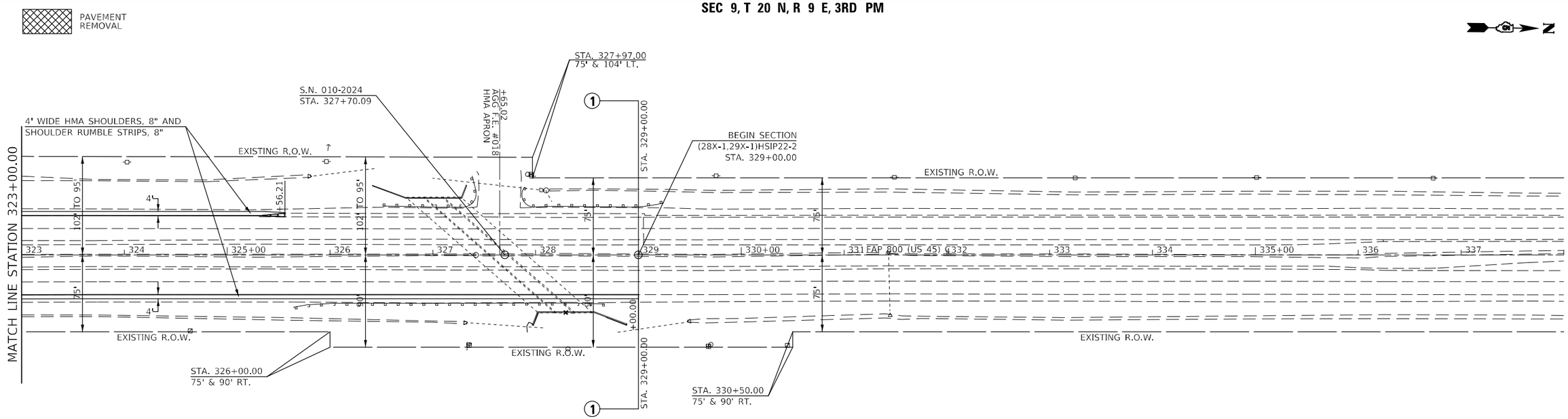

SEC 10, T 20 N, R 9 E, 3RD PM

MODEL: $MODELNAME$
FILE NAME: pw:\\ildot-pw.bentley.com:PWIDOT\Documents\IDOT Offices\District 5\Project\D570F56\CADData\CADsheets\D570F56-sht-50 Scale Plan Sheet.dgn

USER NAME = PiersonTJ	DESIGNED -	REVISED -	STATE OF ILLINOIS DEPARTMENT OF TRANSPORTATION
	DRAWN -	REVISED -	
PLOT SCALE = 100.0000 ' / in.	CHECKED -	REVISED -	
PLOT DATE = 1/24/2022	DATE -	REVISED -	

FAP 800 (US 45) PLAN SHEETS

SCALE: 1" = 50' | SHEET 7 OF 7 SHEETS | STA. 323+00.00 TO STA. 338+00.00

F.A.P. RTE.	SECTION	COUNTY	TOTAL SHEETS	SHEET NO.
800	*	CHAMPAIGN	51	17
		CONTRACT NO. 70F56		
		ILLINOIS	FED. AID PROJECT	

* (28-X1, 29-X1)HSIP 22-2

ENTRANCE WITH HMA APRON

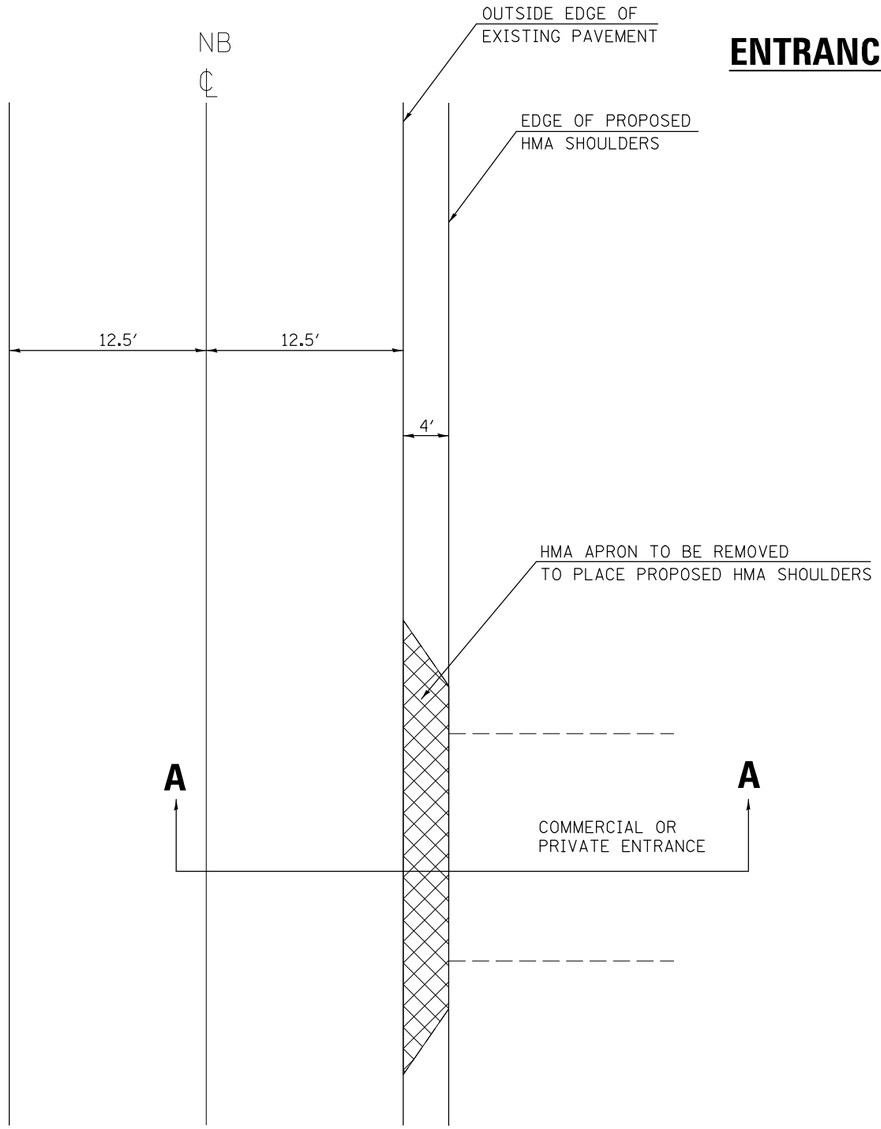

PLAN

NOT TO SCALE

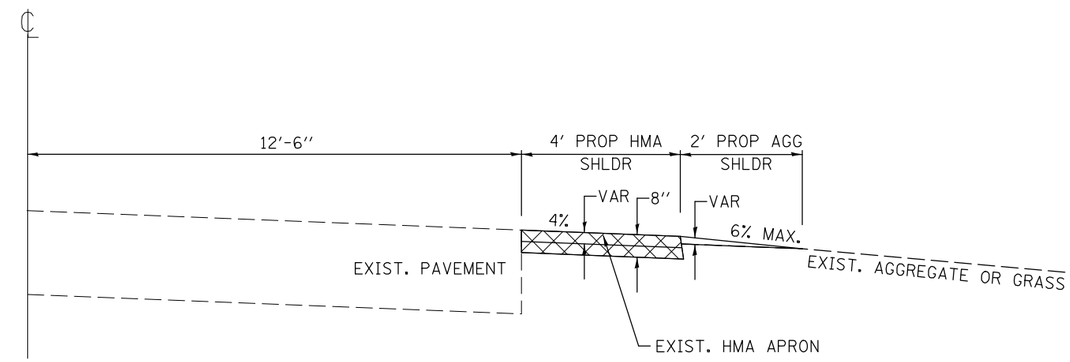

SECTION A–A

NOT TO SCALE

*PAVEMENT REMOVAL

*MATERIAL REMOVAL UNDER HMA REQUIRED TO MEET DEPTH NEEDED FOR SHOULDER INSTALLATION INCLUDED IN COST OF PAVEMENT REMOVAL

MODEL: $MODELNAME$
FILE NAME: pw:\\ildot-pw.bentley.com:PWIDOT\Documents\IDOT Offices\District 5\Project\D570F56\CADData\CADsheets\D570F56-sht-Detail-Typical Entrance.dgn

USER NAME = PiersonTJ	DESIGNED -	REVISED -	
	DRAWN -	REVISED -	
PLOT SCALE = 40.0000 ' / in.	CHECKED -	REVISED -	
PLOT DATE = 1/24/2022	DATE -	REVISED -	

STATE OF ILLINOIS
DEPARTMENT OF TRANSPORTATION

TYPICAL ENTRANCE DETAIL
AGGREGATE OR EARTH ENTRANCE

SCALE: N.T.S. | SHEET 1 OF 2 SHEETS | STA. | TO STA.

F.A.P. RTE.	SECTION	COUNTY	TOTAL SHEETS	SHEET NO.
800	*	CHAMPAIGN	51	18
		CONTRACT NO. 70F56		
		ILLINOIS	FED. AID PROJECT	

* (28-X1, 29-X1)HSIP 22-2

HMA ENTRANCE

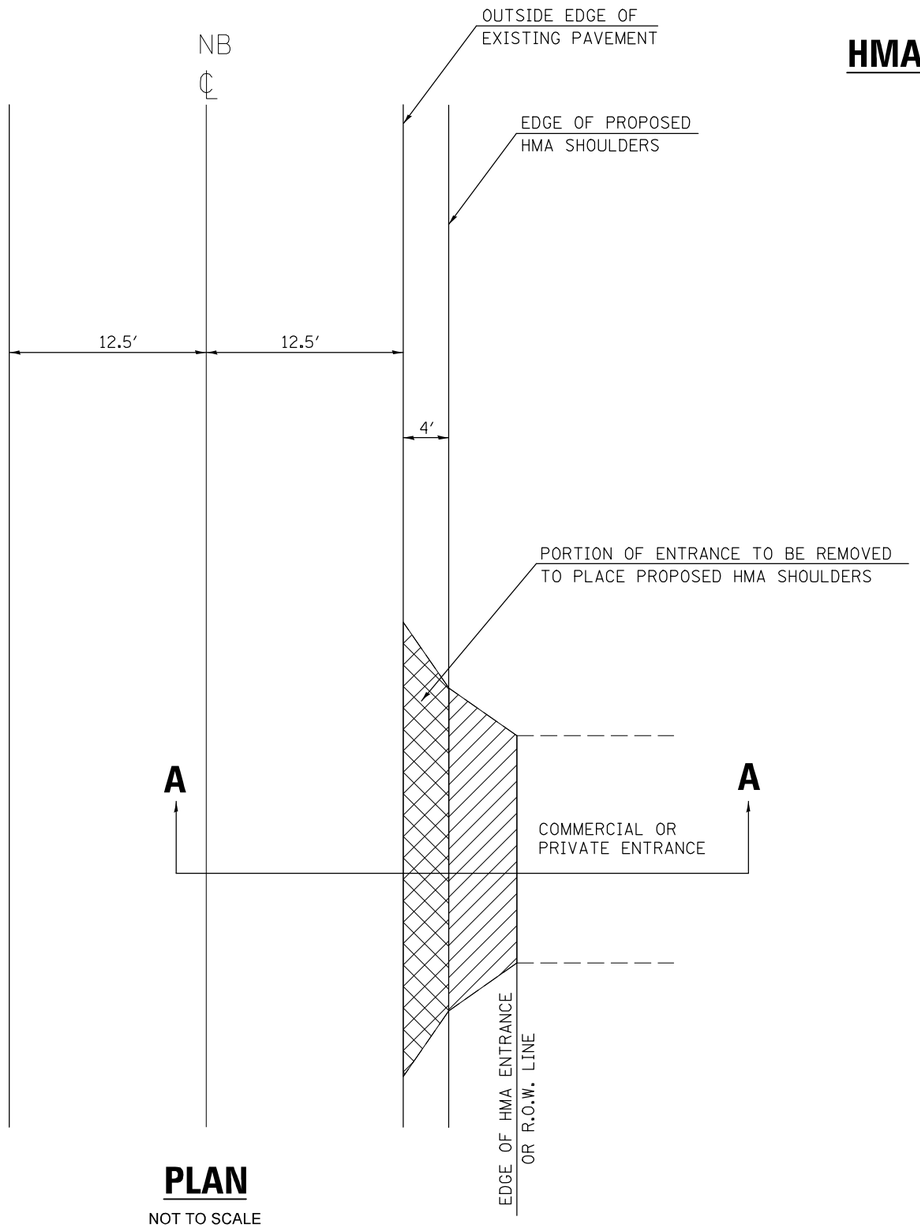

PLAN

NOT TO SCALE

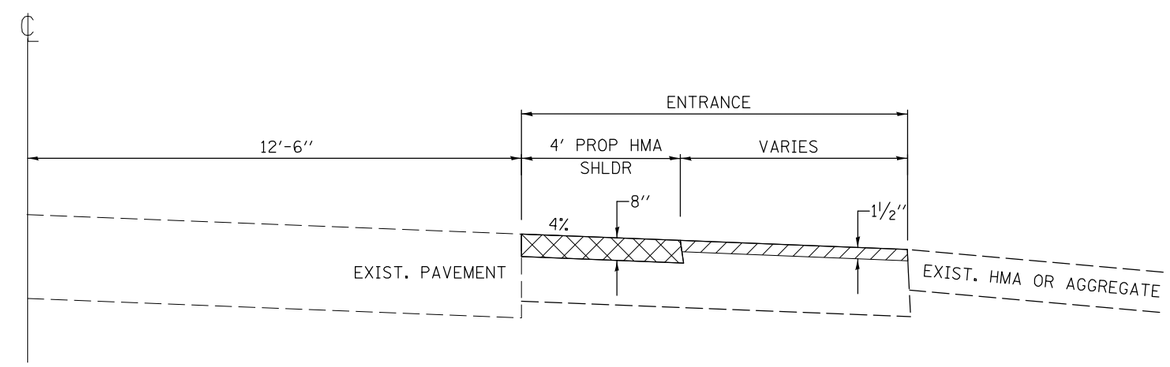

SECTION A–A

NOT TO SCALE

*PAVEMENT REMOVAL

HMA SURFACE REMOVAL, SPECIAL & INCIDENTAL HMA SURFACE

*MATERIAL REMOVAL UNDER HMA REQUIRED TO MEET DEPTH NEEDED FOR SHOULDER INSTALLATION INCLUDED IN COST OF PAVEMENT REMOVAL

USER NAME = PiersonTJ	DESIGNED -	REVISED -	
	DRAWN -	REVISED -	
PLOT SCALE = 40.0000 ' / in.	CHECKED -	REVISED -	
PLOT DATE = 1/24/2022	DATE -	REVISED -	

STATE OF ILLINOIS
DEPARTMENT OF TRANSPORTATION

TYPICAL ENTRANCE DETAIL
PAVED ENTRANCE

SCALE: N.T.S. | SHEET 2 OF 2 SHEETS | STA. | TO STA.

F.A.P. RTE.	SECTION	COUNTY	TOTAL SHEETS	SHEET NO.
800	*	CHAMPAIGN	51	19
		CONTRACT NO. 70F56		
	ILLINOIS	FED. AID PROJECT		

* (28-X1, 29-X1)HSIP 22-2

MODEL: $MODELNAMES
FILE NAME: pw:\\ildot-pw.bentley.com:PWIDOT\Documents\IDOT Offices\District 5\Projects\D570F56\CADData\CADsheets\D570F56-Rlc-Detail-Typical Entrance.dgn

PROJECTS WITHOUT RECONSTRUCTION

("3R" WITHOUT RECONSTRUCTION, 3P, SMART AND CM)

S.M.A.R.T. IMPROVEMENTS

(POLICY RESURFACING; BDE 53–4.03; 1½")

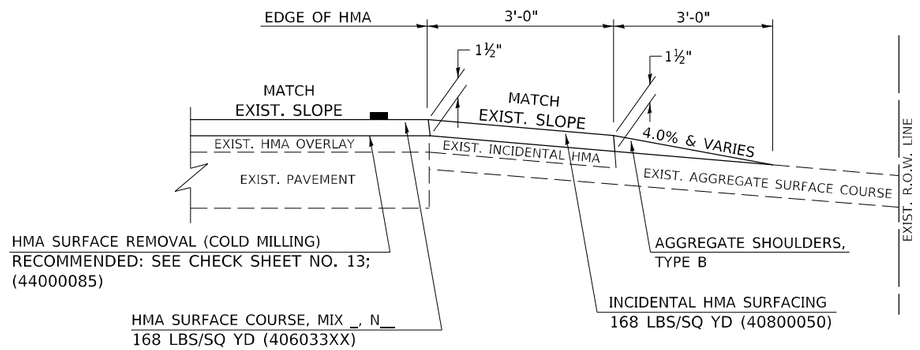

"3P" OR "3R" IMPROVEMENTS

(POLICY RESURFACING; BDE 53–4.02; 2¼" OR 2½" ON BARE CONCRETE)

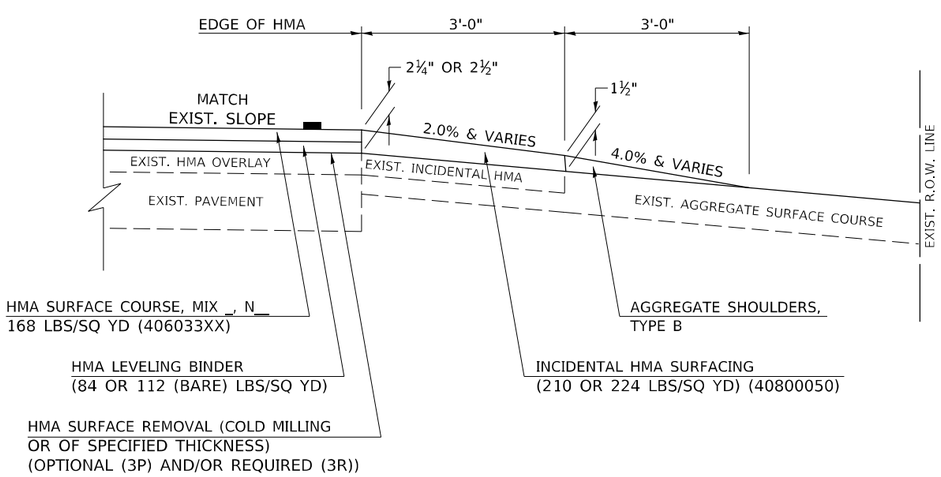

PROJECTS WITH RECONSTRUCTION

("3R" IMPROVEMENTS AND SMART/3P "SPOT" LOCATIONS)

ADJACENT TO PROPOSED HMA SHOULDERS

(AGGREGATE OR EARTH ENTRANCE)

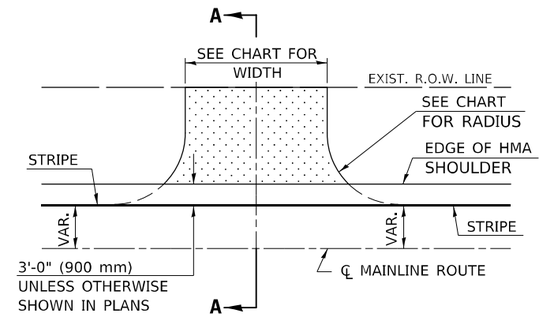

TYPICAL APPLICATION

EXISTING AGGREGATE OR EARTH ENTRANCE

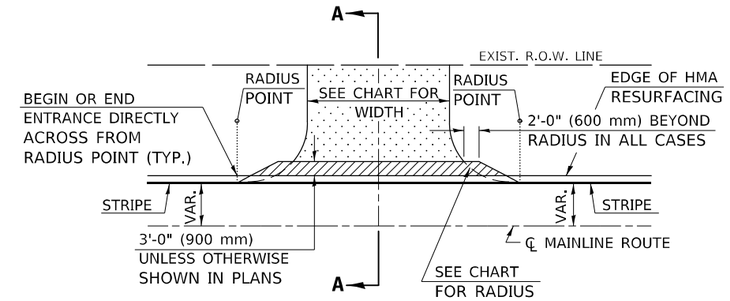

TYPICAL APPLICATION

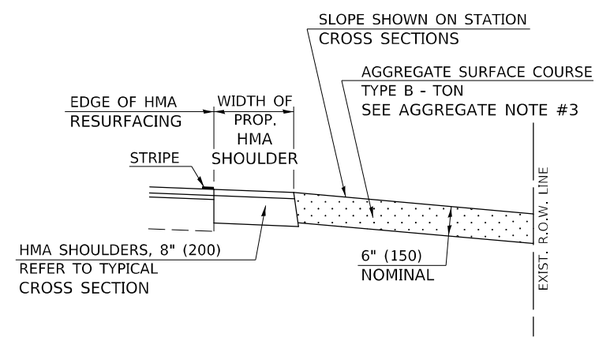

SECTION A–A

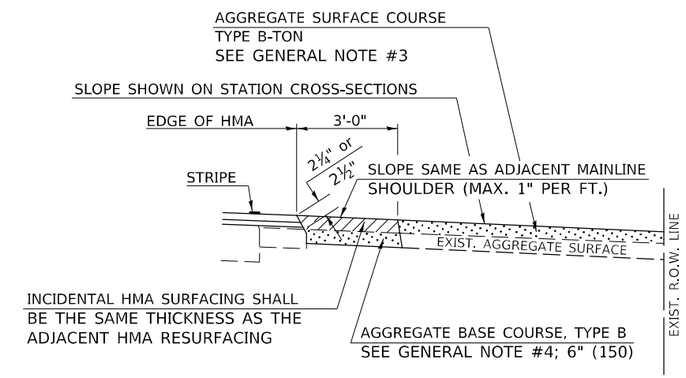

SECTION A–A

Note: All dimensions are in INCHES
(millimeters) unless otherwise shown.

DESIGNER NOTE: SEE PLAN PREPARATION MEMORANDUM 40-09

MODEL: $MODEL$NAMES
FILE NAME: pw:\\ildot-pw.bentley.com:PWIDOT\Documents\IDOT Offices\District 5\Projects\D570F56\CADData\CADsheets\D570F56-dtl-Detail-District 5 Detail.dgn

DISTRICT 5 DETAIL NO. 40800050A

USER NAME = PiersonTJ	DESIGNED -	REVISED - 12/06 TJB
	DRAWN -	REVISED - 09/07 KAG
PLOT SCALE = 40.0000 ' / in.	CHECKED -	REVISED - 04/08 KJT
PLOT DATE = 1/24/2022	DATE -	REVISED - 3/16/17 SWN

STATE OF ILLINOIS
DEPARTMENT OF TRANSPORTATION

FIELD ENTRANCES (NONCOMMERCIAL RURAL)

SCALE: N.T.S. | SHEET 1 OF 2 SHEETS | STA. TO STA.

F.A.P. RTE.	SECTION	COUNTY	TOTAL SHEETS	SHEET NO.
800	*	CHAMPAIGN	51	20
		CONTRACT NO. 70F56		
		ILLINOIS	FED. AID PROJECT	

* (28-X1, 29-X1)HSIP 22-2

DESIGNER NOTE: SEE PLAN PREPARATION MEMORANDUM 40-09

RURAL ENTRANCE DESIGN STANDARDS (PPM 40-09)														
	NEW CONSTRUCTION & 3R with CONSTRUCTION								3R w/out RECONSTRUCTION, 3P, SMART & CM					
	NONCOMMERCIAL					COMMERCIAL			NONCOMMERCIAL			COMMERCIAL		
	PRIVATE & FIELD			FIELD W/FARM IMPLEMENTS					PRIVATE & FIELD					
DESIGN ELEMENT	min.	des.	max.	min.	max.	min.	des.	max.	min.	des.	max.	min.	des.	max.
SURFACE WIDTH (FT)	12	16	24	24	30	1 LANE, 1 WAY						1 LANE, 1 WAY		
						14	16	24						
						2 LANE, 2 WAY						2 LANE, 2 WAY		
						24	30	35						
RADIUS (FT)	15	25	40	30		20	30	50	resurface existing configuration; existing aggregate or earth entrances shall have the continuation of aggregate shoulders placed behind them					
SHOULDER WIDTH (FT)	2	2		2		1	3							
SHOULDER SLOPE (%)	2	4	6	4		2	4	6						
ENTRANCE GRADE (%)	0	2 to 5	10 or 12	2 to 5	10 or 12	0	2 to 5	8 or 10						
SIDE SLOPE (FT)	1:4	1:6	1:10	1:4	1:6	1:4	1:6	1:10						
SURFACE TYPE														
INCIDENTAL HMA SURFACING (INCH)		2		2		3 or 4			taper from hma resurfacing thickness (2 1/2", 2 1/4" or 1 1/2") to 1 1/2" to minimize aggregate shoulder					
AGGREGATE SURFACE COURSE, TYPE B (INCH)		6		6		8			if applicable, use items: Preparation of Base & Aggregate Base Repair; see PPM 30-02					
PCC DRIVEWAY PAVEMENT (INCH)		6						6 or 8						

GENERAL NOTES

1. THE EXISTING SURFACE SHALL BE PREPARED IN ACCORDANCE WITH SECTION 408 OF THE STANDARD SPECIFICATIONS.
2. ANY NECESSARY WORK BEHIND THE HMA SHOULDER OR THE INCIDENTAL HMA SURFACING SHALL BE AS SHOWN IN THE PLANS AND/OR AS DIRECTED BY THE ENGINEER.
3. EARTH EXCAVATION REQUIRED FOR THE CONSTRUCTION OF THE AGGREGATE SURFACE COURSE SHALL BE INCLUDED IN THE COST OF AGGREGATE SURFACE COURSE.
4. AGGREGATE BASE COURSE, TYPE B, 6" (150 mm) MIN. SHALL BE USED WHERE IN THE OPINION OF THE ENGINEER THERE IS NOT SUFFICIENT BASE MATERIAL FOR THE PROPOSED ENTRANCES. THIS MATERIAL SHALL GENERALLY BE USED TO WIDEN ANY EXISTING RETURN OR TO CONSTRUCT NEW ENTRANCES WHERE NONE NOW EXISTS.
5. THE AGGREGATE BASE COURSE SHALL BE CONSTRUCTED 12" (300 mm) WIDER THAN THE SURFACE DIMENSIONS AS SHOWN ABOVE.
6. EXISTING FIELD ENTRANCES OF AGGREGATE OR EARTH WITH NO HMA APRON SHALL NOT RECEIVE A NEW HMA APRON WITHOUT PROPER APPROVAL THROUGH THE BUREAU OF OPERATIONS "POLICY ON PERMITS FOR ACCESS DRIVEWAYS TO STATE HIGHWAYS".
7. TO ASSURE APPROPRIATE ACCESS POLICIES ARE FOLLOWED ALL NEW ACCESS SHALL BE APPLIED FOR THROUGH THE BUREAU OF OPERATIONS PERMIT APPLICATION PROCESS. PLAN PREPARATION MEMORANDUMS 40-09 ALONG WITH DISTRICT PROJECT IMPLEMENTATION MEMORANDUM 104/01 DISCUSS THIS PROCEDURE.

Note: All dimensions are in INCHES (millimeters) unless otherwise shown.

DISTRICT 5 DETAIL NO. 40800050A

MODEL: $MODELNAME$
FILE NAME: pw:\\ildot-pw.bentley.com:PWIDOT\Documents\IDOT Offices\District 5\Project\D570F56\CADData\CADsheets\D570F56-sht-Detail-District 5 Details.dgn

USER NAME = PiersonTJ	DESIGNED -	REVISED - 12/06 TJB	
	DRAWN -	REVISED - 09/07 KAG	
PLOT SCALE = 40.0000 ' / in.	CHECKED -	REVISED - 04/08 KJT	
PLOT DATE = 1/24/2022	DATE -	REVISED - 3/16/17 SWN	

STATE OF ILLINOIS
DEPARTMENT OF TRANSPORTATION

FIELD ENTRANCES (NONCOMMERCIAL RURAL)

SCALE: N.T.S. | SHEET 2 OF 2 SHEETS | STA. TO STA.

F.A.P. RTE.	SECTION	COUNTY	TOTAL SHEETS	SHEET NO.
800	*	CHAMPAIGN	51	21
		CONTRACT NO. 70F56		
		ILLINOIS	FED. AID PROJECT	

* (28-X1, 29-X1)HSIP 22-2

PROJECTS WITHOUT RECONSTRUCTION

S.M.A.R.T. IMPROVEMENTS
(POLICY RESURFACING; BDE 53–4.03; 1½")

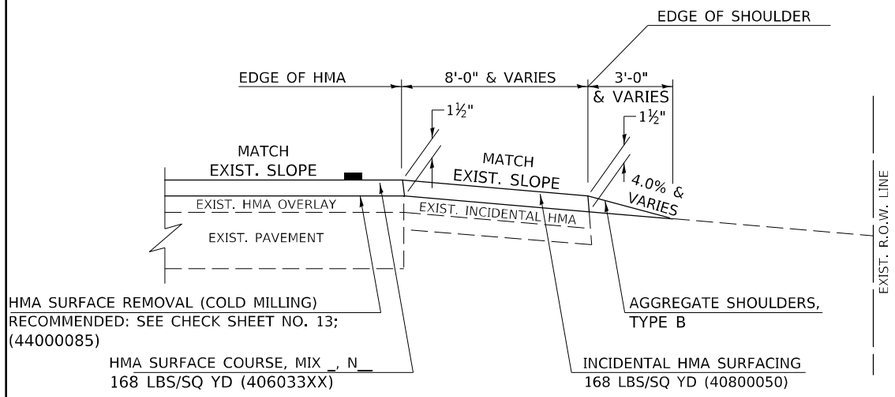

"3P" OR "3R" IMPROVEMENTS
(POLICY RESURFACING; BDE 53–4.02; 2¼" OR 2½" ON BARE CONCRETE)

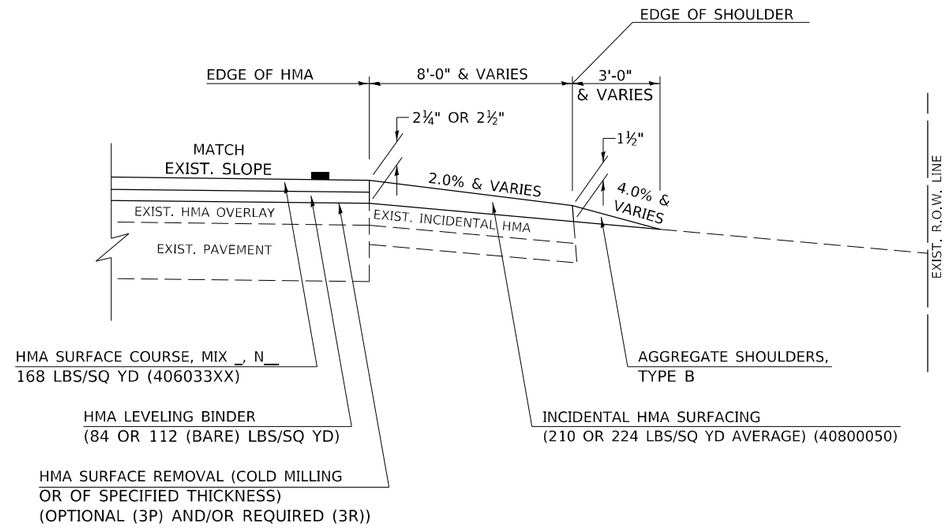

GENERAL NOTES

1. THE EXISTING SURFACE SHALL BE PREPARED IN ACCORDANCE WITH SECTION 408 OF THE STANDARD SPECIFICATIONS.
2. AGGREGATE BASE COURSE, TYPE B, 6" (150) MIN. SHALL BE USED WHERE IN THE OPINION OF THE ENGINEER THERE IS NOT SUFFICIENT BASE MATERIAL FOR THE PROPOSED MAILBOX TURNOUTS. THIS MATERIAL SHALL GENERALLY BE USED TO WIDEN ALL EXISTING MAILBOX TURNOUTS OR TO CONSTRUCT NEW MAILBOX TURNOUTS WHERE NONE NOW EXISTS.
3. ANY NECESSARY WORK BEHIND THE INCIDENTAL HMA SURFACING SHALL BE AS SHOWN IN THE PLANS AND/OR AS DIRECTED BY THE ENGINEER.
4. THE TEMPORARY RELOCATION OF EXISTING MAILBOXES SHALL BE IN ACCORDANCE WITH ARTICLE 107.20 OF THE STANDARD SPECIFICATIONS.
5. WHEN MORE THAN ONE RELOCATED MAILBOX IS INCLUDED IN A PARTICULAR LOCATION THE TWO 10' (3 m) DIMENSIONS AS SHOWN ABOVE SHALL BE FROM THE END MAILBOX.
6. CROSS SLOPE SHALL BE AS SHOWN ON THE STATION CROSS SECTIONS AND/OR AS DIRECTED BY THE ENGINEER.
   MINIMUM 4% (1/2"/') DESIRABLE; MAXIMUM 8% (1"/')
7. WHEN MAILBOX TURNOUTS ARE CONSTRUCTED ADJACENT TO FIELD ENTRANCES, THE WIDTH OF THE INCIDENTAL HMA SURFACING CONSTRUCTED FOR THE FIELD ENTRANCE SHALL MATCH THE WIDTH OF THE PROPOSED MAILBOX TURNOUT SURFACING.
8. THE TOTAL SHOULDER WIDTH, 2.4 m (8') MINIMUM, SHALL BE PAVED BETWEEN SIDEROADS ENTRANCES AND/OR MAILBOX TURNOUTS AT LOCATIONS WHERE THE DISTANCE BETWEEN RADIUS OR TAPER CONTROL POINTS IS LESS THAN 15.0 m (50').
9. MAILBOXES SHALL BE MOUNTED SUCH THAT THE FACE OF THE MAILBOX IS 6" (150 mm) TO 12" (300 mm) AND THE POST A MINIMUM OF 24" (600 mm) FROM THE EDGE OF THE TURNOUT SURFACING.

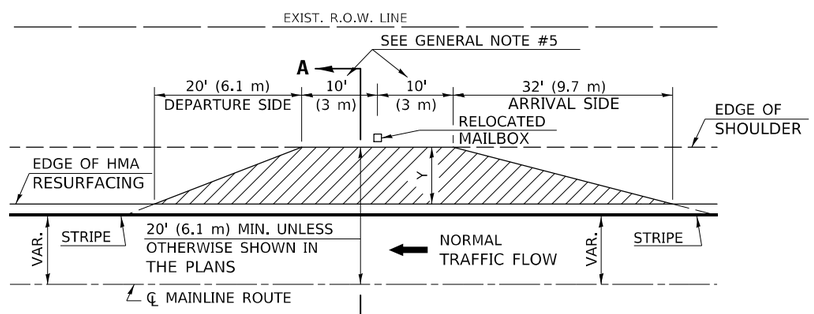

TYPICAL APPLICATION

PROJECTS WITH RECONSTRUCTION
("3R" IMPROVEMENTS)

WIDTH OF SHOULDER	4'-0" - 8'-0" (1.2 m - 2.4 m)	10'-0" (3.0 m)
WIDTH OF TURNOUT "Y"	8'-0" (2.4 m)	8'-0" - 10'-0" (2.4 m - 3.0 m)

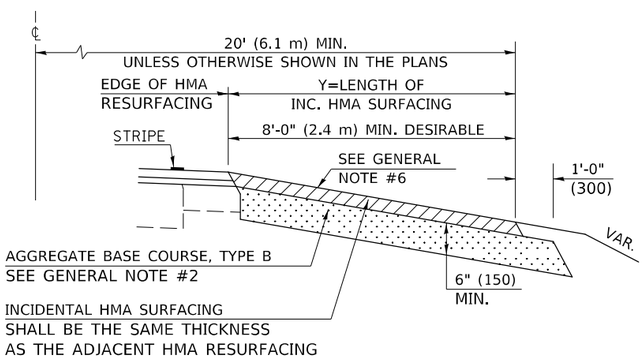

SECTION A–A

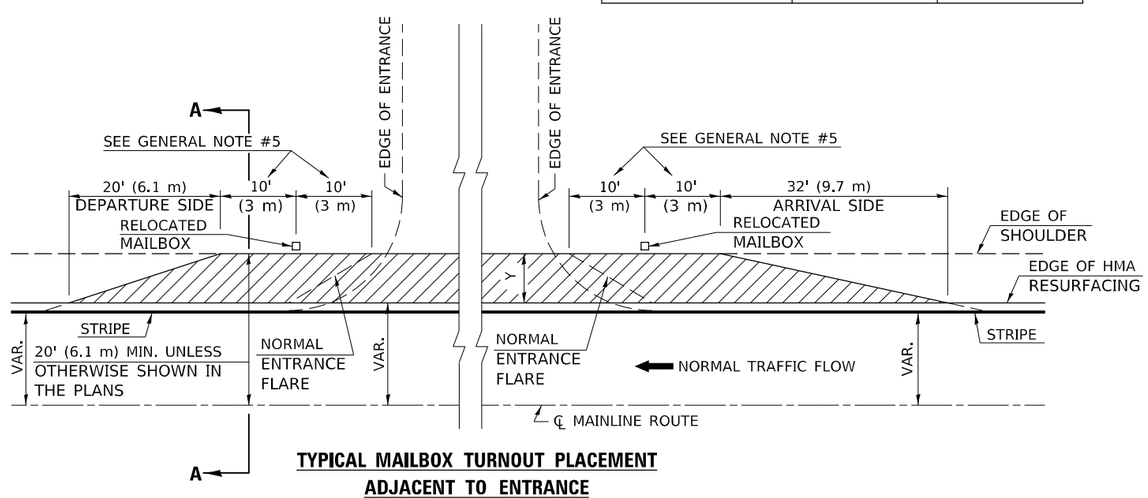

TYPICAL MAILBOX TURNOUT PLACEMENT ADJACENT TO ENTRANCE

Note: All dimensions are in INCHES (millimeters) unless otherwise shown.

DISTRICT 5 DETAIL NO. 40800050B

DESIGNER NOTE: SEE HIGHWAY STANDARD 406201

MODEL: $MODEL NAMES
FILE NAME: pw:\\ildot-pw.bentley.com:PWIDOT\Documents\IDOT Offices\District 5\Projects\D570F56\CADData\CADsheets\D570F56-sht-Detail-District 5 Detail.dgn

USER NAME = PiersonTJ	DESIGNED -	REVISED - 12/06 TJB	
	DRAWN -	REVISED - 09/07 KAG	
PLOT SCALE = 40.0000 ' / in.	CHECKED -	REVISED -	
PLOT DATE = 1/24/2022	DATE -	REVISED -	

STATE OF ILLINOIS
DEPARTMENT OF TRANSPORTATION

MAILBOX TURNOUT (RURAL)

SCALE: N.T.S. | SHEET 1 OF 1 SHEETS | STA. TO STA.

F.A.P. RTE.	SECTION	COUNTY	TOTAL SHEETS	SHEET NO.
800	*	CHAMPAIGN	51	22
		CONTRACT NO. 70F56		
		ILLINOIS	FED. AID PROJECT	

* (28-X1, 29-X1)HSIP 22-2

PROJECTS WITHOUT RECONSTRUCTION

S.M.A.R.T. IMPROVEMENTS
(POLICY RESURFACING; BDE 53–4.03; 1½")

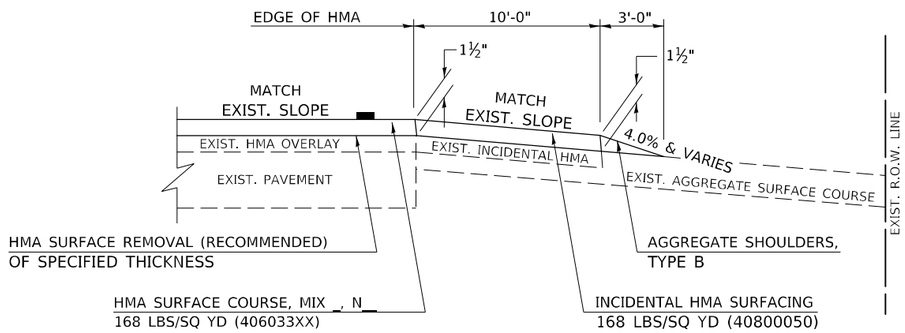

EXISTING AGGREGATE ENTRANCE

"3P" OR "3R" IMPROVEMENTS
(POLICY RESURFACING; BDE 53–4.02; 2¼" OR 2½" ON BARE CONCRETE)

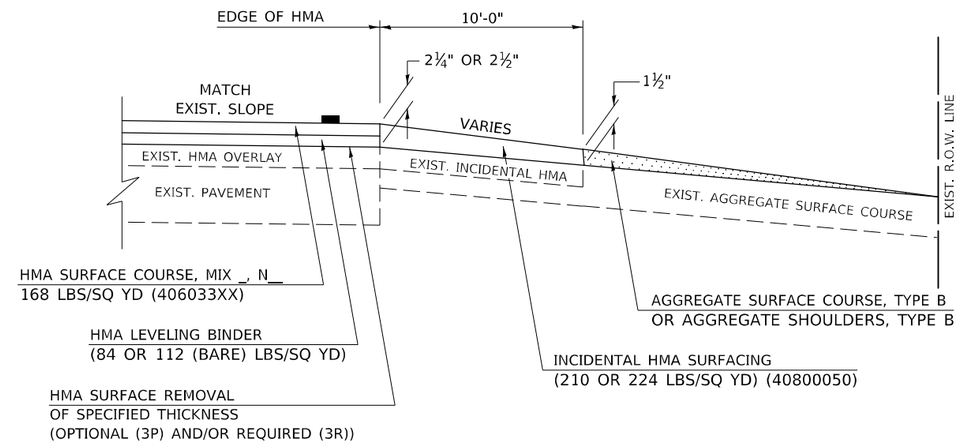

EXISTING AGGREGATE ENTRANCE

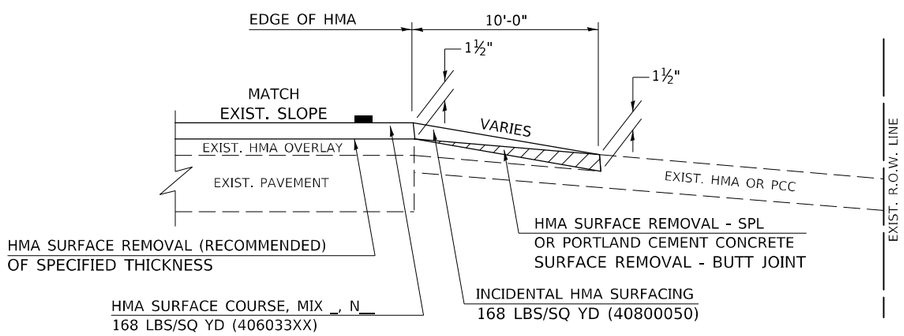

EXISTING HMA OR PCC ENTRANCE

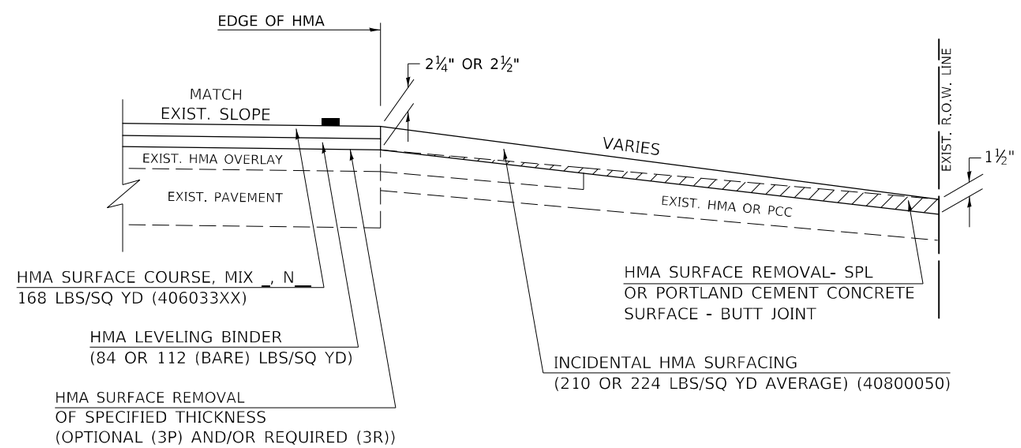

EXISTING HMA OR PCC ENTRANCE

Note: All dimensions are in INCHES
(millimeters) unless otherwise shown.

DESIGNER NOTE: SEE PLAN PREPARATION MEMORANDUM 40-09

MODEL: $MODELNAME$
FILE NAME: pw:\\ildot-pw.bentley.com:PWIDOT\Documents\IDOT Offices\District 5\Project\D570F56\CADData\CADsheets\D570F56-sht-Detail-District 5 Details.dgn

USER NAME = PiersonTJ	DESIGNED -	REVISED -	09/07 KAG
	DRAWN -	REVISED -	05/08 KJT
PLOT SCALE = 40.0000 ' / in.	CHECKED -	REVISED -	04/10 KJT
PLOT DATE = 1/24/2022	DATE -	REVISED -	3/6/17 SWN

STATE OF ILLINOIS
DEPARTMENT OF TRANSPORTATION

PRIVATE COMMERCIAL ENTRANCES
(NONCOMMERCIAL AND COMMERCIAL RURAL)

SCALE: N.T.S. | SHEET 1 OF 2 SHEETS | STA. TO STA.

DISTRICT 5 DETAIL NO. 40800050C

F.A.P. RTE.	SECTION	COUNTY	TOTAL SHEETS	SHEET NO.
800	*	CHAMPAIGN	51	23
		CONTRACT NO. 70F56		
		ILLINOIS	FED. AID PROJECT	

* (28-X1, 29-X1)HSIP 22-2

PROJECTS WITH RECONSTRUCTION

(3R IMPROVEMENTS)

AGGREGATE ENTRANCE

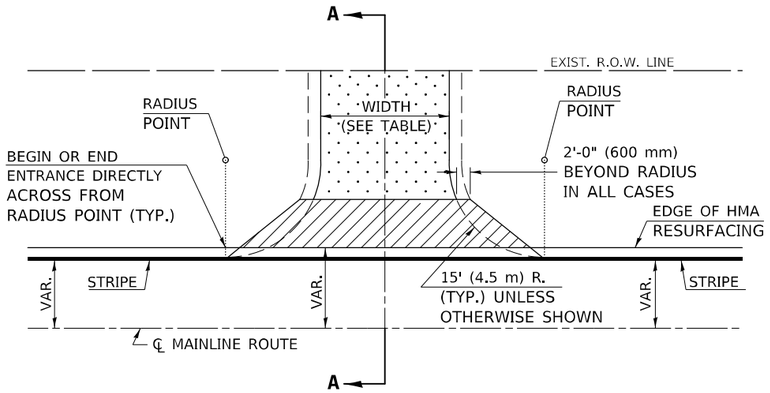

TYPICAL APPLICATION

HMA OR PCC ENTRANCE

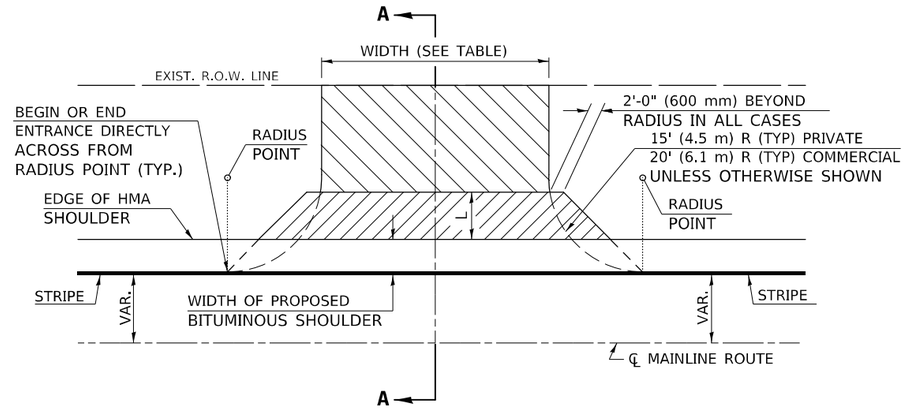

TYPICAL APPLICATION

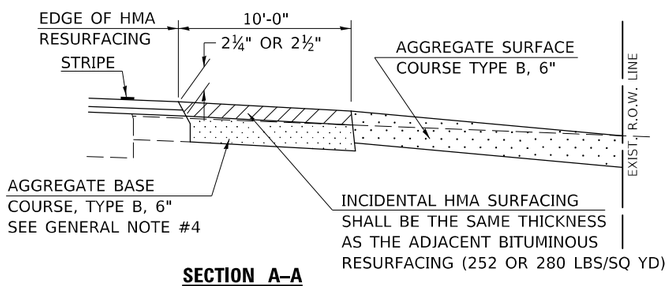

SECTION A–A

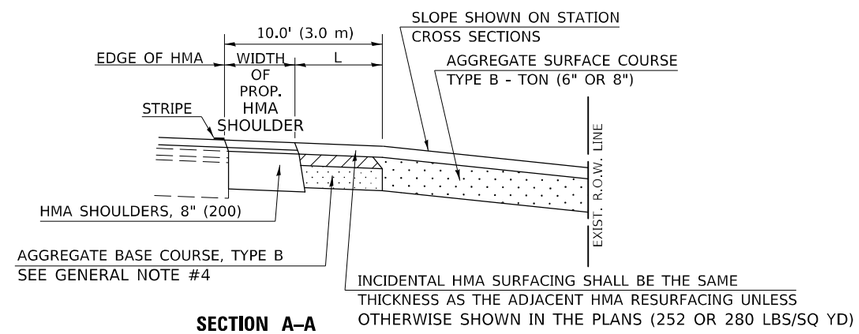

SECTION A–A
"HMA EXAMPLE"

GENERAL NOTES

1. THE EXISTING SURFACE SHALL BE PREPARED IN ACCORDANCE WITH SECTION 408 OF THE STANDARD SPECIFICATIONS.
2. ANY NECESSARY WORK BEHIND THE HMA SHOULDER OR THE INCIDENTAL HMA SURFACING SHALL BE AS SHOWN IN THE PLANS AND/OR AS DIRECTED BY THE ENGINEER.
3. EARTH EXCAVATION REQUIRED FOR THE CONSTRUCTION OF THE AGGREGATE SURFACE COURSE SHALL BE INCLUDED IN THE COST OF AGGREGATE SURFACE COURSE.
4. AGGREGATE BASE COURSE, TYPE B, 6" (150 mm) MIN. SHALL BE USED WHERE IN THE OPINION OF THE ENGINEER THERE IS NOT SUFFICIENT BASE MATERIAL FOR THE PROPOSED ENTRANCES. THIS MATERIAL SHALL GENERALLY BE USED TO WIDEN ANY EXISTING RETURN OR TO CONSTRUCT NEW
5. ENTRANCES WHERE NONE NOW EXISTS.
6. THE AGGREGATE BASE COURSE SHALL BE CONSTRUCTED 12" (300 mm) WIDER THAN THE SURFACE DIMENSIONS AS SHOWN ABOVE.
7. EXISTING FIELD ENTRANCES OF AGGREGATE OR EARTH WITH NO HMA APRON SHALL NOT RECEIVE A NEW HMA APRON WITHOUT PROPER APPROVAL THROUGH THE BUREAU OF OPERATIONS "POLICY ON PERMITS FOR ACCESS DRIVEWAYS TO STATE HIGHWAYS".

   TO ASSURE APPROPRIATE ACCESS POLICIES ARE FOLLOWED ALL NEW ACCESS SHALL BE APPLIED FOR THROUGH THE BUREAU OF OPERATIONS PERMIT APPLICATION PROCESS. PLAN PREPARATION MEMORANDUMS 40-09 ALONG WITH DISTRICT PROJECT IMPLEMENTATION MEMO 104/01 DISCUSS THIS PROCEDURE.

RURAL ENTRANCE DESIGN STANDARDS (PPM 40-09)

	NEW CONSTRUCTION & 3R with CONSTRUCTION								3R w/out RECONSTRUCTION, 3P, SMART & CM					
	NONCOMMERCIAL					COMMERCIAL			NONCOMMERCIAL			COMMERCIAL		
	PRIVATE & FIELD			FIELD W/FARM IMPLEMENTS					PRIVATE & FIELD					
DESIGN ELEMENT	min.	des.	max.	min.	max.	min.	des.	max.	min.	des.	max.	min.	des.	max.
SURFACE WIDTH (FT)	12	16	24	24	30	1 LANE, 1 WAY						1 LANE, 1 WAY		
						14	16	24						
						2 LANE, 2 WAY						2 LANE, 2 WAY		
						24	30	35						
RADIUS (FT)	15	25	40	30		20	30	50	resurface existing configuration; existing aggregate or earth entrances shall have the continuation of aggregate shoulders placed behind them					
SHOULDER WIDTH (FT)	2	2		2		1	3							
SHOULDER SLOPE (%)	2	4	6	4		2	4	6						
ENTRANCE GRADE (%)	0	2 to 5	10 or 12	2 to 5	10 or 12	0	2 to 5	8 or 10						
SIDE SLOPE (FT)	1:10	1:6	1:4	1:6	1:4	1:10	1:6	1:4						
SURFACE TYPE														
INCIDENTAL HMA SURFACING (INCH)		2		2		3 or 4			taper from hma resurfacing thickness (2 1/2", 2 1/4" or 1 1/2") to 1 1/2" to minimize aggregate shoulder					
AGGREGATE SURFACE COURSE, TYPE B (INCH)		6		6		8			if applicable, use items: Preparation of Base & Aggregate Base Repair; see PPM 30-02					
PCC DRIVEWAY PAVEMENT (INCH)		6						6 or 8						

Note: All dimensions are in INCHES (millimeters) unless otherwise shown.

DISTRICT 5 DETAIL NO. 40800050C

DESIGNER NOTE: SEE PLAN PREPARATION MEMORANDUM 40-09

MODEL: $MODELNAME
FILE NAME: pw:\\ildot-pw.bentley.com:PWIDOT\Documents\IDOT Offices\District 5\Projects\D570F56\CADData\CADsheets\D570F56-Dtl-Detail-District 5 Detail.dgn

USER NAME = PiersonTJ	DESIGNED -	REVISED -	09/07 KAG
	DRAWN -	REVISED -	05/08 KJT
PLOT SCALE = 40.0000 ' / in.	CHECKED -	REVISED -	04/10 KJT
PLOT DATE = 1/24/2022	DATE -	REVISED -	3/6/17 SWN

STATE OF ILLINOIS
DEPARTMENT OF TRANSPORTATION

PRIVATE COMMERCIAL ENTRANCES
(NONCOMMERCIAL AND COMMERCIAL RURAL)

SCALE: N.T.S. | SHEET 2 OF 2 SHEETS | STA. | TO STA.

F.A.P. RTE.	SECTION	COUNTY	TOTAL SHEETS	SHEET NO.
800	*	CHAMPAIGN	51	24
		CONTRACT NO. 70F56		
	ILLINOIS	FED. AID PROJECT		

* (28-X1, 29-X1)HSIP 22-2

TO BE INSTALLED IN ALL PAVEMENT TYPES FOR PRESERVING PERMANENT SURVEY MARKERS (PI'S, PT'S, PC'S, POC'S, & POT'S) AND LAND SURVEY MONUMENTS (SECTION OR SUBSECTION CORNERS)

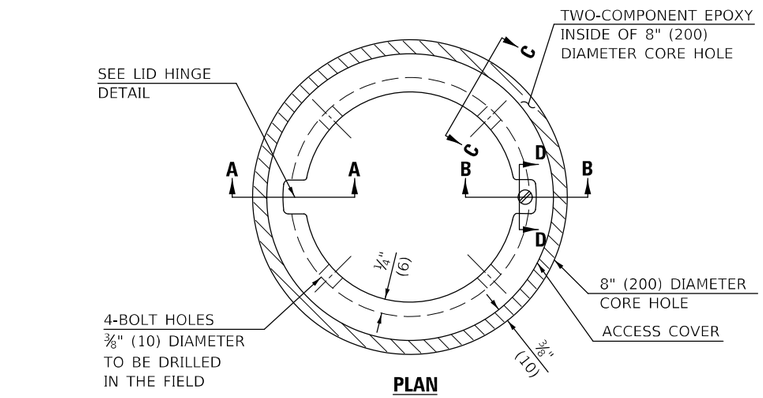

PLAN

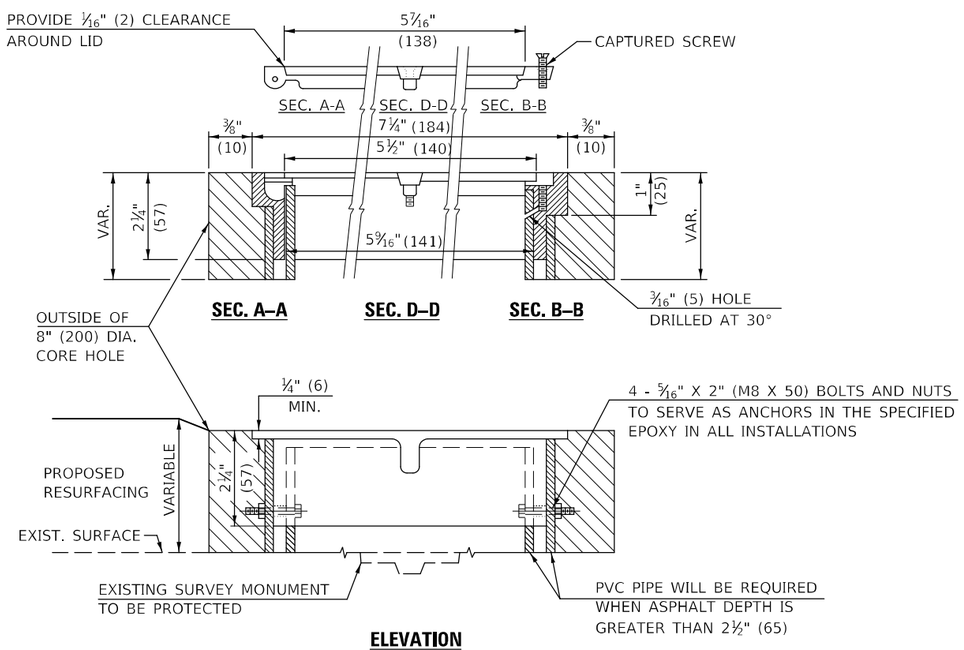

SEC. A–A **SEC. D–D** **SEC. B–B**

ELEVATION

LEGEND

- ALUMINUM CASTING
- 5" (125) OR 6" (150) P.V.C. PIPE
- TWO-COMPONENT EPOXY

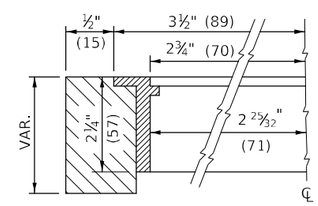

SECTION C–C

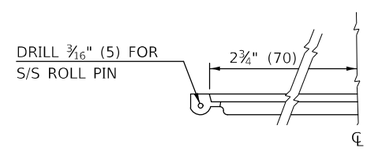

LID HINGE DETAIL

SPECIFICATIONS FOR ACCESS COVER FOR USE WITH SURVEY MARKER VAULT(S) AND SURVEY MARKER COVER ASSEMBLY(S): THE ACCESS COVER WILL BE CAST FROM A SPECIAL ALUMINUM ALLOY THAT IS COMPARABLE TO BRONZE IN HARDNESS. THE ACCESS COVER SHALL BE SPECIALLY ENGINEERED AND DESIGNED TO PROVIDE A SNUG FIT, INCORPORATING EQUIDISTANT LOCKING RIDGES, INSIDE A STANDARD 6" (150 mm) DIAMETER, OR OUTSIDE A STANDARD 5" (125 mm) DIAMETER, SCHEDULE 40 PVC PIPE. THE ACCESS COVER SHALL HAVE SPECIAL UNIFORM 1" (25 mm) THICK TOP SURFACE TO PERMIT INFORMATION TO BE EASILY MACHINE-STAMPED INTO IT. THE ACCESS COVER SHALL INCLUDE A STAINLESS CAPTURED SCREW AND AN OPPOSING RECESSED HINGE ASSEMBLY AS ITS LOCKING MECHANISM. THE ACCESS COVER SHALL INCORPORATE A SPECIAL ACCESS HOLE FOR CLEANING AND DRAINAGE, DRILLED AT 30° INSIDE THE RING OF THE ACCESS COVER, TO THE DRILLED AND TAPPED HOLE PROVIDED FOR THE STAINLESS CAPTURED SCREW. COMPOSITION: ALUMINUM 92-93%; MAGNESIUM 6.5-7.5%. STRENGTH: YIELD - 19,000-21,000 PSI (131-145 MPa); TENSILE - 38,000-44,000 PSI (262-303 MPa); ELONGATION - 10-15% IN 2" (50 mm). SPECIFICATIONS: ALLOY 535.0; QQ-A-601Es. NO EXCEPTIONS.

BILL OF MATERIAL
ALUMINUM CASTING OF THE DIMENSIONS AND SPECIFICATIONS SHOWN OR OTHER SUBJECT TO ENGINEER'S APPROVAL OF SHOP DRAWINGS, 4 EACH - 5/16" X 2" (M8 X 50) BOLTS WITH NUTS, EPOXY, 5" OR 6" (125 mm OR 150 mm) DIAMETER P.V.C. PIPE, SCHEDULE 40 (WHEN REQUIRED).

GENERAL NOTES

1. WORK SHALL NOT START ON THIS ITEM UNTIL THE FINAL LIFT OF SURFACE HAS BEEN COMPLETED.
2. THE SURVEY MONUMENT COVER ASSEMBLY SHALL BE CENTERED ABOVE THE SURVEY MONUMENT TO BE PROTECTED.
3. MODIFICATION OF THE ALUMINUM CASTING SHALL BE DONE BY GRINDING OR SAWING WHEN HEIGHT REDUCTION IS REQUIRED.
4. ALL SURVEY MONUMENT COVER ASSEMBLIES SHALL BE PLACED 1/4" (6 mm)± BELOW THE FINAL SURFACE.
5. ALUMINUM CASTING SHALL BE PLACED OVER A 5" (125 mm) P.V.C. PIPE OR INSIDE OF A 6" (150 mm) P.V.C. PIPE WHEN AN INCREASE IN HEIGHT IS REQUIRED.
6. THE CASTING SHALL BE ANCHORED IN THE 8" (200 mm) DIAMETER CORE HOLE WITH TWO-COMPONENT EPOXY CONFORMING TO APPLICABLE PORTIONS OF ARTICLE 1025.01 OF THE STANDARD SPECIFICATIONS.
7. THIS WORK WILL BE PAID FOR AT THE CONTRACT UNIT PRICE EACH FOR SURVEY MONUMENT COVER ASSEMBLY WHICH PRICE SHALL INCLUDE ALL LABOR AND MATERIAL AS SPECIFIED INCLUDING CORING THE NEW PAVEMENT SURFACE AND EPOXY. NO ADDITIONAL COMPENSATION WILL BE ALLOWED.
8. THE 8" (200 mm) DIAMETER CORE HOLE SHALL BE SUBJECT TO THE APPROVAL OF THE ENGINEER.

Note: All dimensions are in INCHES (millimeters) unless otherwise shown.

DISTRICT 5 DETAIL NO. Z0070100

F.A.P. RTE.	SECTION	COUNTY	TOTAL SHEETS	SHEET NO.
800	*	CHAMPAIGN	51	25
		CONTRACT NO. 70F56		
		ILLINOIS	FED. AID PROJECT	

* (28-X1, 29-X1)HSIP 22-2

USER NAME = PiersonTJ	DESIGNED -	REVISED - 11/06	STATE OF ILLINOIS DEPARTMENT OF TRANSPORTATION
	DRAWN -	REVISED -	
PLOT SCALE = 40.0000 ' / in.	CHECKED -	REVISED -	
PLOT DATE = 1/24/2022	DATE -	REVISED -	

SURVEY MONUMENT COVER ASSEMBLY

SCALE: N.T.S. | SHEET 1 OF 1 SHEETS | STA. TO STA.

MODEL: $MODELNAME$
FILE NAME: pw:\\ildot-pw.bentley.com:PWIDOT\Documents\IDOT Offices\District 5\Project\D570F56\CADData\CADsheets\D570F56-site-Detail-District 5 Detail.dgn

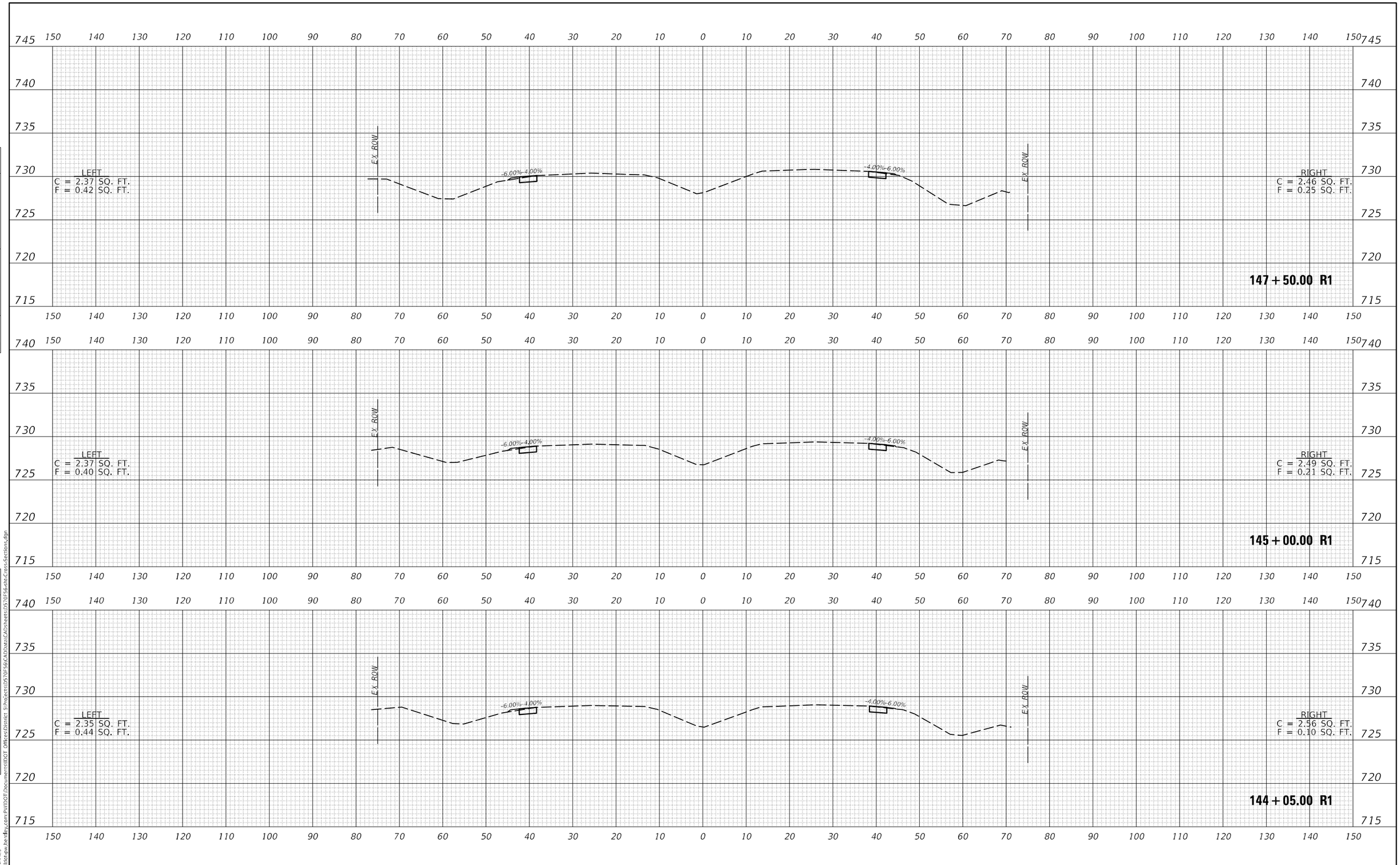

FINAL SURVEY		BY	DATE
NOTE BOOK	SURVEYED		
NO.	PLOTTED		
	TEMPLATE		
	AREAS		
	AREAS CHECKED		

ORIGINAL SURVEY		BY	DATE
NOTE BOOK	SURVEYED		
NO.	PLOTTED		
	TEMPLATE		
	AREAS		
	AREAS CHECKED		

MODEL: SMODELNAME
FILE NAME: pw:\\ildot-pw.bentley.com:PWIDOT\Documents\IDOT Offices\District 5\Projects\D570F56\CAD\data\CAD sheets\D570F56-sht-Cross-Sections.dgn

USER NAME = PiersonTJ	DESIGNED -	REVISED -	
	DRAWN -	REVISED -	
PLOT SCALE = 20.0000 ' / in.	CHECKED -	REVISED -	
PLOT DATE = 1/24/2022	DATE -	REVISED -	

STATE OF ILLINOIS
DEPARTMENT OF TRANSPORTATION

FAP 800 (US 45) CROSS–SECTIONS

SCALE: 1" = 10' | SHEET 1 OF 26 SHEETS | STA. 144+05.00 R1 TO STA. 147+50.00 R1

F.A.P. RTE.	SECTION	COUNTY	TOTAL SHEETS	SHEET NO.
800	*	CHAMPAIGN	51	26
		CONTRACT NO. 70F56		
		ILLINOIS	FED. AID PROJECT	

* (28-X1, 29-X1)HSIP 22-2

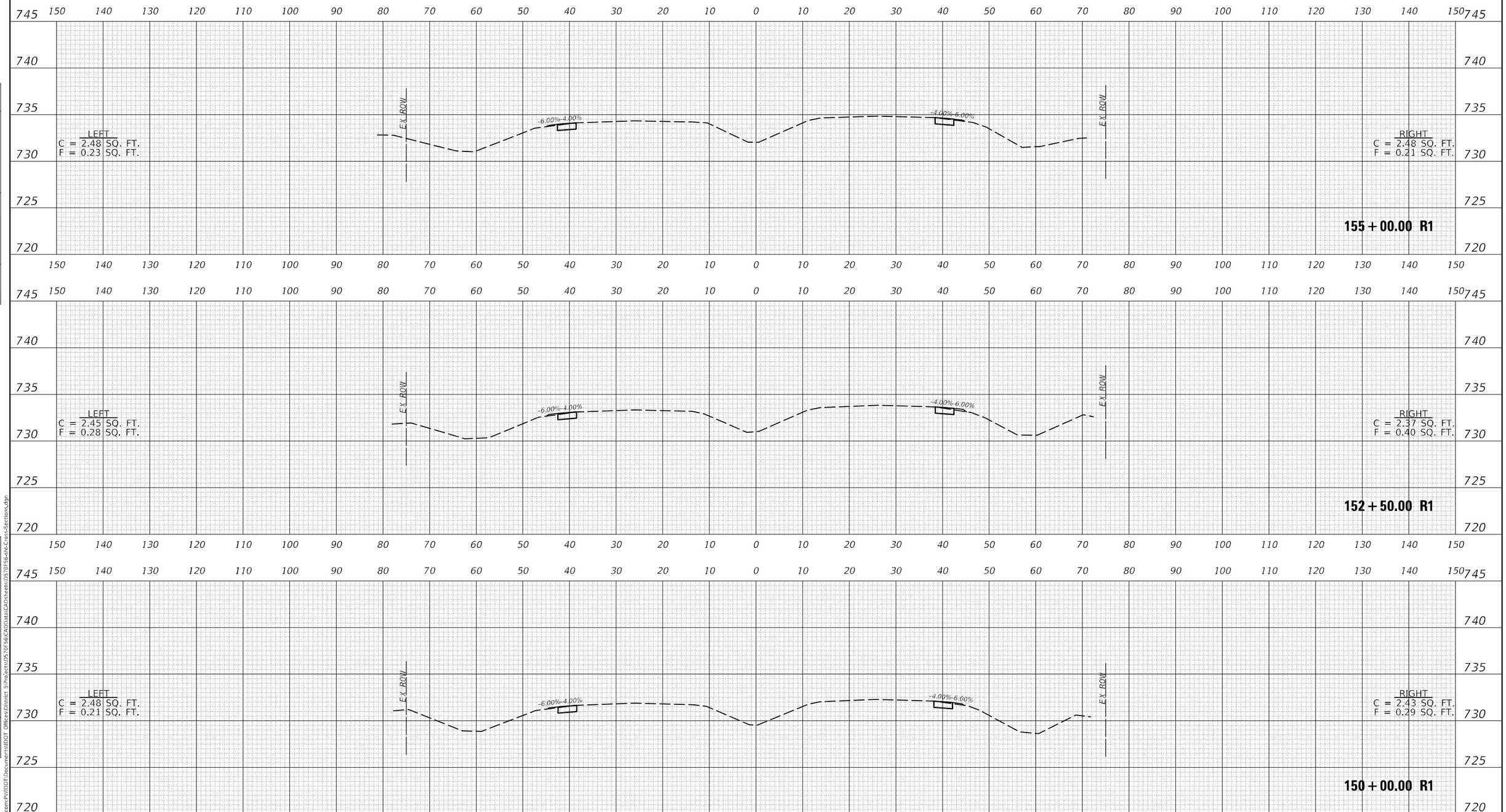

FINAL SURVEY		BY	DATE
SURVEYED			
PLOTTED			
TEMPLATE			
AREAS			
AREAS CHECKED			
NOTE BOOK			
NO.			

ORIGINAL SURVEY		BY	DATE
SURVEYED			
PLOTTED			
TEMPLATE			
AREAS			
AREAS CHECKED			
NOTE BOOK			
NO.			

MODEL: SMODELNAME5
FILE NAME: pw:\\ildot-pw.bentley.com:PWIDOT\Documents\IDOT Offices\District 5\Projects\D570F56\CAD\data\CAD sheets\D570F56-sht-Cross-Sections.dgn

USER NAME = PiersonTJ	DESIGNED -	REVISED -	
	DRAWN -	REVISED -	
PLOT SCALE = 20.0000 ' / in.	CHECKED -	REVISED -	
PLOT DATE = 1/24/2022	DATE -	REVISED -	

STATE OF ILLINOIS
DEPARTMENT OF TRANSPORTATION

FAP 800 (US 45) CROSS–SECTIONS

SCALE: 1" = 10' | SHEET 2 OF 26 SHEETS | STA. 150+00.00 R1 TO STA. 155+00.00 R1

F.A.P. RTE.	SECTION	COUNTY	TOTAL SHEETS	SHEET NO.
800	*	CHAMPAIGN	51	27
		CONTRACT NO. 70F56		
		ILLINOIS	FED. AID PROJECT	

* (28-X1, 29-X1)HSIP 22-2

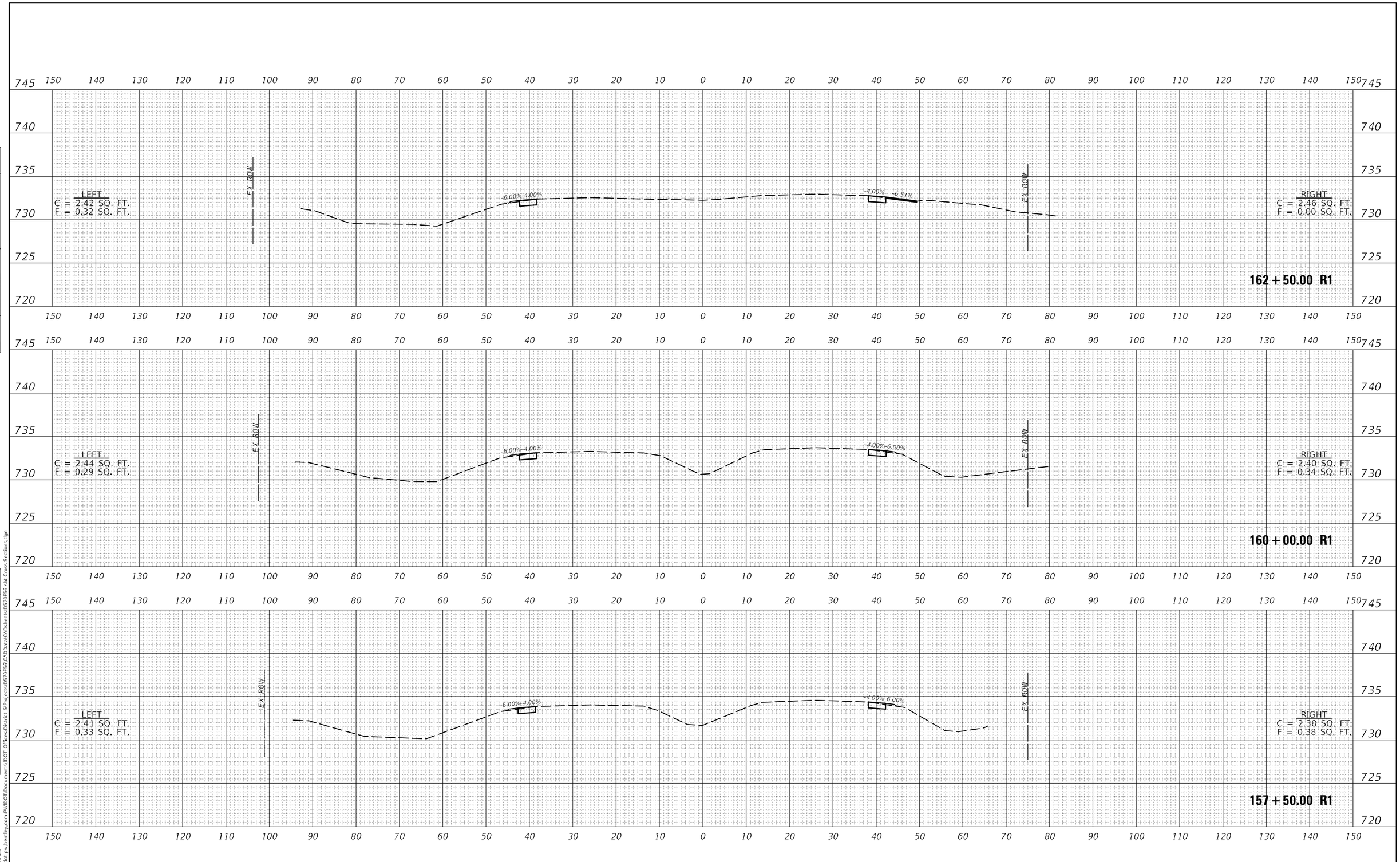

USER NAME = PiersonTJ	DESIGNED -	REVISED -	
	DRAWN -	REVISED -	
PLOT SCALE = 20.0000 ' / in.	CHECKED -	REVISED -	
PLOT DATE = 1/24/2022	DATE -	REVISED -	

STATE OF ILLINOIS
DEPARTMENT OF TRANSPORTATION

FAP 800 (US 45) CROSS-SECTIONS

SCALE: 1" = 10' | SHEET 3 OF 26 SHEETS | STA. 157+50.00 R1 TO STA. 162+50.00 R1

F.A.P. RTE.	SECTION	COUNTY	TOTAL SHEETS	SHEET NO.
800	*	CHAMPAIGN	51	28
		CONTRACT NO. 70F56		
		ILLINOIS	FED. AID PROJECT	

* (28-X1, 29-X1)HSIP 22-2

FINAL SURVEY: SURVEYED, PLOTTED, TEMPLATE, AREAS, AREAS CHECKED, NOTE BOOK, NO., BY, DATE

ORIGINAL SURVEY: SURVEYED, PLOTTED, TEMPLATE, AREAS, AREAS CHECKED, NOTE BOOK, NO., BY, DATE

MODEL: $MODEL NAME$
FILE NAME: pw:\\dot-pw.bentley.com:PWIDOT\Documents\IDOT Offices\District 5\Projects\D570F56\CAD\data\CAD sheets\D570F56-sht-Cross-Sections.dgn

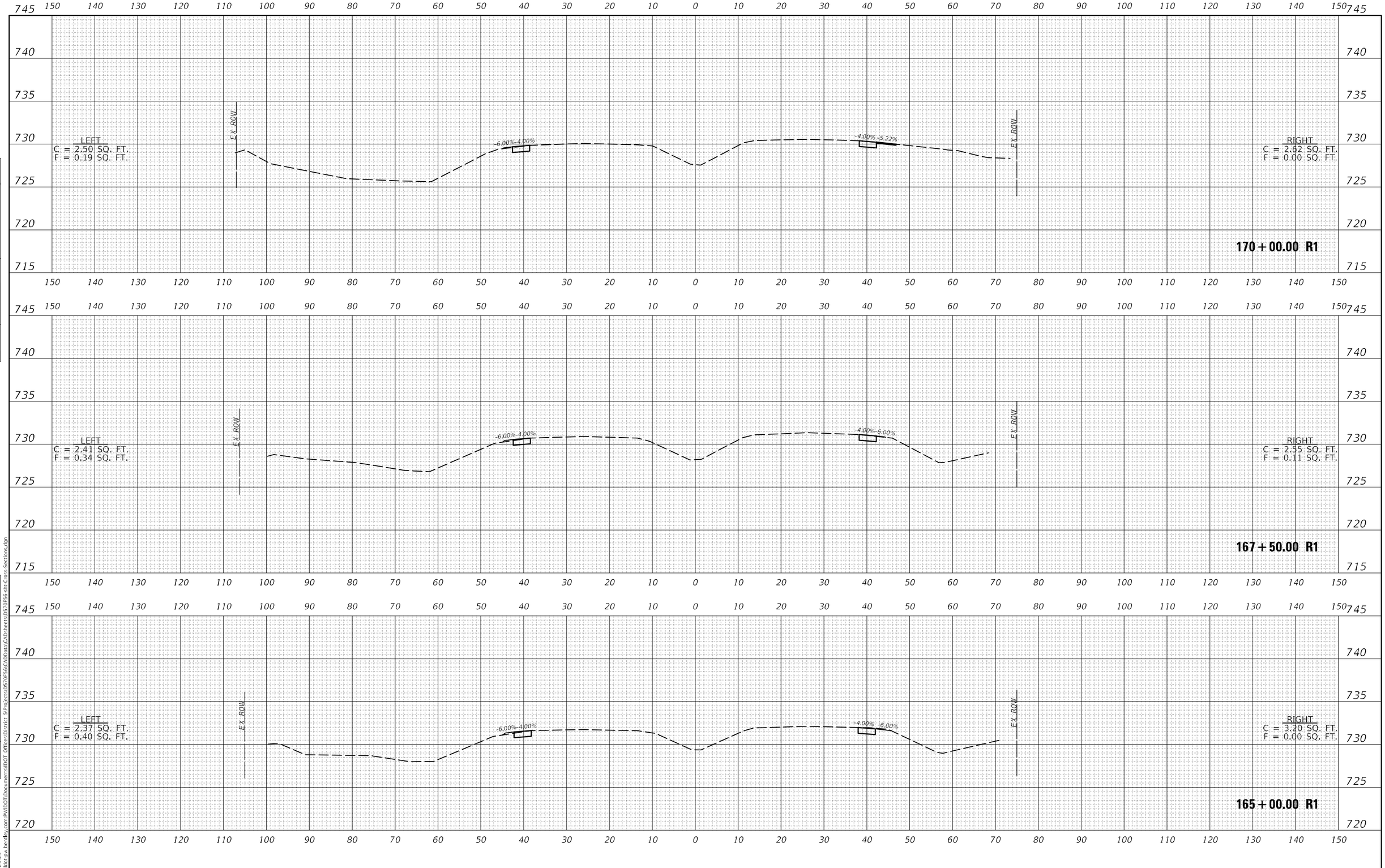

FINAL SURVEY	BY	DATE
SURVEYED		
PLOTTED		
TEMPLATE		
AREAS		
AREAS CHECKED		
NOTE BOOK NO.		

ORIGINAL SURVEY	BY	DATE
SURVEYED		
PLOTTED		
TEMPLATE		
AREAS		
AREAS CHECKED		
NOTE BOOK NO.		

MODEL: SMODELNAME5
FILE NAME: pw:\\ildot-pw.bentley.com:PWIDOT\Documents\IDOT Offices\District 5\Projects\D570F56\CAD\data\CAD sheets\D570F56-sht-Cross-Sections.dgn

USER NAME = PiersonTJ	DESIGNED -	REVISED -	
	DRAWN -	REVISED -	
PLOT SCALE = 20.0000 ' / in.	CHECKED -	REVISED -	
PLOT DATE = 1/24/2022	DATE -	REVISED -	

STATE OF ILLINOIS
DEPARTMENT OF TRANSPORTATION

FAP 800 (US 45) CROSS–SECTIONS

SCALE: 1" = 10' | SHEET 4 OF 26 SHEETS | STA. 165+00.00 R1 TO STA. 170+00.00 R1

F.A.P. RTE.	SECTION	COUNTY	TOTAL SHEETS	SHEET NO.
800	*	CHAMPAIGN	51	29
		CONTRACT NO. 70F56		
		ILLINOIS	FED. AID PROJECT	

* (28-X1, 29-X1)HSIP 22-2

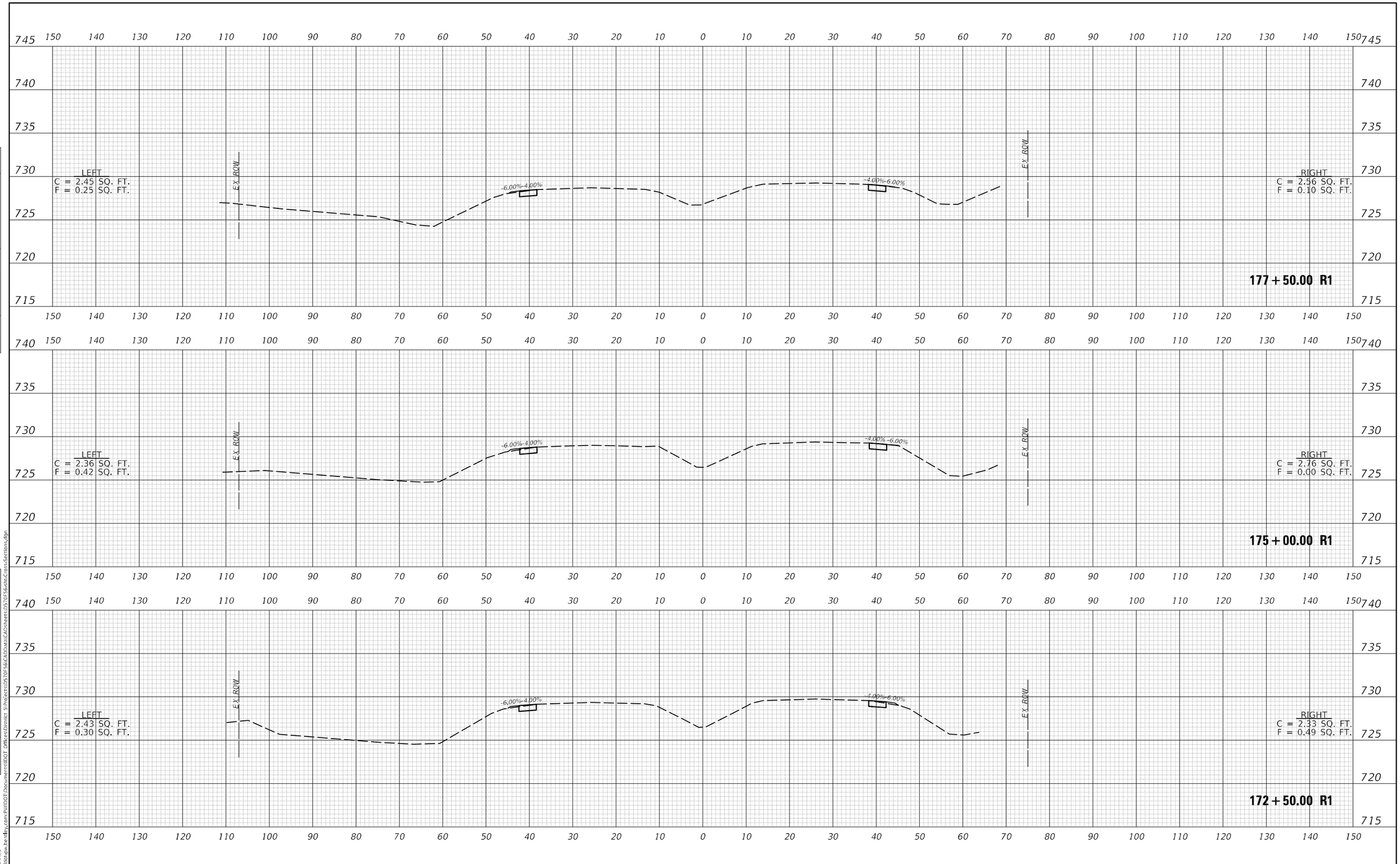

FINAL SURVEY	BY	DATE
SURVEYED		
PLOTTED		
TEMPLATE		
AREAS		
AREAS CHECKED		
NOTE BOOK NO.		

ORIGINAL SURVEY	BY	DATE
SURVEYED		
PLOTTED		
TEMPLATE		
AREAS		
AREAS CHECKED		
NOTE BOOK NO.		

MODEL: SMODELNAMES
FILE NAME: pw:\\ildot-pw.bentley.com:PWIDOT\Documents\IDOT Offices\District 5\Projects\D570F56\CAD\data\CAD sheets\D570F56-sht-Cross-Sections.dgn

USER NAME = PiersonTJ	DESIGNED -	REVISED -	
	DRAWN -	REVISED -	
PLOT SCALE = 20.0000 ' / in.	CHECKED -	REVISED -	
PLOT DATE = 1/24/2022	DATE -	REVISED -	

STATE OF ILLINOIS
DEPARTMENT OF TRANSPORTATION

FAP 800 (US 45) CROSS–SECTIONS

SCALE: 1" = 10' | SHEET 5 OF 26 SHEETS | STA. 172+50.00 R1 TO STA. 177+50.00 R1

F.A.P. RTE.	SECTION	COUNTY	TOTAL SHEETS	SHEET NO.
800	*	CHAMPAIGN	51	30
		CONTRACT NO. 70F56		
		ILLINOIS	FED. AID PROJECT	

* (28-X1, 29-X1)HSIP 22-2

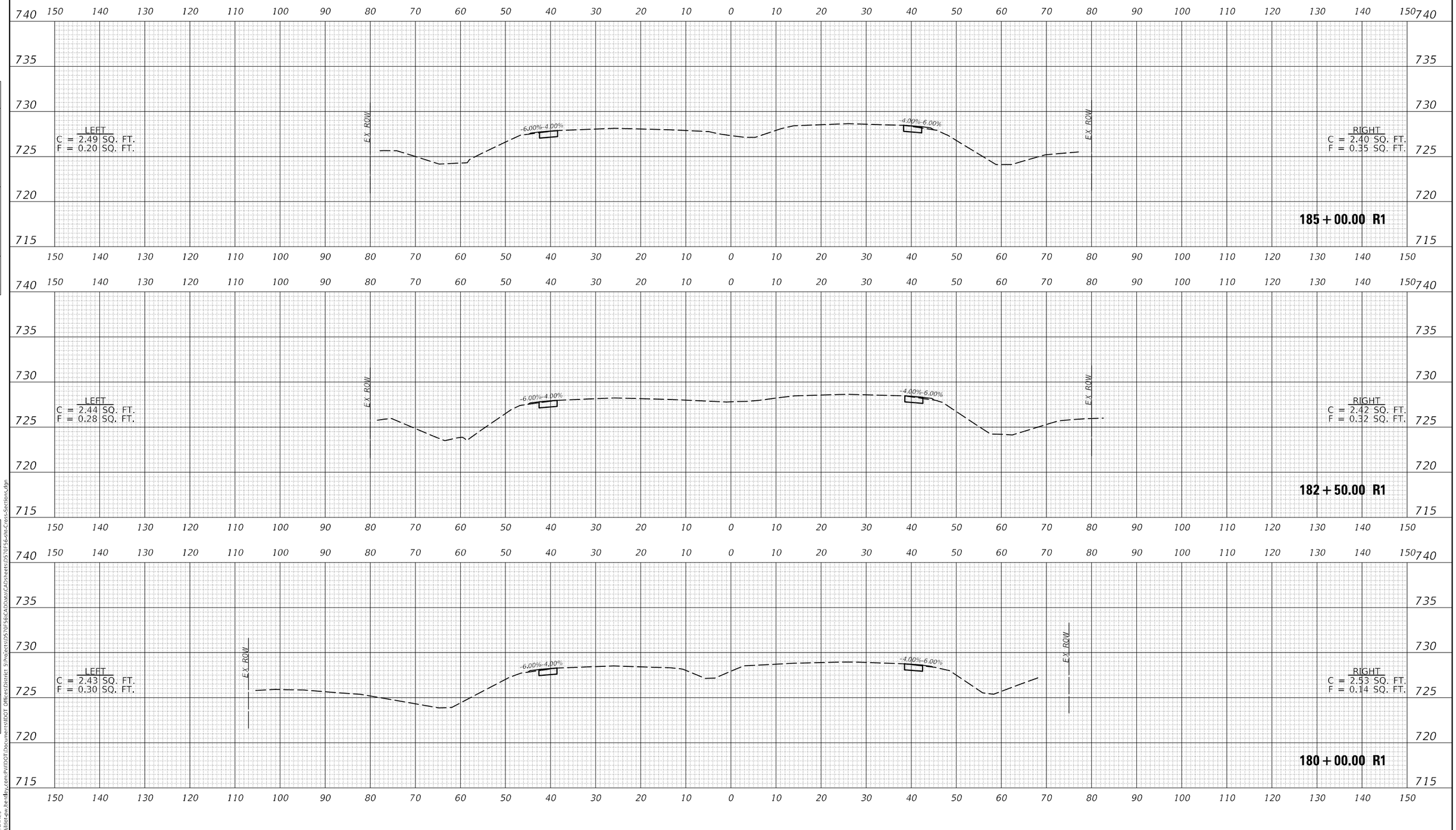

FINAL SURVEY	BY	DATE
SURVEYED		
PLOTTED		
TEMPLATE		
AREAS		
AREAS CHECKED		
NOTE BOOK NO.		

ORIGINAL SURVEY	BY	DATE
SURVEYED		
PLOTTED		
TEMPLATE		
AREAS		
AREAS CHECKED		
NOTE BOOK NO.		

MODEL: SMODELNAME5
FILE NAME: pw:\\ildot-pw.bentley.com:PWIDOT\Documents\IDOT Offices\District 5\Projects\D570F56\CAD\data\CAD\sheets\D570F56-sht-Cross-Sections.dgn

USER NAME = PiersonTJ	DESIGNED -	REVISED -	
	DRAWN -	REVISED -	
PLOT SCALE = 20.0000 ' / in.	CHECKED -	REVISED -	
PLOT DATE = 1/24/2022	DATE -	REVISED -	

STATE OF ILLINOIS
DEPARTMENT OF TRANSPORTATION

FAP 800 (US 45) CROSS-SECTIONS

SCALE: 1" = 10' | SHEET 6 OF 26 SHEETS | STA. 180+00.00 R1 TO STA. 185+00.00 R1

F.A.P. RTE.	SECTION	COUNTY	TOTAL SHEETS	SHEET NO.
800	*	CHAMPAIGN	51	31
		CONTRACT NO. 70F56		
		ILLINOIS	FED. AID PROJECT	

* (28-X1, 29-X1)HSIP 22-2

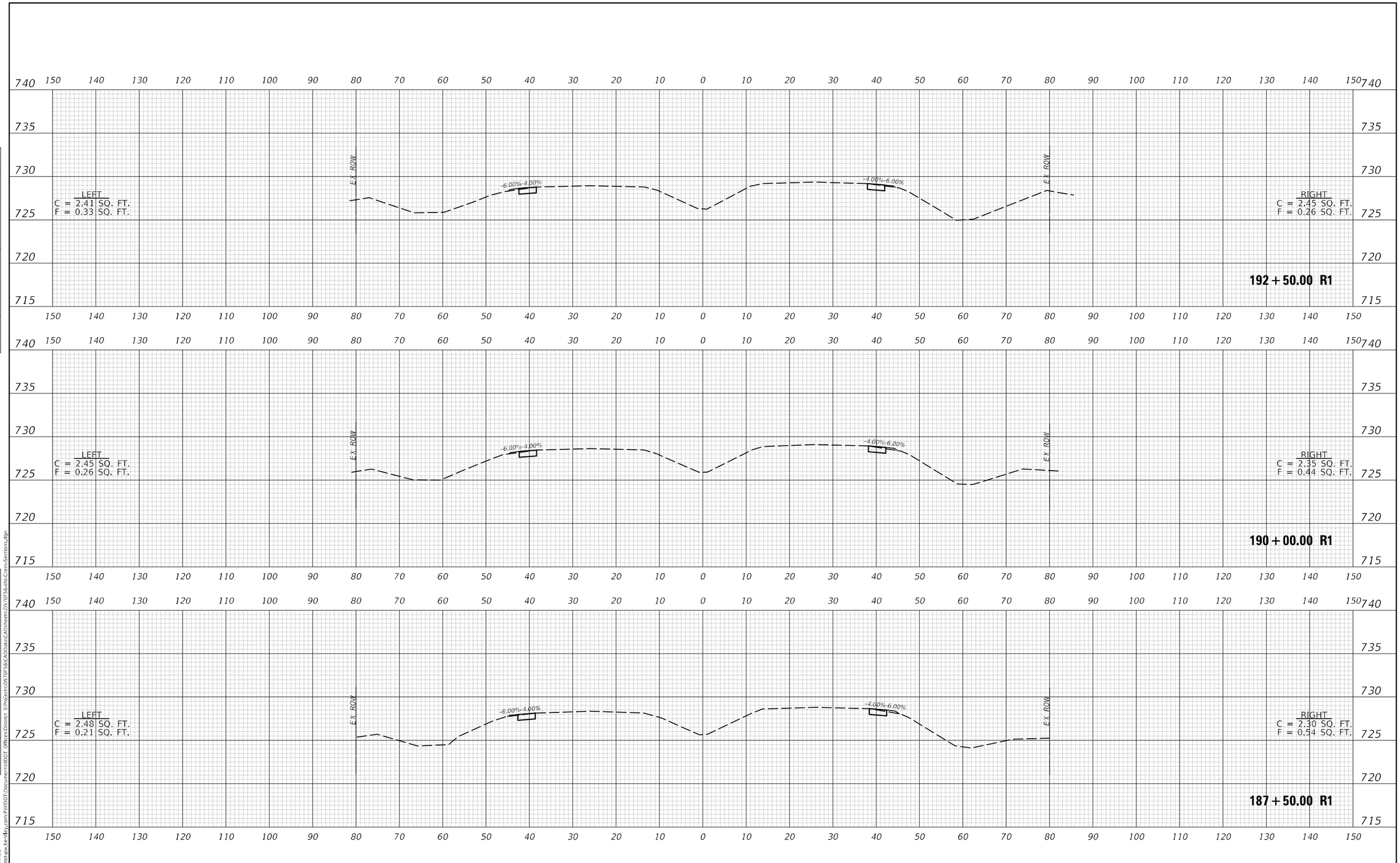

USER NAME = PiersonTJ	DESIGNED -	REVISED -
	DRAWN -	REVISED -
PLOT SCALE = 20.0000 ' / in.	CHECKED -	REVISED -
PLOT DATE = 1/24/2022	DATE -	REVISED -

STATE OF ILLINOIS
DEPARTMENT OF TRANSPORTATION

FAP 800 (US 45) CROSS–SECTIONS

SCALE: 1" = 10' | SHEET 7 OF 26 SHEETS | STA. 187+50.00 R1 TO STA. 192+50.00 R1

F.A.P. RTE.	SECTION	COUNTY	TOTAL SHEETS	SHEET NO.
800	*	CHAMPAIGN	51	32
		CONTRACT NO. 70F56		
	ILLINOIS	FED. AID PROJECT		

* (28-X1, 29-X1)HSIP 22-2

FINAL SURVEY | NOTE BOOK NO. | SURVEYED | PLOTTED | TEMPLATE | AREAS | AREAS CHECKED | BY | DATE

ORIGINAL SURVEY | NOTE BOOK NO. | SURVEYED | PLOTTED | TEMPLATE | AREAS | AREAS CHECKED | BY | DATE

MODEL: SMODELNAME5
FILE NAME: pw:\\ildot-pw.bentley.com:PWIDOT\Documents\IDOT Offices\District 5\Projects\D570F56\CAD\data\CAD\sheets\D570F56-Int-Cross-Sections.dgn

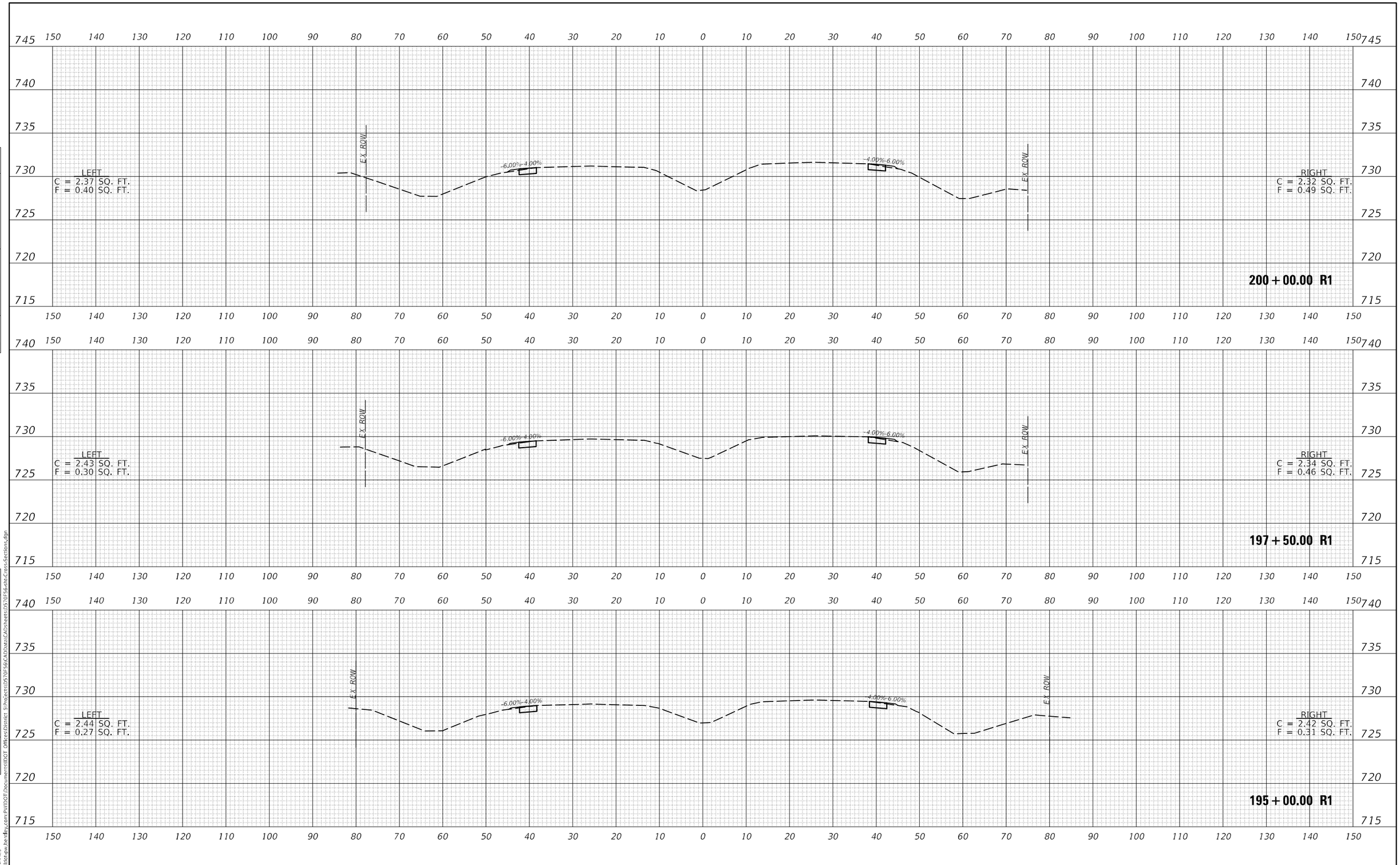

FINAL SURVEY	BY	DATE
SURVEYED		
PLOTTED		
TEMPLATE		
AREAS		
AREAS CHECKED		
NOTE BOOK NO.		

ORIGINAL SURVEY	BY	DATE
SURVEYED		
PLOTTED		
TEMPLATE		
AREAS		
AREAS CHECKED		
NOTE BOOK NO.		

MODEL: $MODELNAME$
FILE NAME: pw:\\ildot-pw.bentley.com:PWIDOT\Documents\IDOT Offices\District 5\Projects\D570F56\CAD\data\CAD sheets\D570F56-sht-Cross-Sections.dgn

USER NAME = PiersonTJ	DESIGNED -	REVISED -	
	DRAWN -	REVISED -	
PLOT SCALE = 20.0000 ' / in.	CHECKED -	REVISED -	
PLOT DATE = 1/24/2022	DATE -	REVISED -	

STATE OF ILLINOIS
DEPARTMENT OF TRANSPORTATION

FAP 800 (US 45) CROSS–SECTIONS

SCALE: 1" = 10' | SHEET 8 OF 26 SHEETS | STA. 195+00.00 R1 TO STA. 200+00.00 R1

F.A.P. RTE.	SECTION	COUNTY	TOTAL SHEETS	SHEET NO.
800	*	CHAMPAIGN	51	33
		CONTRACT NO. 70F56		
		ILLINOIS	FED. AID PROJECT	

* (28-X1, 29-X1)HSIP 22-2

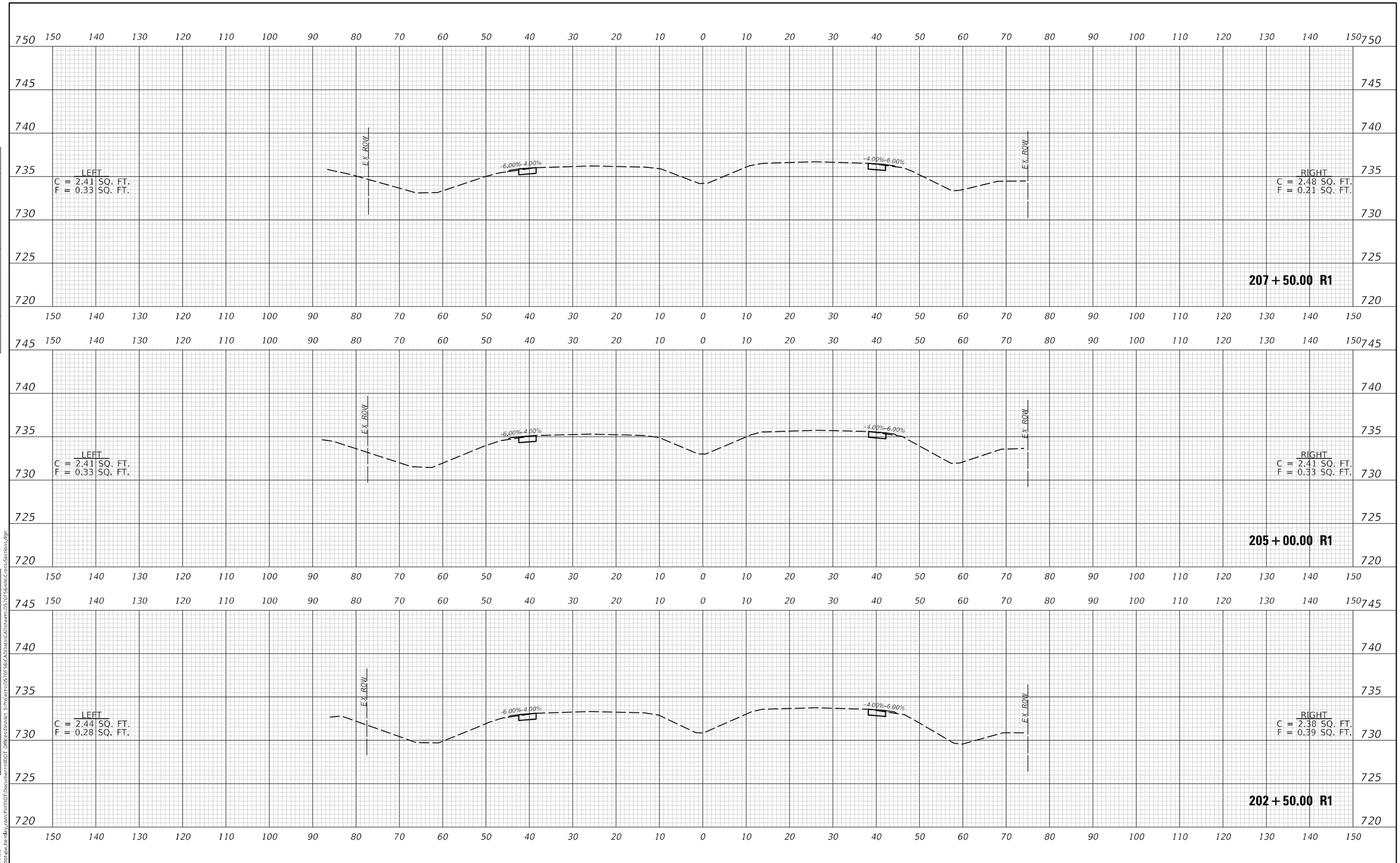

FINAL SURVEY	BY	DATE
SURVEYED		
PLOTTED		
TEMPLATE		
AREAS		
AREAS CHECKED		
NOTE BOOK NO.		

ORIGINAL SURVEY	BY	DATE
SURVEYED		
PLOTTED		
TEMPLATE		
AREAS		
AREAS CHECKED		
NOTE BOOK NO.		

MODEL: $MODEL$NAME$
FILE NAME: pw:\\ildot-pw.bentley.com:PWIDOT\Documents\IDOT Offices\District 5\Projects\D570F56\CAD\data\CAD sheets\D570F56-sht-Cross-Sections.dgn

USER NAME = PiersonTJ	DESIGNED -	REVISED -	
	DRAWN -	REVISED -	
PLOT SCALE = 20.0000 ' / in.	CHECKED -	REVISED -	
PLOT DATE = 1/24/2022	DATE -	REVISED -	

STATE OF ILLINOIS
DEPARTMENT OF TRANSPORTATION

FAP 800 (US 45) CROSS–SECTIONS

SCALE: 1" = 10' | SHEET 9 OF 26 SHEETS | STA. 202+50.00 R1 TO STA. 207+50.00 R1

F.A.P. RTE.	SECTION	COUNTY	TOTAL SHEETS	SHEET NO.
800	*	CHAMPAIGN	51	34
		CONTRACT NO. 70F56		
		ILLINOIS	FED. AID PROJECT	

* (28-X1, 29-X1)HSIP 22-2

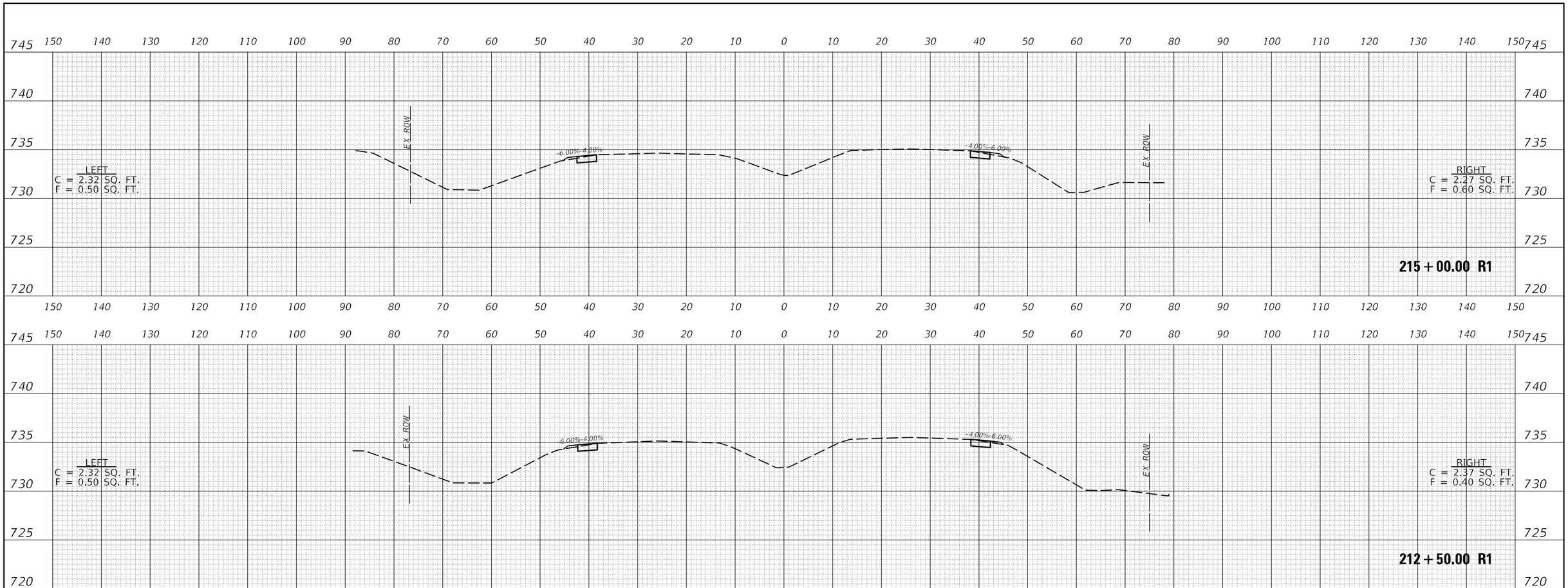

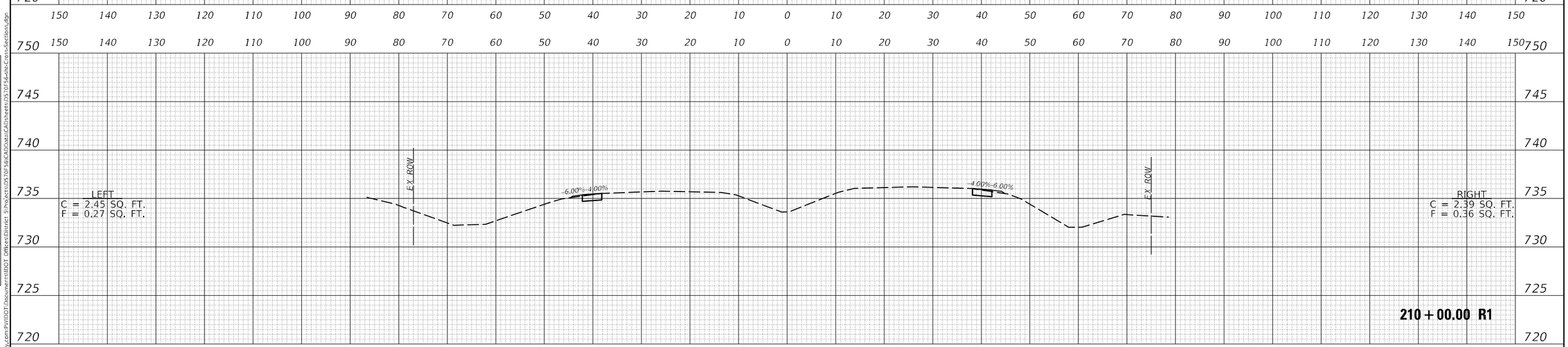

USER NAME = PiersonTJ	DESIGNED -	REVISED -	
	DRAWN -	REVISED -	
PLOT SCALE = 20.0000 ' / in.	CHECKED -	REVISED -	
PLOT DATE = 1/24/2022	DATE -	REVISED -	

STATE OF ILLINOIS
DEPARTMENT OF TRANSPORTATION

FAP 800 (US 45) CROSS–SECTIONS

SCALE: 1" = 10' | SHEET 10 OF 26 SHEETS | STA. 210+00.00 R1 TO STA. 215+00.00 R1

F.A.P. RTE.	SECTION	COUNTY	TOTAL SHEETS	SHEET NO.
800	*	CHAMPAIGN	51	35
		CONTRACT NO. 70F56		
		ILLINOIS	FED. AID PROJECT	

* (28-X1, 29-X1)HSIP 22-2

FINAL SURVEY — SURVEYED, PLOTTED, TEMPLATE, AREAS, AREAS CHECKED — NOTE BOOK NO. — BY — DATE

ORIGINAL SURVEY — SURVEYED, PLOTTED, TEMPLATE, AREAS, AREAS CHECKED — NOTE BOOK NO. — BY — DATE

MODEL: SMODELNAME5
FILE NAME: pw:\\ildot-pw.bentley.com:PWIDOT\Documents\IDOT Offices\District 5\Projects\D570F56\CAD\data\CAD\sheets\D570F56-sht-Cross-Sections.dgn

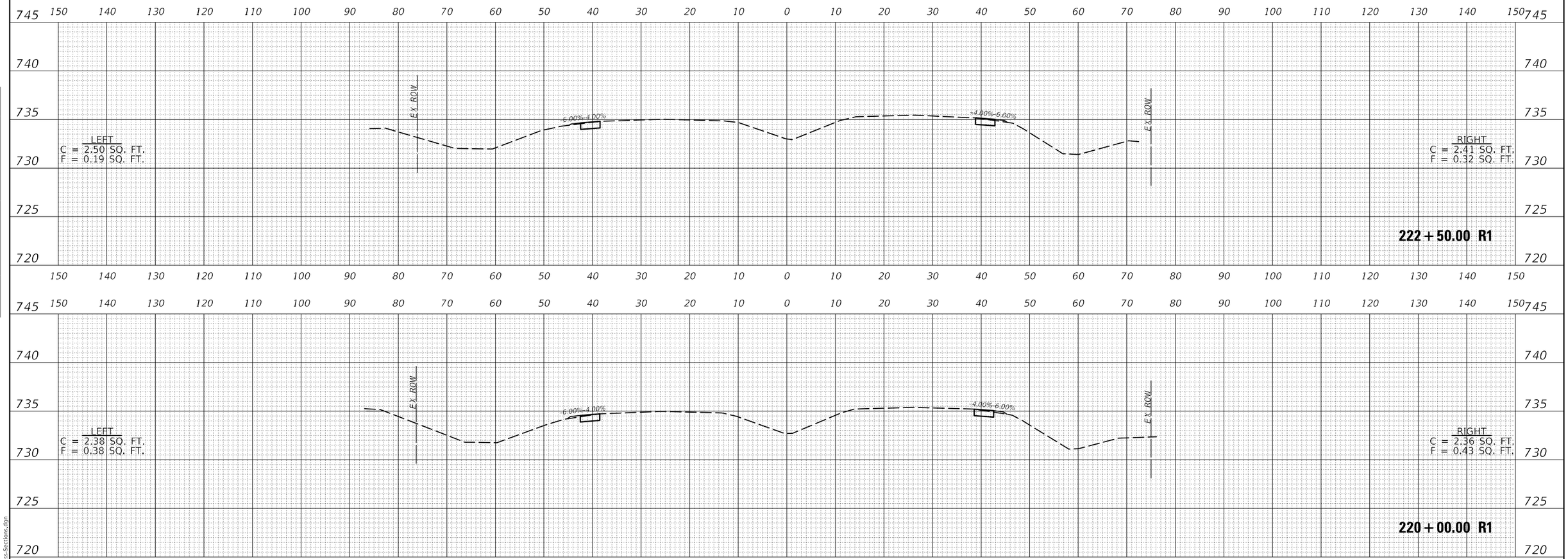

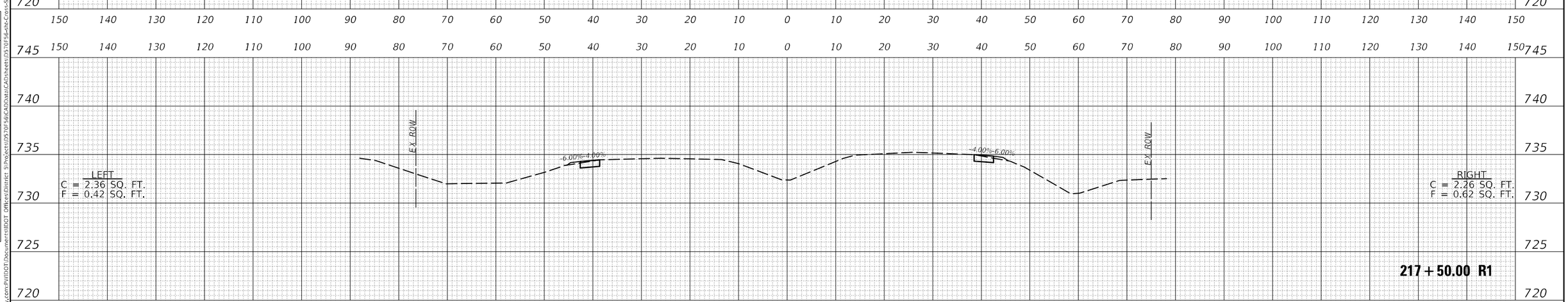

USER NAME = PiersonTJ	DESIGNED -	REVISED -	
	DRAWN -	REVISED -	
PLOT SCALE = 20.0000 ' / in.	CHECKED -	REVISED -	
PLOT DATE = 1/24/2022	DATE -	REVISED -	

STATE OF ILLINOIS
DEPARTMENT OF TRANSPORTATION

FAP 800 (US 45) CROSS–SECTIONS

SCALE: 1" = 10' | SHEET 11 OF 26 SHEETS | STA. 217+50.00 R1 TO STA. 222+50.00 R1

F.A.P. RTE.	SECTION	COUNTY	TOTAL SHEETS	SHEET NO.
800	*	CHAMPAIGN	51	36
		CONTRACT NO. 70F56		
		ILLINOIS	FED. AID PROJECT	

* (28-X1, 29-X1)HSIP 22-2

FINAL SURVEY | NOTE BOOK NO. | SURVEYED | PLOTTED | TEMPLATE | AREAS | AREAS CHECKED | BY | DATE

ORIGINAL SURVEY | NOTE BOOK NO. | SURVEYED | PLOTTED | TEMPLATE | AREAS | AREAS CHECKED | BY | DATE

MODEL: $MODEL$NAME
FILE NAME: pw:\\ildot-pw.bentley.com:PWIDOT\Documents\IDOT Offices\District 5\Projects\D570F56\CAD\data\CAD sheets\D570F56-sht-Cross-Sections.dgn

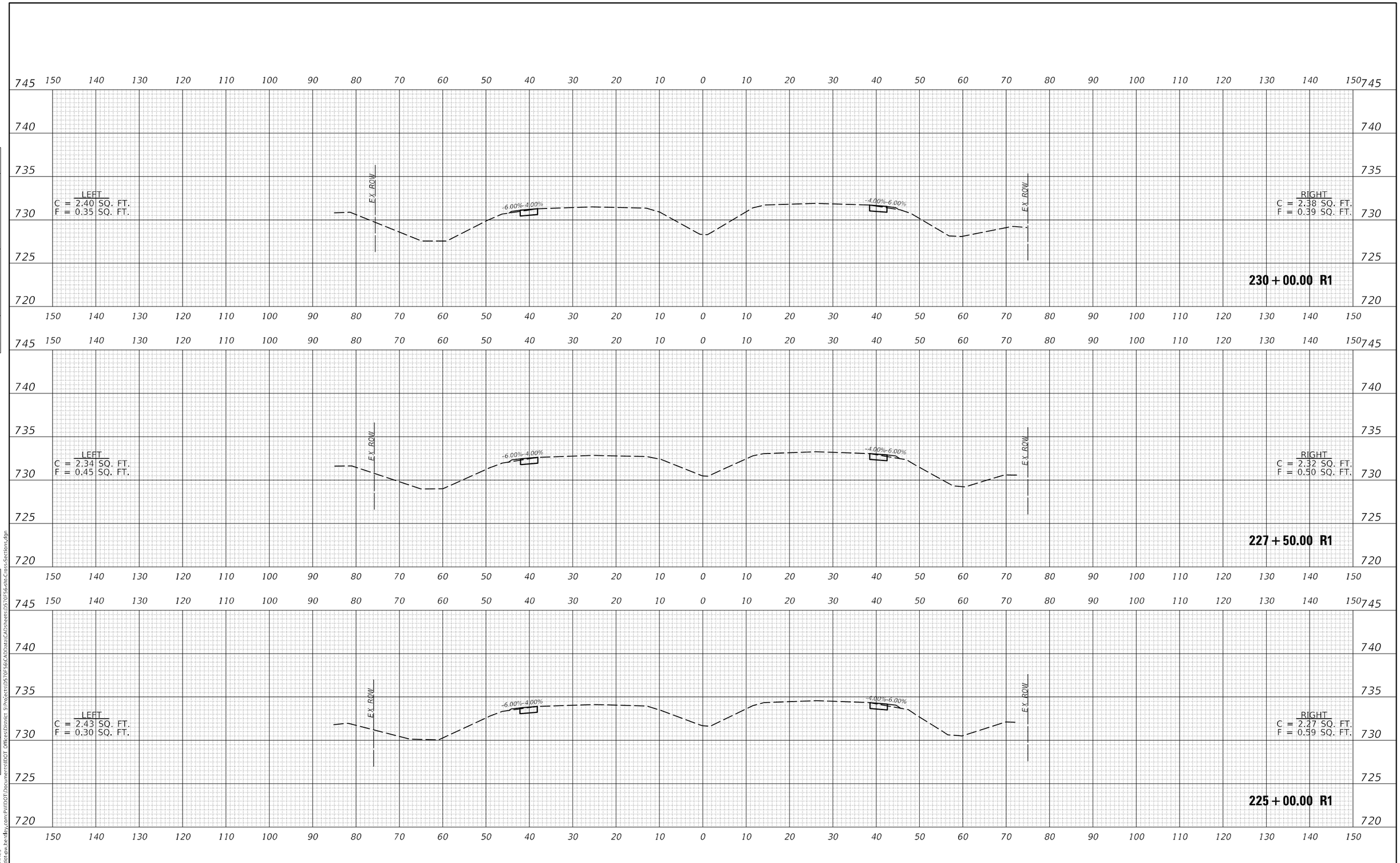

USER NAME = PiersonTJ	DESIGNED -	REVISED -	
	DRAWN -	REVISED -	
PLOT SCALE = 20.0000 ' / in.	CHECKED -	REVISED -	
PLOT DATE = 1/24/2022	DATE -	REVISED -	

STATE OF ILLINOIS
DEPARTMENT OF TRANSPORTATION

FAP 800 (US 45) CROSS–SECTIONS

SCALE: 1" = 10' | SHEET 12 OF 26 SHEETS | STA. 225+00.00 R1 TO STA. 230+00.00 R1

F.A.P. RTE.	SECTION	COUNTY	TOTAL SHEETS	SHEET NO.
800	*	CHAMPAIGN	51	37
		CONTRACT NO. 70F56		
		ILLINOIS	FED. AID PROJECT	

* (28-X1, 29-X1)HSIP 22-2

FINAL SURVEY | SURVEYED | PLOTTED | TEMPLATE | AREAS | AREAS CHECKED | NOTE BOOK NO. | BY | DATE

ORIGINAL SURVEY | SURVEYED | PLOTTED | TEMPLATE | AREAS | AREAS CHECKED | NOTE BOOK NO. | BY | DATE

MODEL: SMODELNAME5
FILE NAME: pw:\\ildot-pw.bentley.com:PWIDOT\Documents\IDOT Offices\District 5\Projects\D570F56\CAD\data\CAD\sheets\D570F56-sht-Cross-Sections.dgn

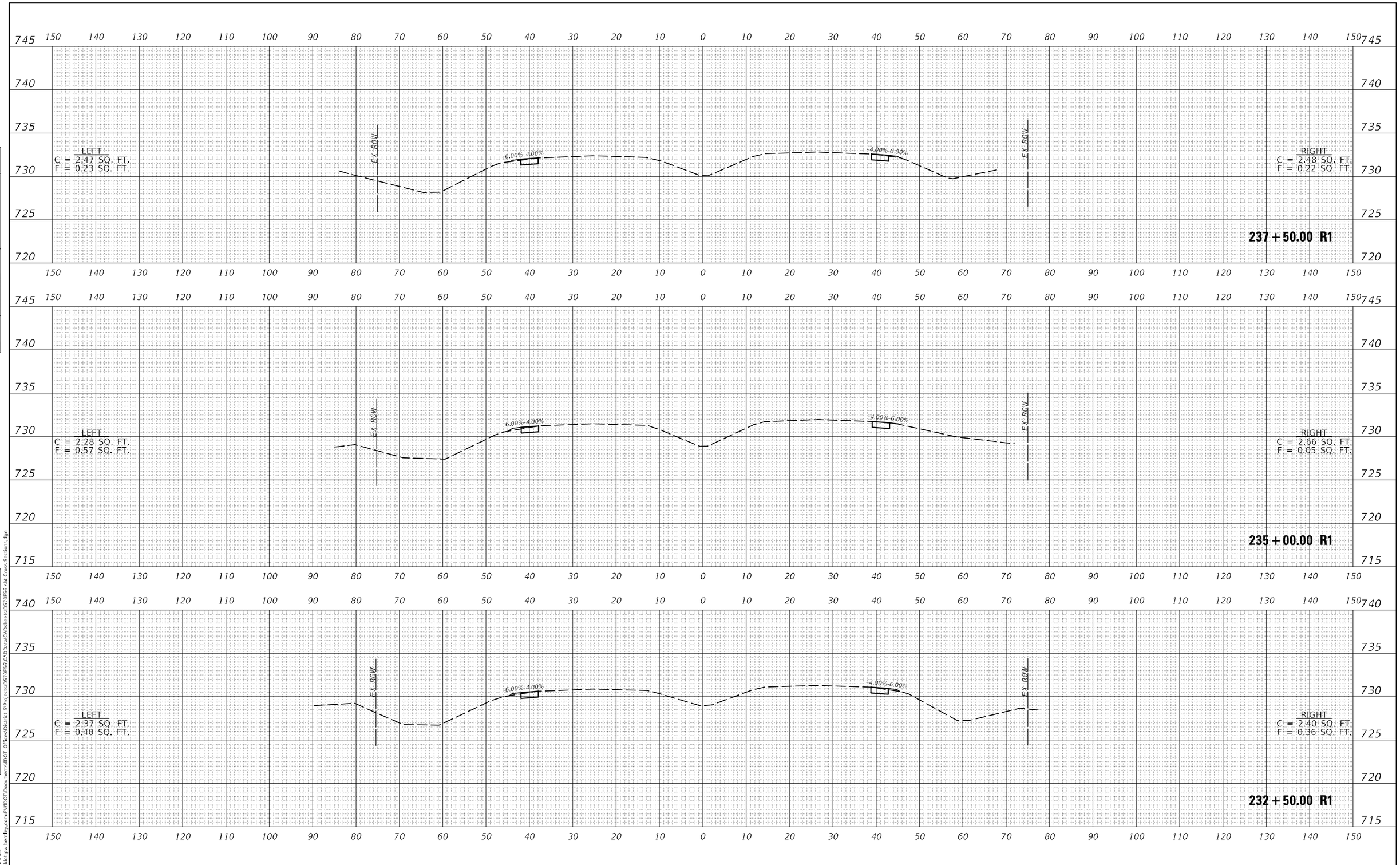

FINAL SURVEY	BY	DATE
SURVEYED		
PLOTTED		
TEMPLATE		
AREAS		
AREAS CHECKED		
NOTE BOOK NO.		

ORIGINAL SURVEY	BY	DATE
SURVEYED		
PLOTTED		
TEMPLATE		
AREAS		
AREAS CHECKED		
NOTE BOOK NO.		

MODEL: SMODELNAME5
FILE NAME: pw:\\ildot-pw.bentley.com:PWIDOT\Documents\IDOT Offices\District 5\Projects\D570F56\CAD\data\CAD sheets\D570F56-sht-Cross-Sections.dgn

USER NAME = PiersonTJ	DESIGNED -	REVISED -	
	DRAWN -	REVISED -	
PLOT SCALE = 20.0000 ' / in.	CHECKED -	REVISED -	
PLOT DATE = 1/24/2022	DATE -	REVISED -	

STATE OF ILLINOIS
DEPARTMENT OF TRANSPORTATION

FAP 800 (US 45) CROSS–SECTIONS

SCALE: 1" = 10' | SHEET 13 OF 26 SHEETS | STA. 232+50.00 R1 TO STA. 237+50.00 R1

F.A.P. RTE.	SECTION	COUNTY	TOTAL SHEETS	SHEET NO.
800	*	CHAMPAIGN	51	38
		CONTRACT NO. 70F56		
		ILLINOIS	FED. AID PROJECT	

* (28-X1, 29-X1)HSIP 22-2

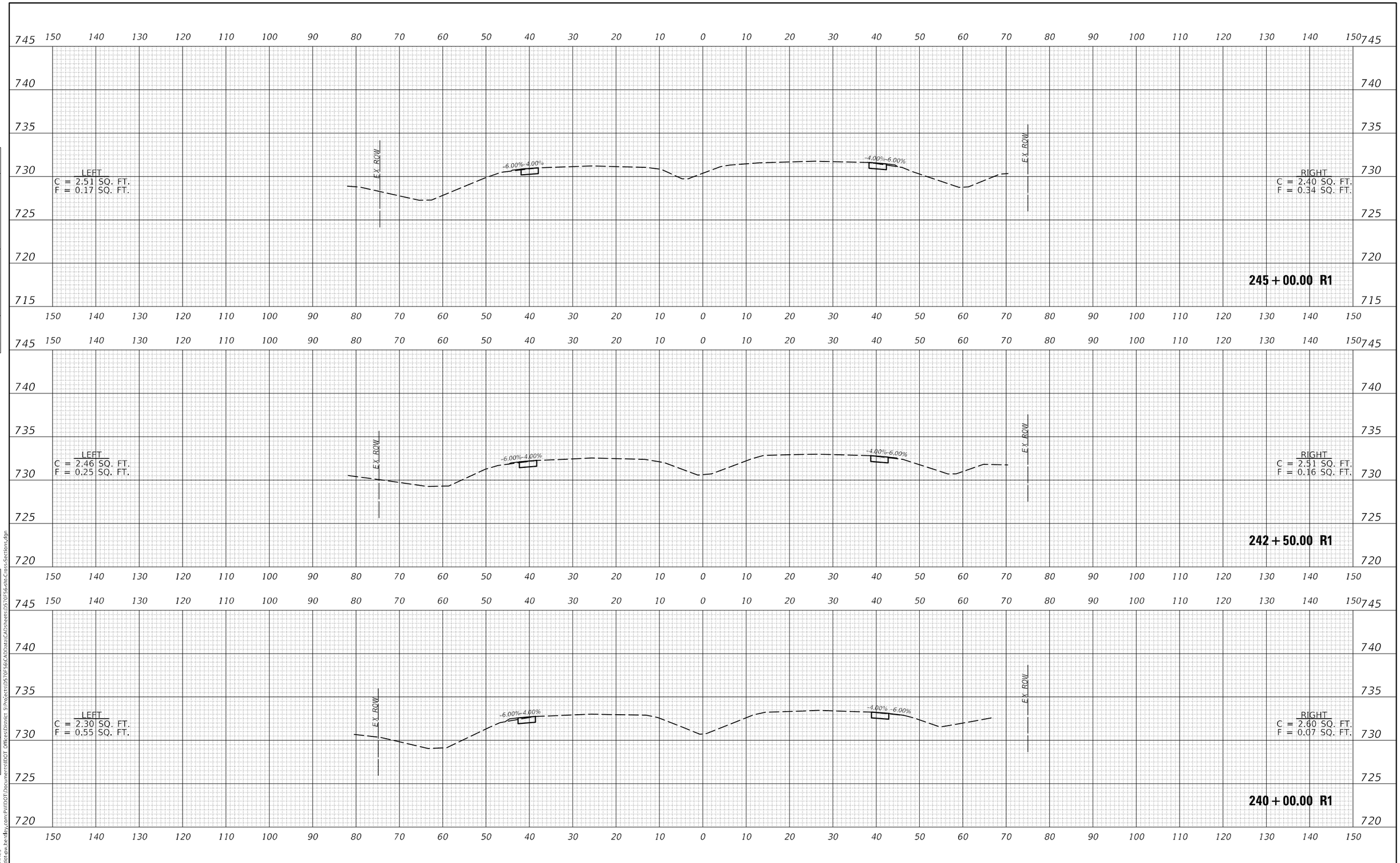

FINAL SURVEY		BY	DATE
NOTE BOOK	SURVEYED		
	PLOTTED		
	TEMPLATE		
	AREAS		
NO.	AREAS CHECKED		

ORIGINAL SURVEY		BY	DATE
NOTE BOOK	SURVEYED		
	PLOTTED		
	TEMPLATE		
	AREAS		
NO.	AREAS CHECKED		

MODEL: SMODELNAME5
FILE NAME: pw:\\ildot-pw.bentley.com:PWIDOT\Documents\IDOT Offices\District 5\Projects\D570F56\CAD\data\CAD\sheets\D570F56-Int-Cross-Sections.dgn

USER NAME = PiersonTJ	DESIGNED -	REVISED -	
	DRAWN -	REVISED -	
PLOT SCALE = 20.0000 ' / in.	CHECKED -	REVISED -	
PLOT DATE = 1/24/2022	DATE -	REVISED -	

STATE OF ILLINOIS
DEPARTMENT OF TRANSPORTATION

FAP 800 (US 45) CROSS–SECTIONS

SCALE: 1" = 10' | SHEET 14 OF 26 SHEETS | STA. 240+00.00 R1 TO STA. 245+00.00 R1

F.A.P. RTE.	SECTION	COUNTY	TOTAL SHEETS	SHEET NO.
800	*	CHAMPAIGN	51	39
		CONTRACT NO. 70F56		
		ILLINOIS	FED. AID PROJECT	

* (28-X1, 29-X1)HSIP 22-2

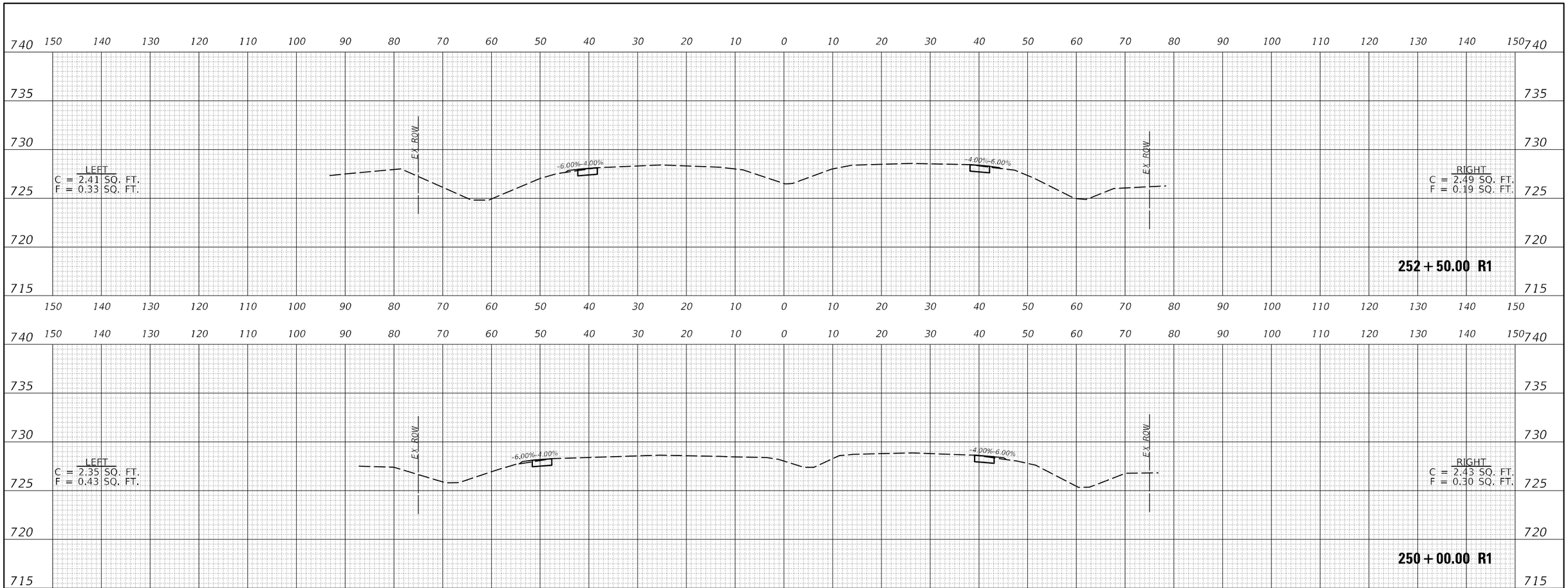

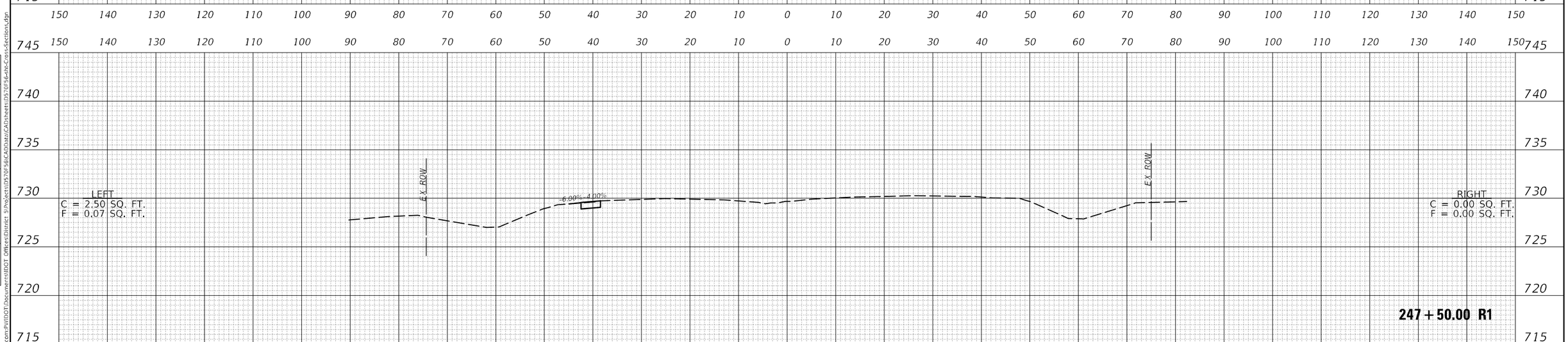

FINAL SURVEY	BY	DATE
SURVEYED		
PLOTTED		
TEMPLATE		
AREAS		
AREAS CHECKED		
NOTE BOOK NO.		

ORIGINAL SURVEY	BY	DATE
SURVEYED		
PLOTTED		
TEMPLATE		
AREAS		
AREAS CHECKED		
NOTE BOOK NO.		

MODEL: $MODEL NAME5
FILE NAME: pw:\\ildot-pw.bentley.com:PWIDOT\Documents\IDOT Offices\District 5\Projects\D570F56\CAD\data\CAD\sheets\D570F56-sht-Cross-Sections.dgn

USER NAME = PiersonTJ	DESIGNED -	REVISED -	
	DRAWN -	REVISED -	
PLOT SCALE = 20.0000 ' / in.	CHECKED -	REVISED -	
PLOT DATE = 1/24/2022	DATE -	REVISED -	

STATE OF ILLINOIS
DEPARTMENT OF TRANSPORTATION

FAP 800 (US 45) CROSS–SECTIONS

SCALE: 1" = 10' | SHEET 15 OF 26 SHEETS | STA. 247+50.00 R1 TO STA. 252+50.00 R1

F.A.P. RTE.	SECTION	COUNTY	TOTAL SHEETS	SHEET NO.
800	*	CHAMPAIGN	51	40
		CONTRACT NO. 70F56		
		ILLINOIS	FED. AID PROJECT	

* (28-X1, 29-X1)HSIP 22-2

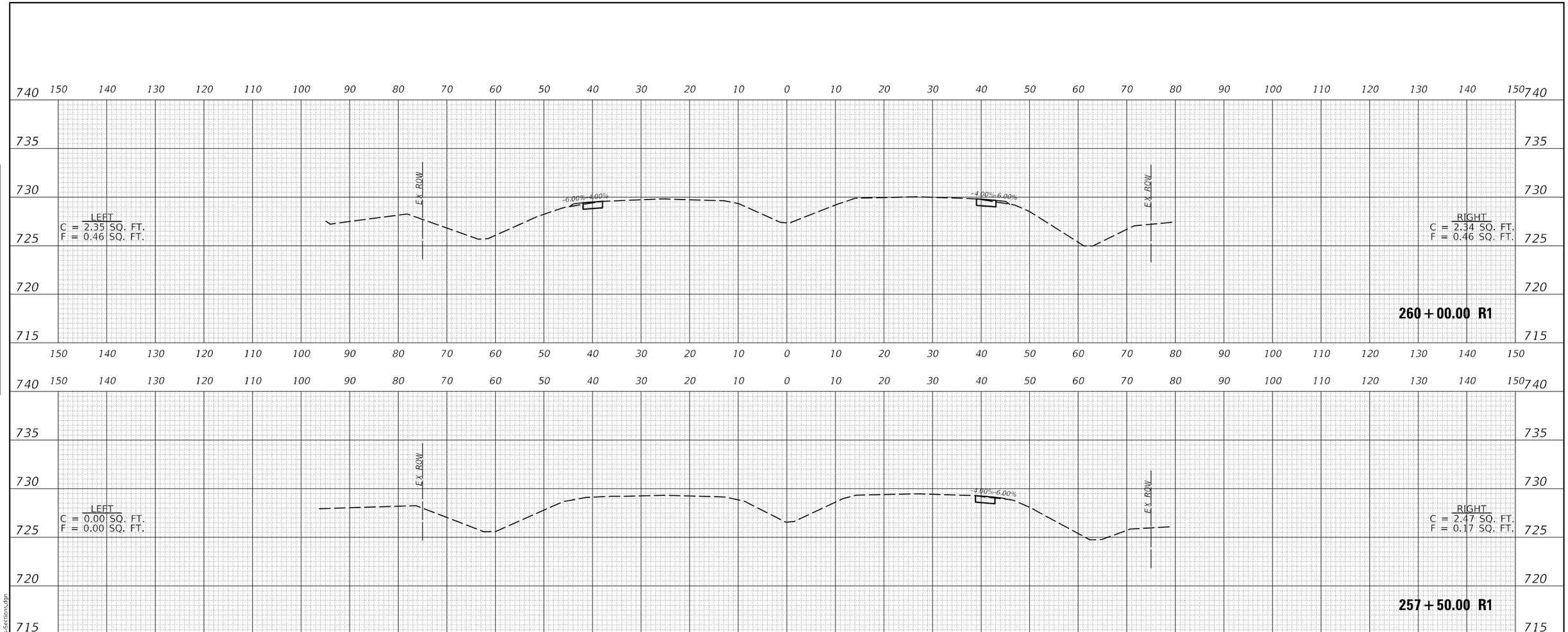

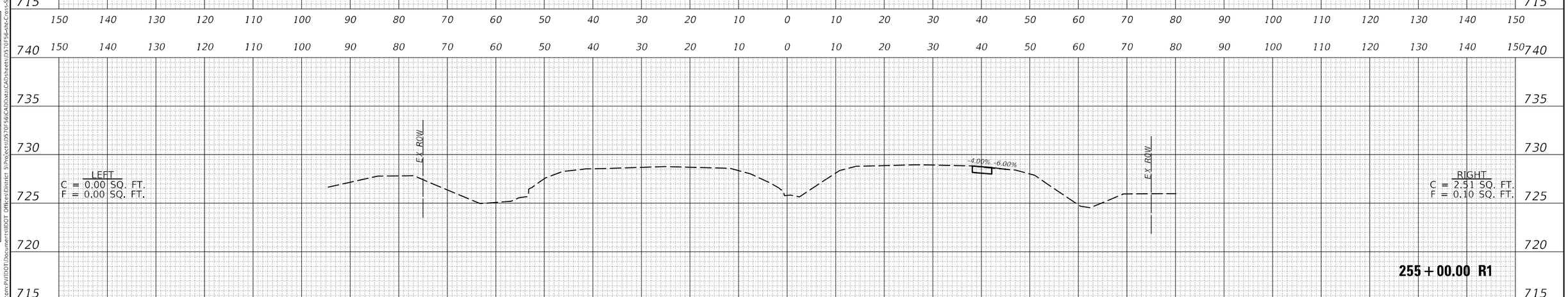

FINAL SURVEY	BY	DATE
SURVEYED		
PLOTTED		
TEMPLATE		
AREAS		
AREAS CHECKED		
NOTE BOOK NO.		

ORIGINAL SURVEY	BY	DATE
SURVEYED		
PLOTTED		
TEMPLATE		
AREAS		
AREAS CHECKED		
NOTE BOOK NO.		

MODEL: $MODELNAME$
FILE NAME: pw:\\ildot-pw.bentley.com:PWIDOT\Documents\IDOT Offices\District 5\Projects\D570F56\CAD\data\CADsheets\D570F56-sht-Cross-Sections.dgn

USER NAME = PiersonTJ	DESIGNED -	REVISED -	
	DRAWN -	REVISED -	
PLOT SCALE = 20.0000 ' / in.	CHECKED -	REVISED -	
PLOT DATE = 1/24/2022	DATE -	REVISED -	

STATE OF ILLINOIS
DEPARTMENT OF TRANSPORTATION

FAP 800 (US 45) CROSS-SECTIONS

SCALE: 1" = 10' | SHEET 16 OF 26 SHEETS | STA. 255+00.00 R1 TO STA. 260+00.00 R1

F.A.P. RTE.	SECTION	COUNTY	TOTAL SHEETS	SHEET NO.
800	*	CHAMPAIGN	51	41
		CONTRACT NO. 70F56		
		ILLINOIS	FED. AID PROJECT	

* (28-X1, 29-X1)HSIP 22-2

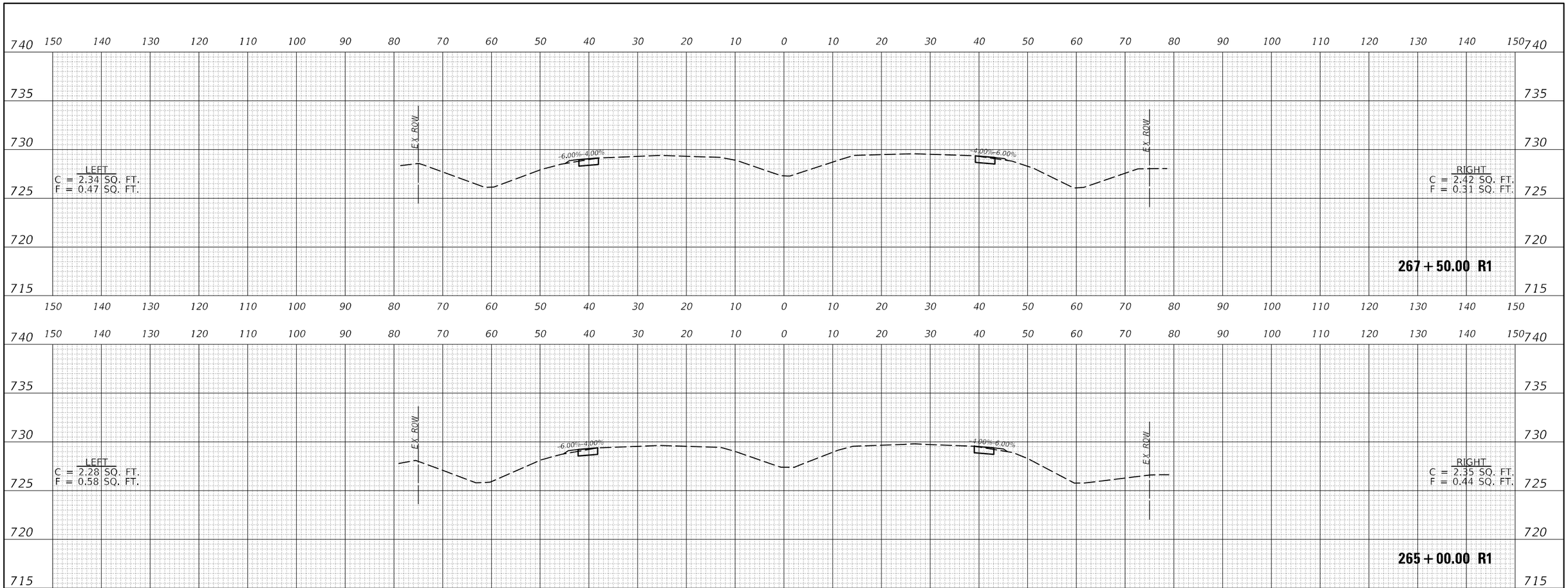

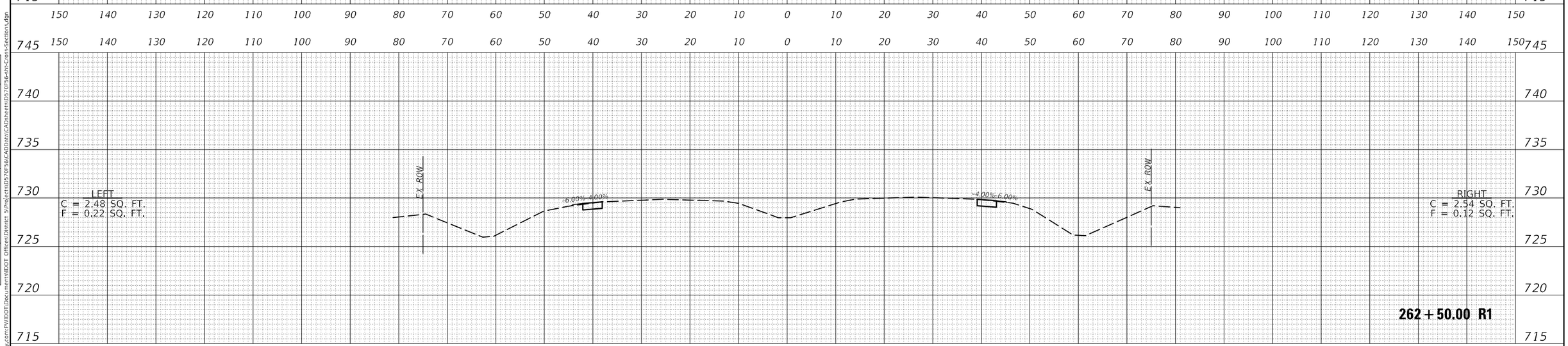

FINAL SURVEY	BY	DATE
SURVEYED		
PLOTTED		
TEMPLATE		
AREAS		
AREAS CHECKED		
NOTE BOOK NO.		

ORIGINAL SURVEY	BY	DATE
SURVEYED		
PLOTTED		
TEMPLATE		
AREAS		
AREAS CHECKED		
NOTE BOOK NO.		

MODEL: SMODELNAME5
FILE NAME: pw:\\ildot-pw.bentley.com:PWIDOT\Documents\IDOT Offices\District 5\Projects\D570F56\CAD\data\CAD\sheets\D570F56-sht-Cross-Sections.dgn

USER NAME = PiersonTJ	DESIGNED -	REVISED -	
	DRAWN -	REVISED -	
PLOT SCALE = 20.0000 ' / in.	CHECKED -	REVISED -	
PLOT DATE = 1/24/2022	DATE -	REVISED -	

STATE OF ILLINOIS
DEPARTMENT OF TRANSPORTATION

FAP 800 (US 45) CROSS–SECTIONS

SCALE: 1" = 10' | SHEET 17 OF 26 SHEETS | STA. 262+50.00 R1 TO STA. 267+50.00 R1

F.A.P. RTE.	SECTION	COUNTY	TOTAL SHEETS	SHEET NO.
800	*	CHAMPAIGN	51	42
		CONTRACT NO. 70F56		
		ILLINOIS	FED. AID PROJECT	

* (28-X1, 29-X1)HSIP 22-2

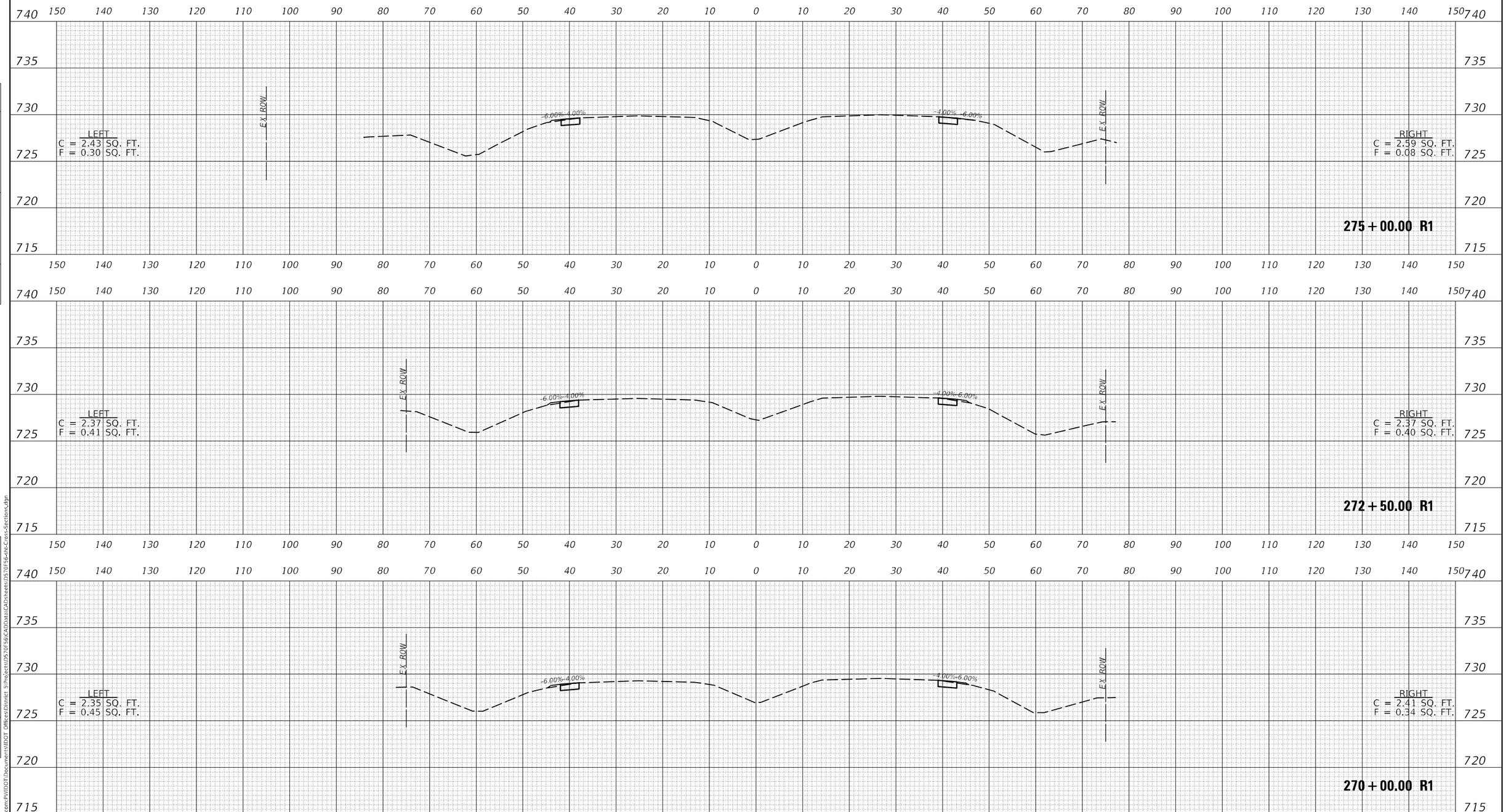

FINAL SURVEY	BY	DATE
SURVEYED		
PLOTTED		
TEMPLATE		
AREAS		
AREAS CHECKED		
NOTE BOOK NO.		

ORIGINAL SURVEY	BY	DATE
SURVEYED		
PLOTTED		
TEMPLATE		
AREAS		
AREAS CHECKED		
NOTE BOOK NO.		

MODEL: $MODEL NAME5
FILE NAME: pw:\\ildot-pw.bentley.com:PWIDOT\Documents\IDOT Offices\District 5\Projects\D570F56\CAD\data\CAD\sheets\D570F56-sht-Cross-Sections.dgn

USER NAME = PiersonTJ	DESIGNED -	REVISED -	
	DRAWN -	REVISED -	
PLOT SCALE = 20.0000 ' / in.	CHECKED -	REVISED -	
PLOT DATE = 1/24/2022	DATE -	REVISED -	

STATE OF ILLINOIS
DEPARTMENT OF TRANSPORTATION

FAP 800 (US 45) CROSS–SECTIONS

SCALE: 1" = 10' | SHEET 18 OF 26 SHEETS | STA. 270+00.00 R1 TO STA. 275+00.00 R1

F.A.P. RTE.	SECTION	COUNTY	TOTAL SHEETS	SHEET NO.
800	*	CHAMPAIGN	51	43
		CONTRACT NO. 70F56		
		ILLINOIS	FED. AID PROJECT	

* (28-X1, 29-X1)HSIP 22-2

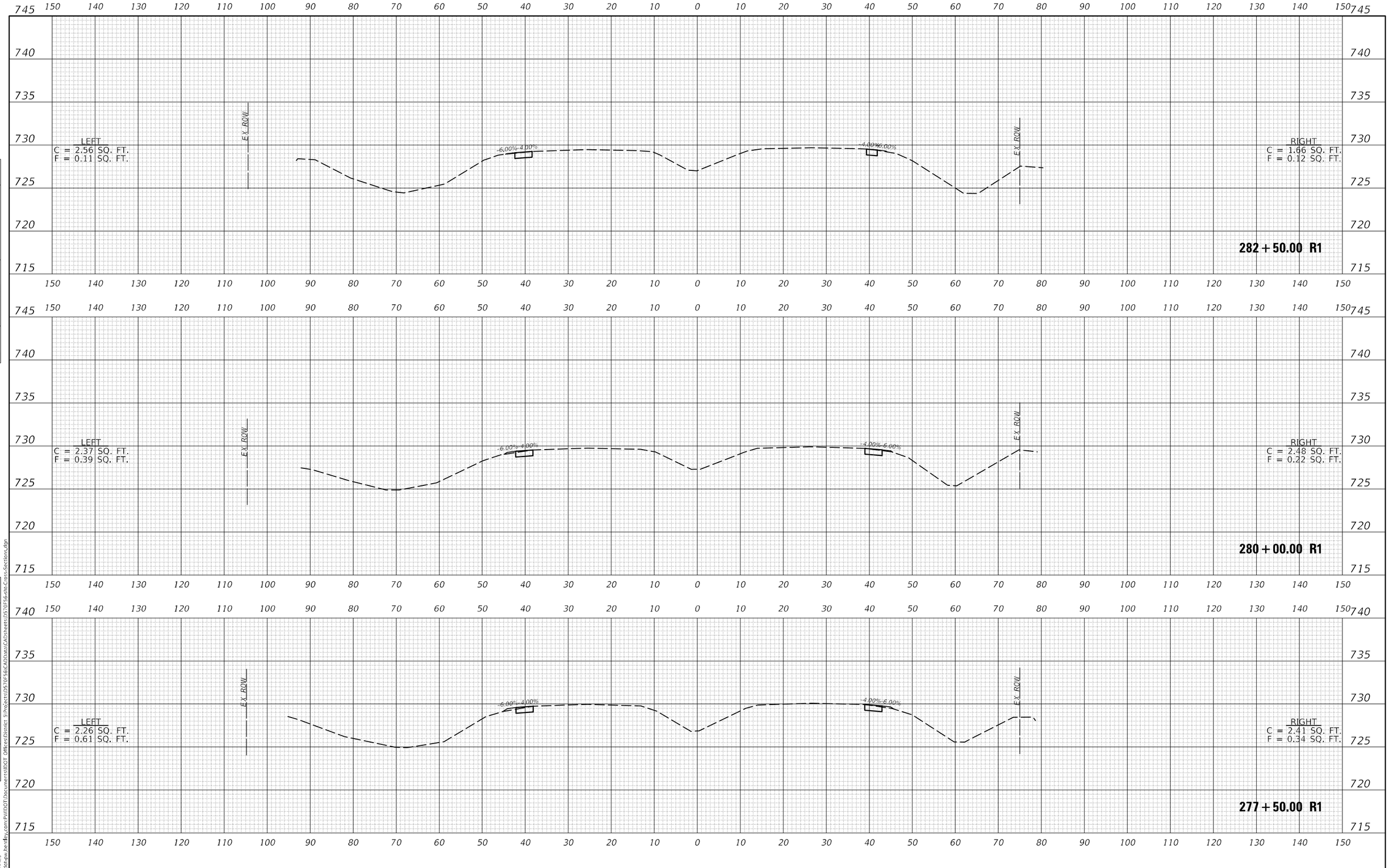

FINAL SURVEY	BY	DATE
SURVEYED		
PLOTTED		
TEMPLATE		
AREAS		
AREAS CHECKED		
NOTE BOOK		
NO.		

ORIGINAL SURVEY	BY	DATE
SURVEYED		
PLOTTED		
TEMPLATE		
AREAS		
AREAS CHECKED		
NOTE BOOK		
NO.		

MODEL: $MODEL NAME$
FILE NAME: pw:\\ildot-pw.bentley.com:PWIDOT\Documents\IDOT Offices\District 5\Projects\D570F56\CAD\data\CAD sheets\D570F56-sht-Cross-Sections.dgn

USER NAME = PiersonTJ	DESIGNED -	REVISED -	
	DRAWN -	REVISED -	
PLOT SCALE = 20.0000 ' / in.	CHECKED -	REVISED -	
PLOT DATE = 1/24/2022	DATE -	REVISED -	

STATE OF ILLINOIS
DEPARTMENT OF TRANSPORTATION

FAP 800 (US 45) CROSS-SECTIONS

SCALE: 1" = 10' | SHEET 19 OF 26 SHEETS | STA. 277+50.00 R1 TO STA. 282+50.00 R1

F.A.P. RTE.	SECTION	COUNTY	TOTAL SHEETS	SHEET NO.
800	*	CHAMPAIGN	51	44
		CONTRACT NO. 70F56		
		ILLINOIS	FED. AID PROJECT	

* (28-X1, 29-X1)HSIP 22-2

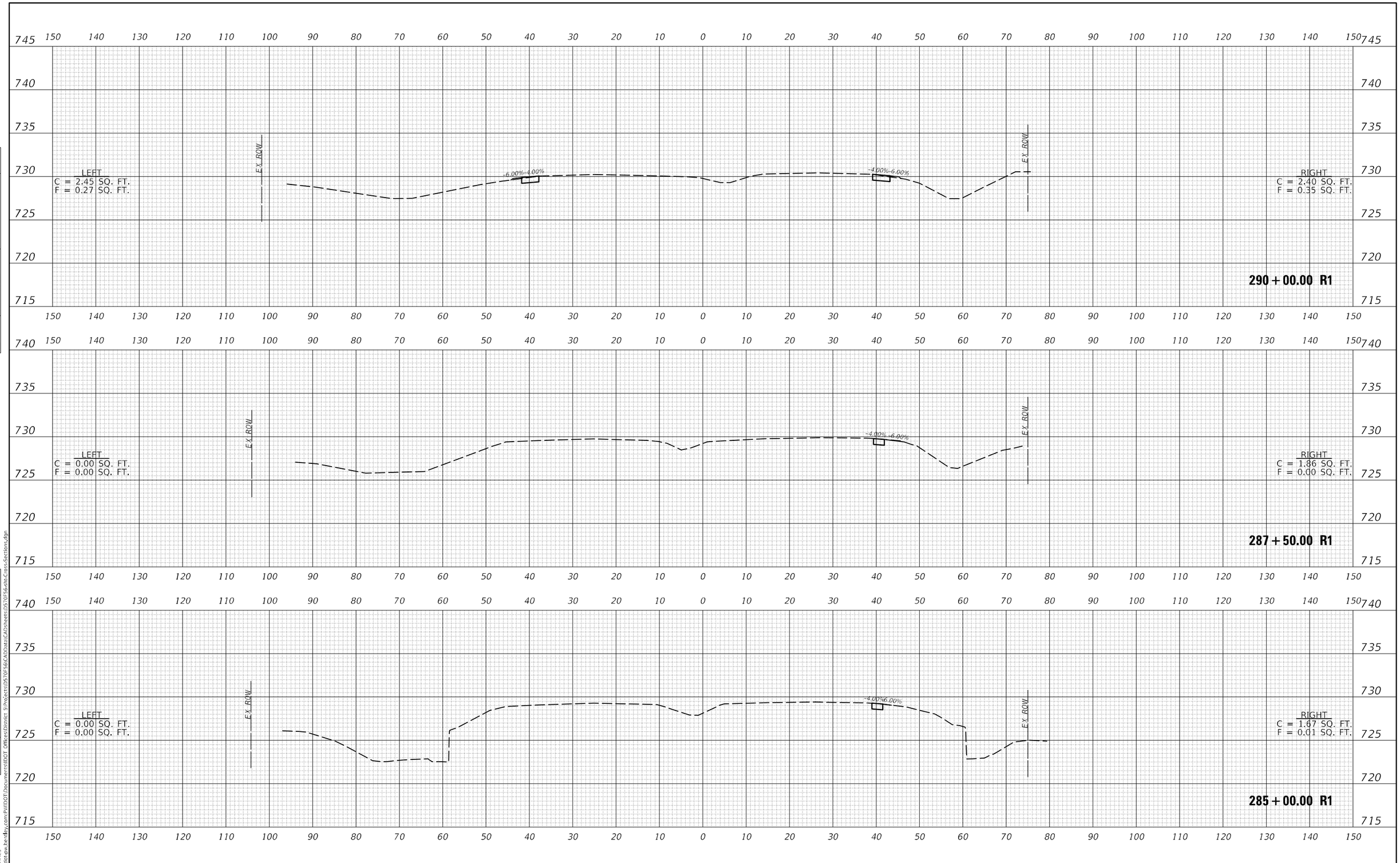

FINAL SURVEY	BY	DATE
SURVEYED		
PLOTTED		
TEMPLATE		
AREAS		
AREAS CHECKED		
NOTE BOOK NO.		

ORIGINAL SURVEY	BY	DATE
SURVEYED		
PLOTTED		
TEMPLATE		
AREAS		
AREAS CHECKED		
NOTE BOOK NO.		

MODEL: SMODELNAMES
FILE NAME: pw:\\ildot-pw.bentley.com:PWIDOT\Documents\IDOT Offices\District 5\Projects\D570F56\CAD\data\CAD\sheets\D570F56-sht-Cross-Sections.dgn

USER NAME = PiersonTJ	DESIGNED -	REVISED -	
	DRAWN -	REVISED -	
PLOT SCALE = 20.0000 ' / in.	CHECKED -	REVISED -	
PLOT DATE = 1/24/2022	DATE -	REVISED -	

STATE OF ILLINOIS
DEPARTMENT OF TRANSPORTATION

FAP 800 (US 45) CROSS–SECTIONS

SCALE: 1" = 10' | SHEET 20 OF 26 SHEETS | STA. 285+00.00 R1 TO STA. 290+00.00 R1

F.A.P. RTE.	SECTION	COUNTY	TOTAL SHEETS	SHEET NO.
800	*	CHAMPAIGN	51	45
		CONTRACT NO. 70F56		
		ILLINOIS	FED. AID PROJECT	

* (28-X1, 29-X1)HSIP 22-2

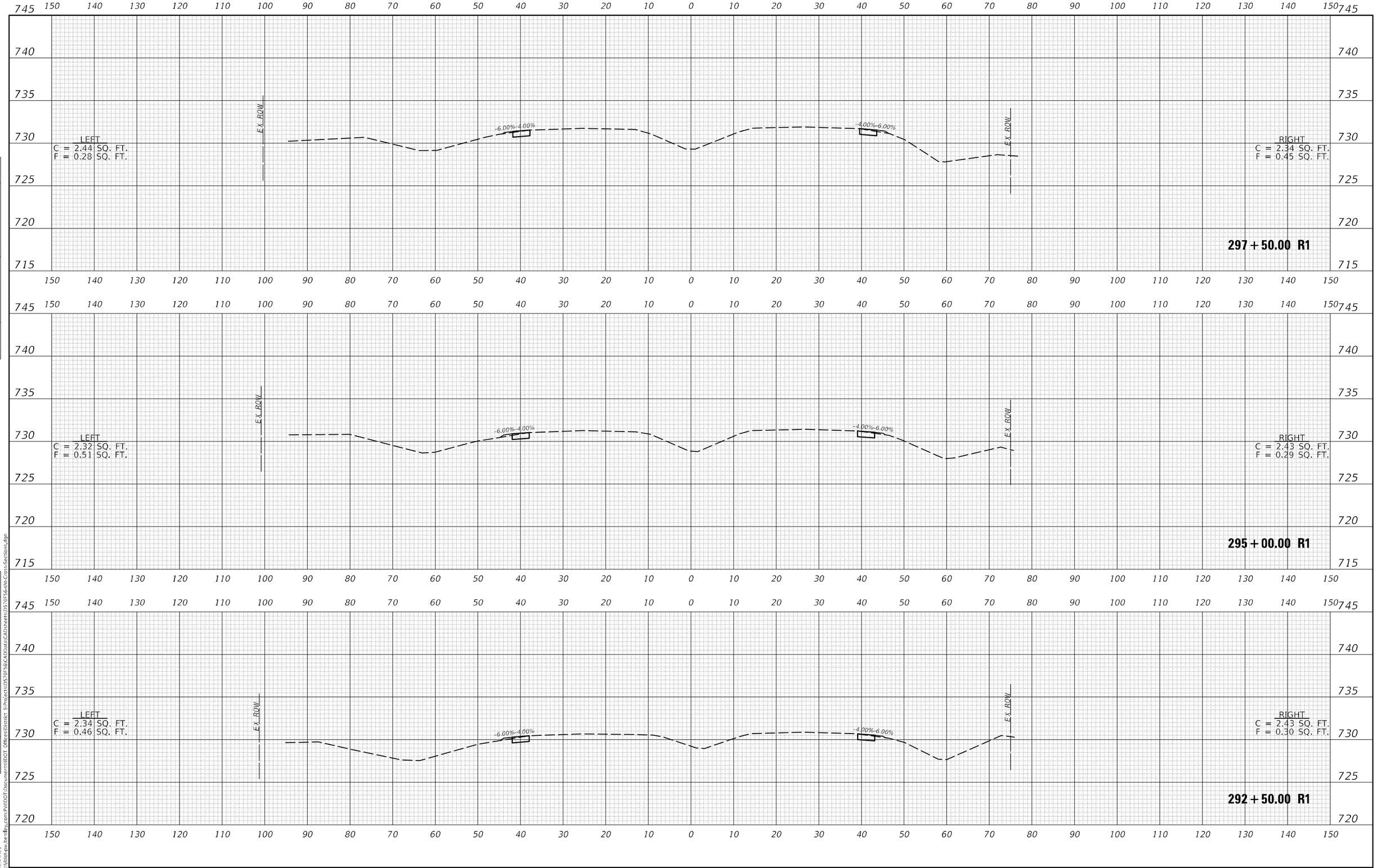

FINAL SURVEY	BY	DATE
SURVEYED		
PLOTTED		
TEMPLATE		
AREAS		
AREAS CHECKED		
NOTE BOOK NO.		

ORIGINAL SURVEY	BY	DATE
SURVEYED		
PLOTTED		
TEMPLATE		
AREAS		
AREAS CHECKED		
NOTE BOOK NO.		

MODEL: SMODELNAME
FILE NAME: pw:\\ildot-pw.bentley.com:PWIDOT\Documents\IDOT Offices\District 5\Projects\D570F56\CAD\data\CAD sheets\D570F56-sht-Cross-Sections.dgn

USER NAME = PiersonTJ	DESIGNED -	REVISED -	
	DRAWN -	REVISED -	
PLOT SCALE = 20.0000 ' / in.	CHECKED -	REVISED -	
PLOT DATE = 1/24/2022	DATE -	REVISED -	

STATE OF ILLINOIS
DEPARTMENT OF TRANSPORTATION

FAP 800 (US 45) CROSS–SECTIONS

SCALE: 1" = 10' | SHEET 21 OF 26 SHEETS | STA. 292+50.00 R1 TO STA. 297+50.00 R1

F.A.P. RTE.	SECTION	COUNTY	TOTAL SHEETS	SHEET NO.
800	*	CHAMPAIGN	51	46
		CONTRACT NO. 70F56		
		ILLINOIS	FED. AID PROJECT	

* (28-X1, 29-X1)HSIP 22-2

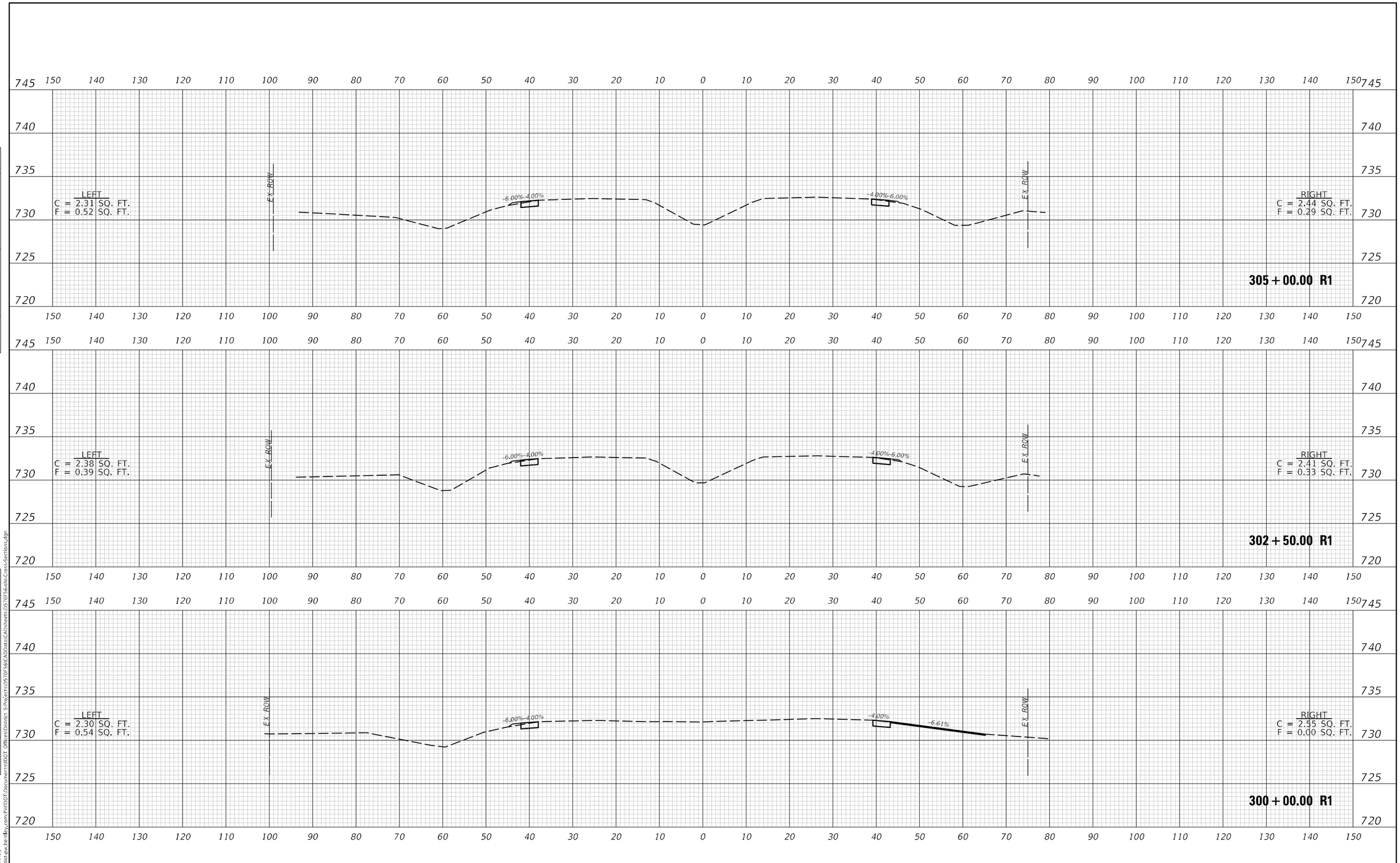

FINAL SURVEY	BY	DATE
SURVEYED		
PLOTTED		
TEMPLATE		
AREAS		
AREAS CHECKED		
NOTE BOOK NO.		

ORIGINAL SURVEY	BY	DATE
SURVEYED		
PLOTTED		
TEMPLATE		
AREAS		
AREAS CHECKED		
NOTE BOOK NO.		

MODEL: SMODELNAME5
FILE NAME: pw:\\ildot-pw.bentley.com:PWIDOT\Documents\IDOT Offices\District 5\Projects\D570F56\CAD\data\CAD\sheets\D570F56-tlt-Cross-Sections.dgn

USER NAME = PiersonTJ	DESIGNED -	REVISED -	
	DRAWN -	REVISED -	
PLOT SCALE = 20.0000 ' / in.	CHECKED -	REVISED -	
PLOT DATE = 1/24/2022	DATE -	REVISED -	

STATE OF ILLINOIS
DEPARTMENT OF TRANSPORTATION

FAP 800 (US 45) CROSS–SECTIONS

SCALE: 1" = 10' | SHEET 22 OF 26 SHEETS | STA. 300+00.00 R1 TO STA. 305+00.00 R1

F.A.P. RTE.	SECTION	COUNTY	TOTAL SHEETS	SHEET NO.
800	*	CHAMPAIGN	51	47
		CONTRACT NO. 70F56		
		ILLINOIS	FED. AID PROJECT	

* (28-X1, 29-X1)HSIP 22-2

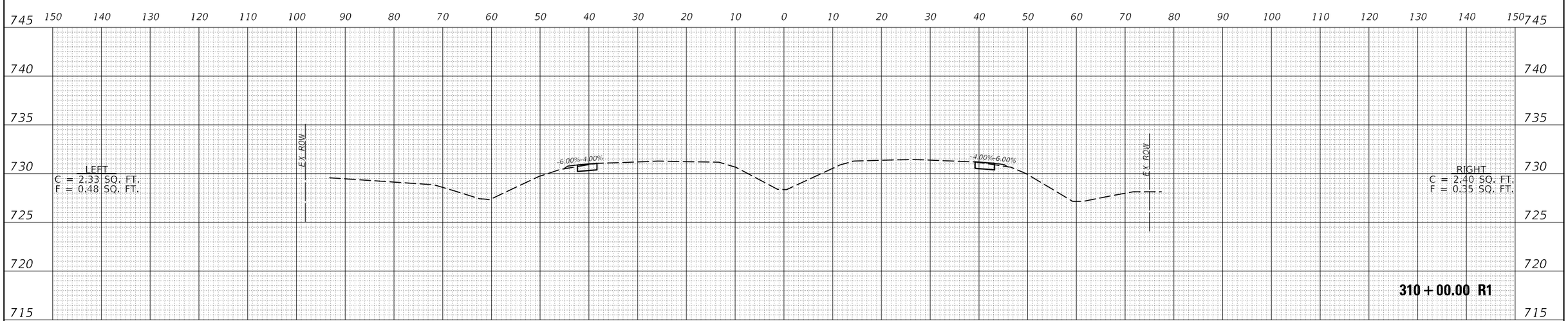

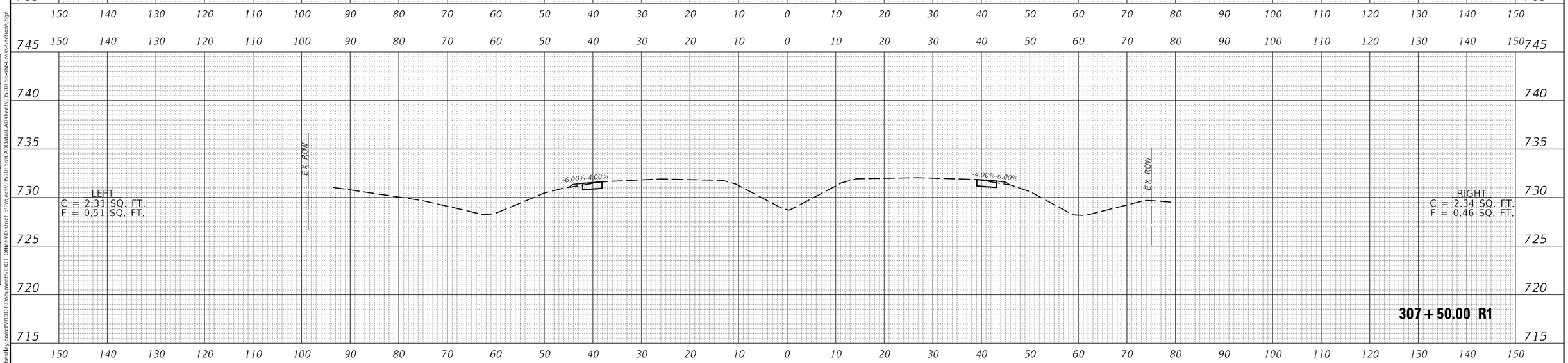

FINAL SURVEY		BY	DATE
	SURVEYED		
	PLOTTED		
NOTE BOOK	TEMPLATE		
	AREAS		
NO.	AREAS CHECKED		

ORIGINAL SURVEY		BY	DATE
	SURVEYED		
	PLOTTED		
NOTE BOOK	TEMPLATE		
	AREAS		
NO.	AREAS CHECKED		

MODEL: SMODELNAME5
FILE NAME: pw:\\ildot-pw.bentley.com:PWIDOT\Documents\IDOT Offices\District 5\Projects\D570F56\CAD\data\CAD\sheets\D570F56-sht-Cross-Sections.dgn

USER NAME = PiersonTJ	DESIGNED -	REVISED -	
	DRAWN -	REVISED -	
PLOT SCALE = 20.0000 ' / in.	CHECKED -	REVISED -	
PLOT DATE = 1/24/2022	DATE -	REVISED -	

STATE OF ILLINOIS
DEPARTMENT OF TRANSPORTATION

FAP 800 (US 45) CROSS–SECTIONS

SCALE: 1" = 10' | SHEET 23 OF 26 SHEETS | STA. 307+50.00 R1 TO STA. 310+00.00 R1

F.A.P. RTE.	SECTION	COUNTY	TOTAL SHEETS	SHEET NO.
800	*	CHAMPAIGN	51	48
		CONTRACT NO. 70F56		
		ILLINOIS	FED. AID PROJECT	

* (28-X1, 29-X1)HSIP 22-2

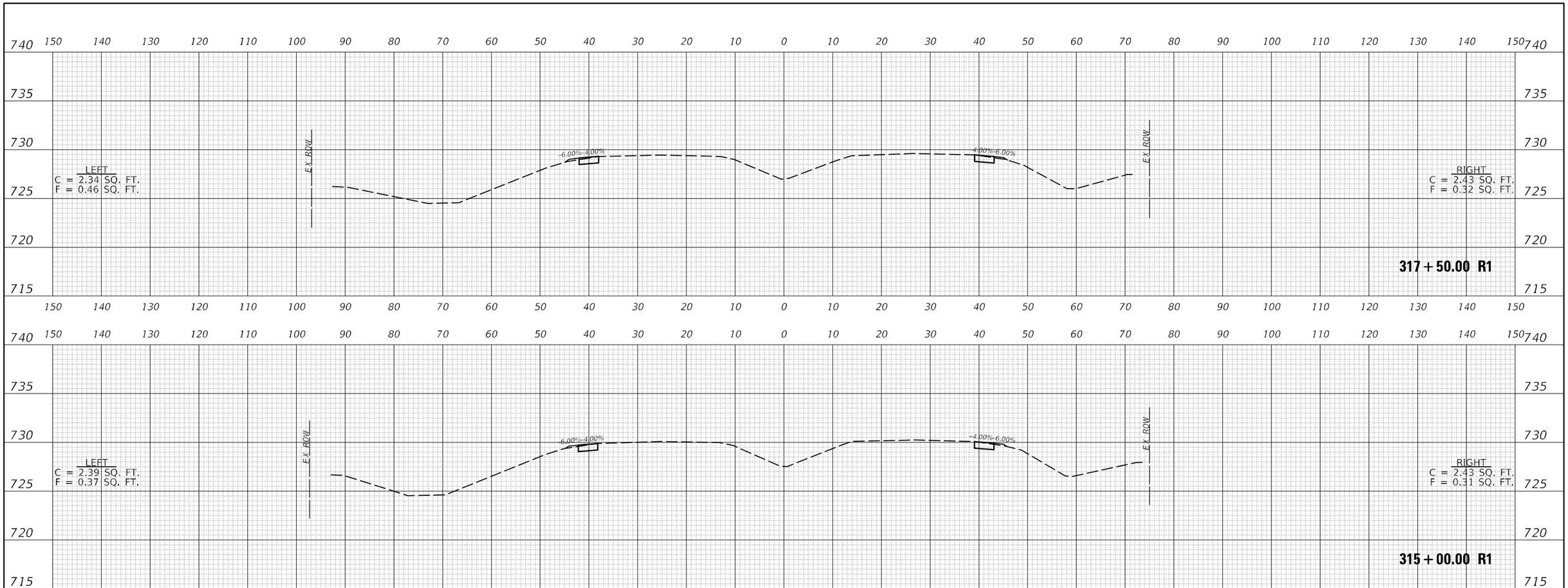

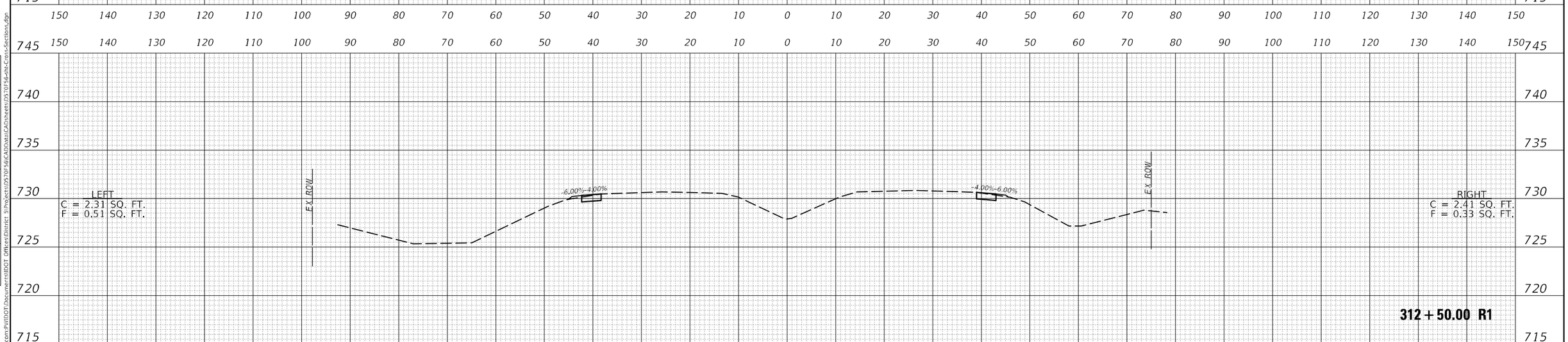

FINAL SURVEY	BY	DATE
SURVEYED		
PLOTTED		
TEMPLATE		
AREAS		
AREAS CHECKED		
NOTE BOOK NO.		

ORIGINAL SURVEY	BY	DATE
SURVEYED		
PLOTTED		
TEMPLATE		
AREAS		
AREAS CHECKED		
NOTE BOOK NO.		

MODEL: $MODEL$NAME5
FILE NAME: pw:\\ildot-pw.bentley.com:PWIDOT\Documents\IDOT Offices\District 5\Projects\D570F56\CAD\data\CAD sheets\D570F56-sht-Cross-Sections.dgn

USER NAME = PiersonTJ	DESIGNED -	REVISED -	
	DRAWN -	REVISED -	
PLOT SCALE = 20.0000 ' / in.	CHECKED -	REVISED -	
PLOT DATE = 1/24/2022	DATE -	REVISED -	

STATE OF ILLINOIS
DEPARTMENT OF TRANSPORTATION

FAP 800 (US 45) CROSS–SECTIONS

SCALE: | SHEET 24 OF 26 SHEETS | STA. 312+50.00 R1 TO STA. 317+50.00 R1

F.A.P. RTE.	SECTION	COUNTY	TOTAL SHEETS	SHEET NO.
800	*	CHAMPAIGN	51	49
		CONTRACT NO. 70F56		
		ILLINOIS	FED. AID PROJECT	

* (28-X1, 29-X1)HSIP 22-2

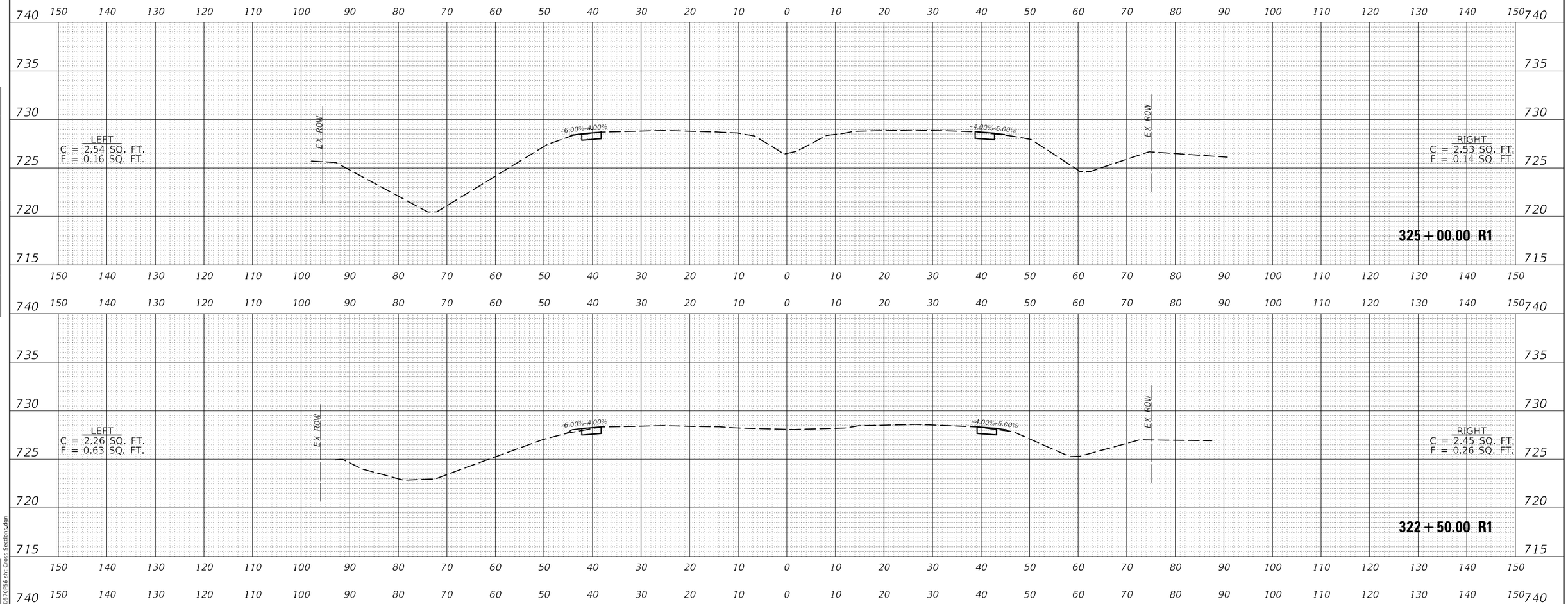

FINAL SURVEY	BY	DATE
SURVEYED		
PLOTTED		
TEMPLATE		
AREAS		
AREAS CHECKED		
NOTE BOOK NO.		

ORIGINAL SURVEY	BY	DATE
SURVEYED		
PLOTTED		
TEMPLATE		
AREAS		
AREAS CHECKED		
NOTE BOOK NO.		

MODEL: SMODELNAME
FILE NAME: pw:\\ildot-pw.bentley.com:PWIDOT\Documents\IDOT Offices\District 5\Projects\D570F56\CAD\data\CAD\sheets\D570F56-sht-Cross-Sections.dgn

USER NAME = PiersonTJ	DESIGNED -	REVISED -	
	DRAWN -	REVISED -	
PLOT SCALE = 20.0000 ' / in.	CHECKED -	REVISED -	
PLOT DATE = 1/24/2022	DATE -	REVISED -	

STATE OF ILLINOIS
DEPARTMENT OF TRANSPORTATION

FAP 800 (US 45) CROSS–SECTIONS

SCALE: | SHEET 25 OF 26 SHEETS | STA. 320+00.00 R1 TO STA. 325+00.00 R1

F.A.P. RTE.	SECTION	COUNTY	TOTAL SHEETS	SHEET NO.
800	*	CHAMPAIGN	51	50
		CONTRACT NO. 70F56		
		ILLINOIS	FED. AID PROJECT	

* (28-X1, 29-X1)HSIP 22-2

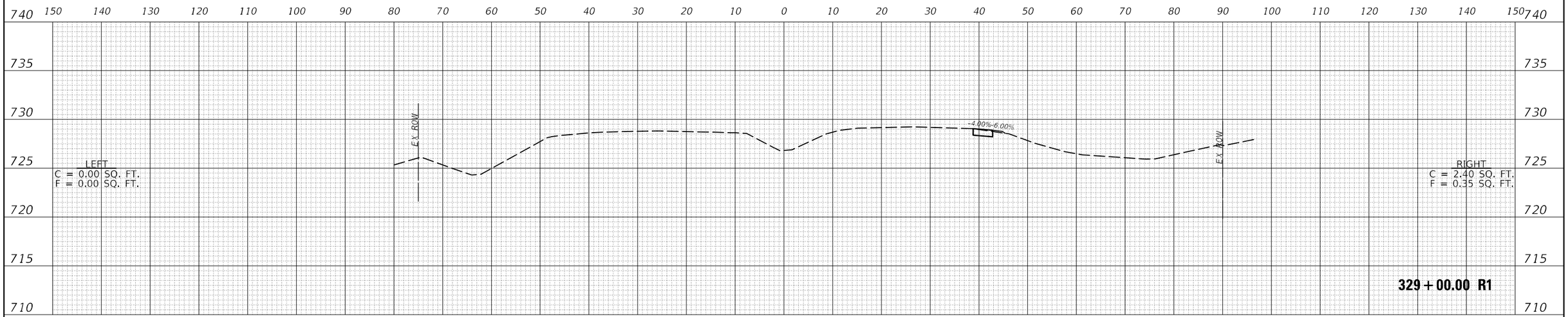

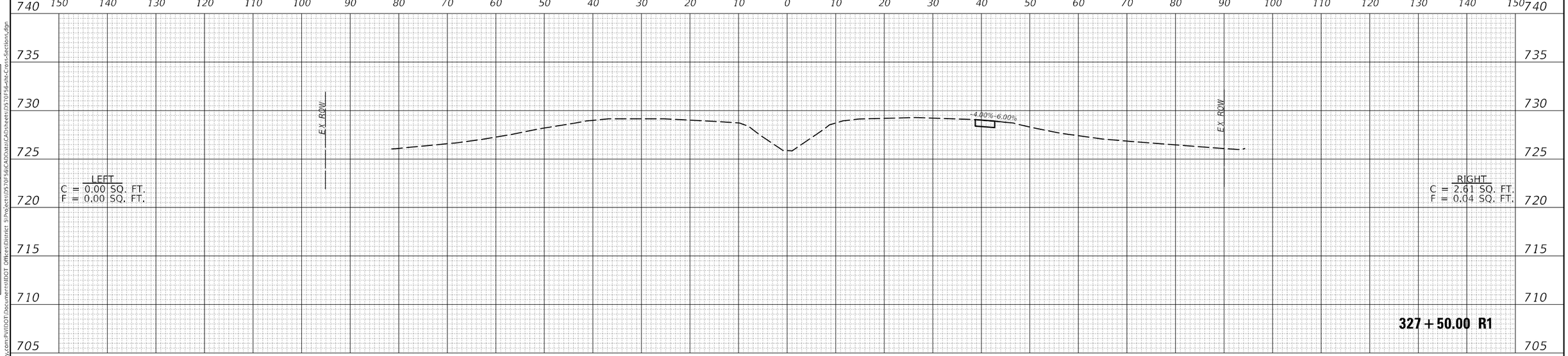

USER NAME = PiersonTJ	DESIGNED -	REVISED -	
	DRAWN -	REVISED -	
PLOT SCALE = 20.0000 ' / in.	CHECKED -	REVISED -	
PLOT DATE = 1/24/2022	DATE -	REVISED -	

STATE OF ILLINOIS
DEPARTMENT OF TRANSPORTATION

FAP 800 (US 45) CROSS-SECTIONS

SCALE: 1" = 10' | SHEET 26 OF 26 SHEETS | STA. 327+50.00 R1 TO STA. 329+00.00 R1

F.A.P. RTE.	SECTION	COUNTY	TOTAL SHEETS	SHEET NO.
800	*	CHAMPAIGN	51	51
		CONTRACT NO. 70F56		
		ILLINOIS	FED. AID PROJECT	

* (28-X1, 29-X1)HSIP 22-2

FINAL SURVEY | SURVEYED | PLOTTED | TEMPLATE | AREAS | AREAS CHECKED | NOTE BOOK | NO. | BY | DATE

ORIGINAL SURVEY | SURVEYED | PLOTTED | TEMPLATE | AREAS | AREAS CHECKED | NOTE BOOK | NO. | BY | DATE

MODEL: $MODELNAME$
FILE NAME: pw:\\ildot-pw.bentley.com:PWIDOT\Documents\IDOT Offices\District 5\Projects\D570F56\CADData\CADsheets\D570F56-ch-Cross-Sections.dgn